Labkotec Oy
Myllyhaantie 6
FI-33960 Pirkkala
FINLAND
Tel. +358 29 006 260
Fax +358 29 006 1260
Internet: www.labkotec.fi

27.1.2012
D15548_e

SolarSET S

Solar Powered Oil and Sand Separator Alarm Device

Operating and Installation Instructions

Copyright © 2012 Labkotec Oy All rights reserved

TABLE OF CONTENTS

1 GENERAL ... 3
2 OPERATION ... 4
3 SYSTEM COMPONENTS ... 5
3.1 LevelSET S Alarm and Communication Unit ... 6
3.2 SET/DM3DL Oil Sensor ... 7
3.3 SET/S2 Sludge Sensor ... 7
3.4 SET/V High Level Sensor ... 8
3.5 Xenon Beacon ... 8
3.6 True Delay Off Timer ... 8
3.7 Main Power and Operating Mode Switches ... 8
4 INSTALLATION ... 11
4.1 SolarSET S Alarm Unit ... 11
4.2 Connecting Sensors ... 11
5 COMMISSIONING AND COMMANDS (GSM VERSION ONLY) ... 12
5.1 Insert SIM Card to LevelSET S and turn power switch on ... 12
5.2 Set Administrator Phone Numbers ... 13
5.3 Set Alarm Recipient (End User) Phone Numbers ... 13
5.4 Set Device or Site Name (optional) ... 13
5.5 Set Date and Time (optional) ... 13
5.6 Set Date and Time for Scheduled Status Messages (optional) ... 13
5.7 Test SolarSET Functions with the Sensors ... 13
5.8 Factory Settings ... 14
5.9 Other Useful GSM Commands ... 14
6 TEST AND MAINTENANCE ... 16
7 TROUBLE-SHOOTING ... 17
7.1 SolarSET functionality test fails ... 17
7.2 Sensor functionality test fails ... 17
7.3 Device does not respond to SMS ... 17
8 TECHNICAL AND SAFETY DATA ... 18
APPENDIX A. FACTORY SETTINGS FOR SOLARSET OIL ALARM ... 19
APPENDIX B. CONNECTOR FLANGE ... 20
APPENDIX C. WIRING DIAGRAM ... 21

SYMBOLS

Warning / Attention

Pay special attention to installations at explosive atmospheres

Copyright © 2012 Labkotec Oy All rights reserved

1 GENERAL

SolarSET S is a solar-powered alarm and communication unit for monitoring the level of liquid hydrocarbon, sludge or high level in oil and sand separators or interceptors in locations where mains power is unavailable.

NOTE! This user manual includes operating and installation instructions for the following SolarSET S versions:

- SolarSET S GSM
- SolarSET S GSM with a Beacon
- SolarSET S Beacon
- SolarSET S Beacon with a True Delay Off Timer

The above mentioned SolarSET S alarm units are specifically designed to be used in the following applications:

- Oil Alarm for oil separators
- Sludge Alarm for sand separators
- Oil and Sludge Alarm for oil and sludge separators
- High Level and Oil Alarm in oil separators
- Any other combination of three sensors for oil, sludge and high level alarms.

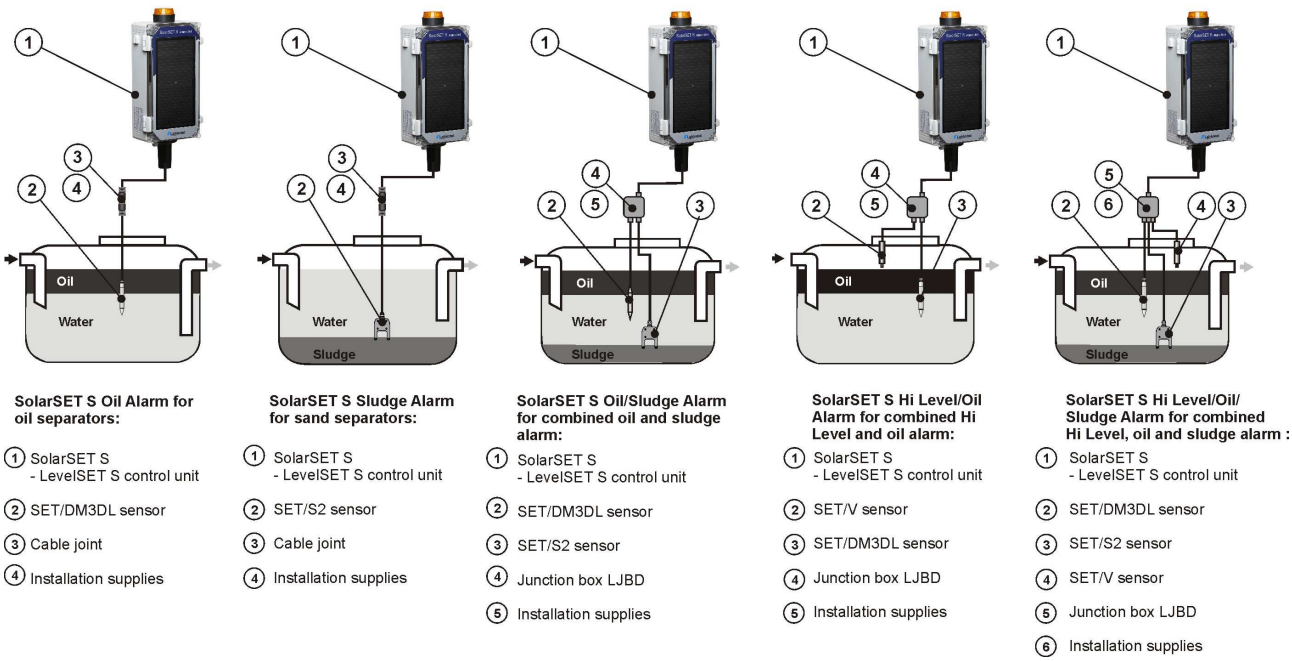

Figure 1. SolarSET S alarm device application examples

2 OPERATION

SolarSET S operates in low-power mode. Low-power mode means that the system is sleeping most of the time and wakes up e.g. every 60 minutes for 10-20 seconds to check the oil, sludge or high level in the separator. All operations are controlled by LevelSET S alarm unit.

SOLAR PANEL AND BATTERY

Solar panel charges the lead acid battery which powers the LevelSET S separator alarm unit. Charging of battery is controlled by a build in solar panel charge controller in LevelSET S.

In normal use (with the factory settings) there is no need for recharging or replacing the battery during its natural life time because of the sophisticated low-power function of the system. Battery life time is normally about 5 years.

SolarSET S will function at least 6 months without having any sunlight. When SolarSET S is equipped with a xenon beacon, the operational time will be much less in case of an alarm (see below).

Please note that battery life time and operational time of SolarSET S depends on many things like amount of solar energy per day and previous days, temperature, battery age and the settings of your SolarSET system. Operational times presented in this document are best estimates in particular cases.

TEXT MESSAGES (SolarSET S GSM)

In case of an oil, sludge or high level alarm, or sensor failure, SolarSET S sends an alarm message as a text message (SMS) to end user's mobile phone or to a SCADA system. Alarms are also visible locally inside SolarSET during the short wake-up period.

XENON BEACON

When SolarSET S is equipped with a flashing xenon beacon, the beacon will flash, in case of an alarm, once every 5 seconds until the alarm goes off. Alarm situation is checked again every 60 minutes like is the case when alarm is not active.

In case of an alarm, SolarSET is able to flash the beacon for about 10 days with no sun-light at all. In practise there is always some solar power available, so SolarSET may function much longer with no interruption at all.

TRUE DELAY OFF TIMER

A True Delay Off Timer is available as an optional interface for the connection of an external monitoring system or radio modem. The potential free relay output of the True Delay Off Timer is constantly energized in case of an alarm in the SolarSET S system.

RELAY OUTPUTS

NOTE! The relays of LevelSET S are not operational at all by default.

If switch S2/5 is set to position ON (fig 4), relays will energize for 1 sec after the measuring period in case of an alarm.

When SolarSET S is equipped with a flashing beacon, the relays control only the beacon and are not available for other purposes regardless of the position of switch S2/5.

Copyright © 2012 Labkotec Oy All rights reserved

3 SYSTEM COMPONENTS

SolarSET consists of a lockable IP65 polycarbonate housing containing LevelSET S Alarm Unit (12 VDC) with an in-build charge controller, 12 V / 7 Ah lead acid battery and operating switches.

Any combination of fail-safe sensors SET/DM3DL oil sensor, SET/S2 sludge sensor and SET/V high level sensor can be connected to the system. Standard sensor cable length is 5 meters and it's extendable to at least 300 meters.

The following table lists the possible components of different SolarSET applications. Details of each component are provided in the following chapters.

Every alarm unit / sensor combination can be equipped with GSM module, Flashing Xenon Beacon and True Delay Off Timer.

SolarSET Application	**Components**	
	Separator Alarm Unit	Sensor(s)
SolarSET S Oil Alarm	LevelSET S (12 VDC)	SET/DM3DL
SolarSET S Sludge Alarm	LevelSET S (12 VDC)	SET/S2
SolarSET S Oil/Sludge Alarm	LevelSET S (12 VDC)	SET/DM3DL SET/S2
SolarSET S Hi Level/Oil Alarm	LevelSET S (12 VDC)	SET/V SET/DM3DL
SolarSET S Hi Level/ Oil/Sludge Alarm	LevelSET S (12 VDC)	SET/V SET/DM3DL SET/S2

T
Table 1. SolarSET S alarm unit combinations

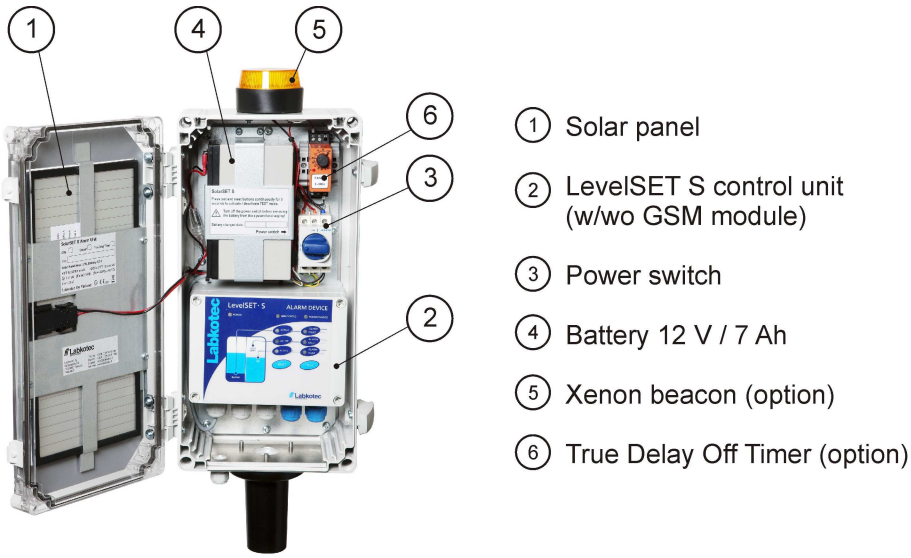

Figure 2. SolarSET S - System Components

3.1 LevelSET S Alarm and Communication Unit

SolarSET S operations are controlled by LevelSET S alarm unit. LevelSET S takes care of the low-power functions of the system, measures the sensor status, controls Beacon and GSM functions and takes care of solar panel and battery charging.

LevelSET S includes a built-in solar panel charge controller.

LevelSET S is an Ex-barrier and power supply unit for the sensors in oil and sand separators.

LevelSET S GSM version includes a built-in GSM modem and a built-in GSM antenna. An external antenna is also possible if signal quality is a problem. User is able to set and modify the settings of SolarSET with GSM text messages (SMS). SolarSET S factory settings are pre-set at the factory and can be taken into use with just one SMS.

LED indicators, push buttons and interfaces of the LevelSET S (12 VDC) control unit are described in figure 3.

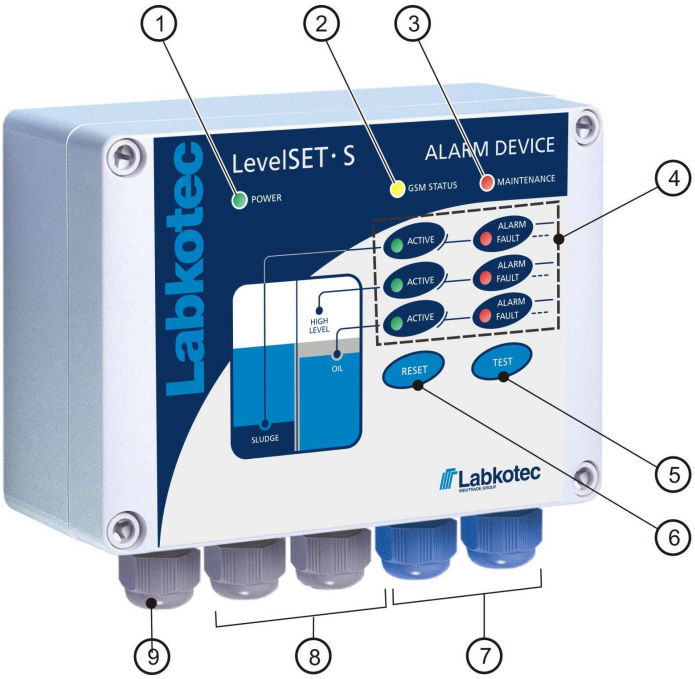

1. LED indicator for power supply (POWER)

2. LED indicator for GSM (GSM STATUS) (only units with modem)

3. LED indicator for maintenance (MAINTENANCE)

4. LED indicator for sensors
ACTIVE
- sensor in use
ALARM/FAULT
- lid when alarm
- blink when fault
LED indicator for sensor 1 is highest and LED indicator for sensor 3 is lowest.

5. Test button (TEST)

6. Reset button (RESET)

7. Sensor connections

8. Potential-free relay outputs 3 pc.

9. Supply voltage

Figure 3. LevelSET S control unit – features

Test and Reset buttons can be used to wake up LevelSET S from sleeping mode either to

- make a single measurement cycle (by pressing either of the buttons shortly) or
- wake up the system for an online test mode for maximum 15 minutes (by pressing both buttons simultaneously for couple of seconds)

Copyright © 2012 Labkotec Oy All rights reserved

3.2 SET/DM3DL Oil Sensor

SET/DM3DL oil sensor is installed into the light liquid storage chamber and gives an alarm when the chamber is filled to a pre-determined degree. The sensor is normally fully immersed in water.

Insert the sensor into the separator using the access point provided by the separator manufacturer. The sensor gives an alarm earliest when the upper electrode is in oil and latest when the sensor is totally immersed in a non-conductive liquid - in other words, it is totally away from the water.

Sensor can be mounted suspended from the ceiling of the separator by the cable. Please check the correct installation depth also from the instructions of the oil separator.

The function is based on the measurement of the electrical conductivity of the surrounding liquid – water conducts electricity much better than oil.

Oil separator is regarded as potentially explosive (Ex) area. SET/DM3DL sensor can be installed in a zone 0, 1 or 2 potentially explosive area but the SolarSET S control unit must be mounted in a safe area.

For more information, see SET/DM3DL operating and installation instructions.

3.3 SET/S2 Sludge Sensor

SET/S2 sensor is installed in the separator or tank and it gives an alarm when the sludge reaches the sensor. The sensor is normally immersed in water.

SET/S2 sensor gives an alarm when there is enough sand or sludge accumulated between the two heads of the sensor. When the sludge layer on the bottom of the separator or settling tank is pretty solid, the correct installation depth can be adjusted based on the current level. In case the level is not that clear, a tryout period of couple of days may be useful.

Sensor can be mounted suspended from the ceiling of the separator by the cable. Please check the correct installation depth also from the instructions of the oil separator.

The principle of measurement is ultrasonic. When sludge, sand or other solid particles accumulate between the two sensor heads, the signal strength weakens, causing an alarm.

SET/S2 sensor can be installed in a zone 0, 1 or 2 potentially explosive atmosphere but the control unit must be mounted in a safe area.

For more information, see SET/S2 operating and installation instructions.

Copyright © 2012 Labkotec Oy All rights reserved

3.4 SET/V High Level Sensor

SET/V sensor is installed above separator's outlet's upper level. It monitors the total level of the separator, regardless of existence of the oil layer or sludge in the separator.

The principle of measurement is ultrasonic. The sensor is normally in the air.

For more information, see SET/V operating and installation instructions.

3.5 Xenon Beacon

SolarSET S can be equipped with a xenon beacon for visual alarms. In case of an alarm, a highly visible signal is flashed once every 5 seconds.

Beacons' IP-rating is IP67, and it is mounted on the top of the SolarSET S enclosure by screws.

3.6 True Delay Off Timer

A True Delay Off Timer is available as an optional interface for the connection of external monitoring systems or radio modems. The potential free relay output of the True Delay Off Timer is constantly energized in case of an alarm in the SolarSET system.

True delay off timer is connected in parallel with the Xenon beacon, i.e. it will stay energized as long as the beacon is blinking constantly.

Delay of the timer is set to about 30 seconds

3.7 Main Power and Operating Mode Switches

Main power switch is located at the upper right corner of SolarSET enclosure (note 3 in figure 2). Power switch connects and disconnects both battery terminals and solar panel from system.

Main power switch much be in ON position during normal low-power operation. It is in OFF position during delivery.

The ***OPERATING MODES*** of SolarSET S are selected by the switches of LevelSET S, described in figure 4:

- Low-power mode is selected by switch S4/5
- Measuring interval is selected by switch S2/3

Copyright © 2012 Labkotec Oy All rights reserved

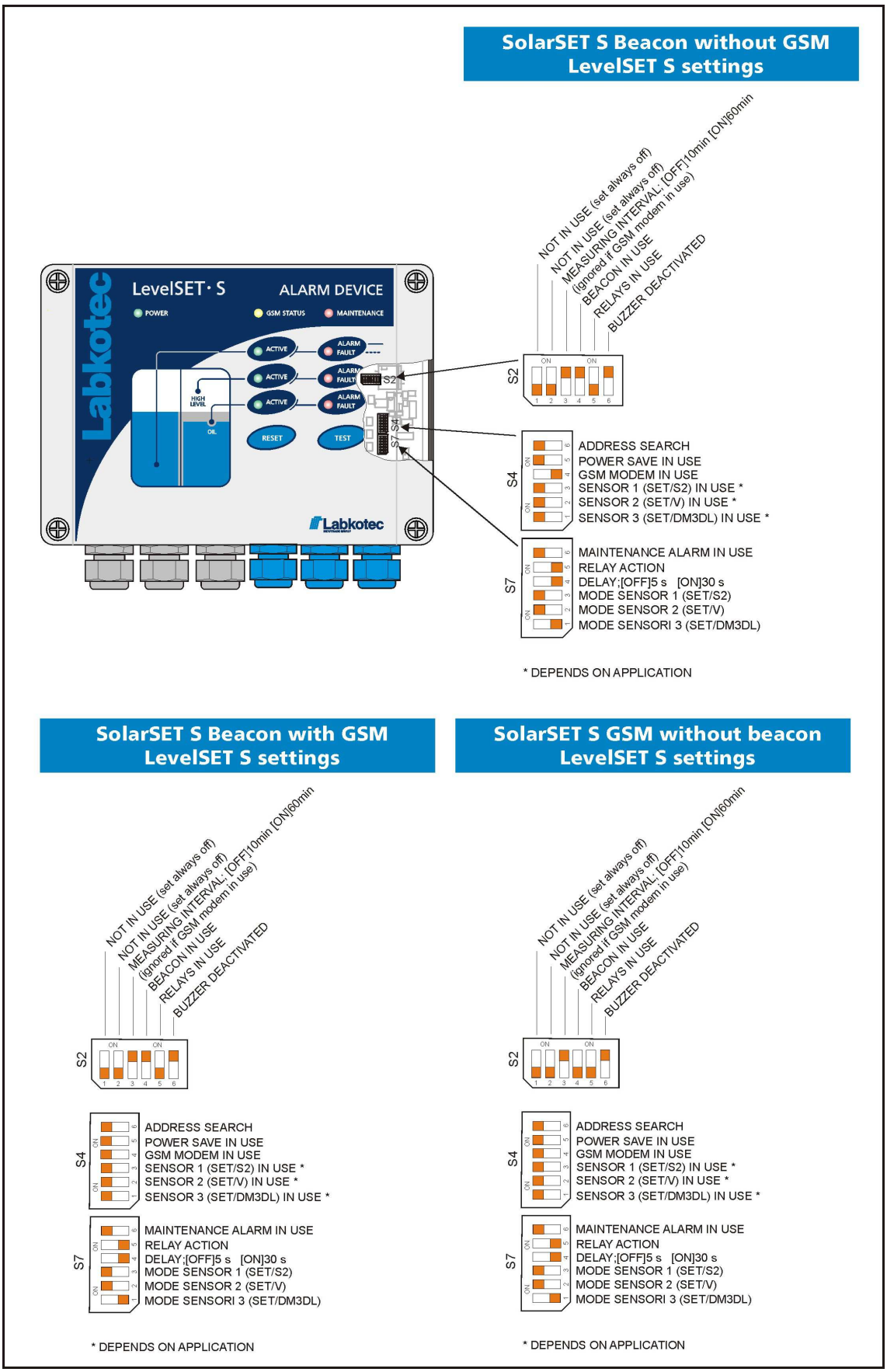

Figure 4. SolarSET S Operating Mode Switches

Test and Reset buttons of LevelSET S (see figure 3) can be used to wake up LevelSET S from sleeping mode either to

- make a single measurement cycle and start up the possible GSM modem for couple of minutes (by pressing either of the buttons shortly) OR
- wake up the system form online test mode for 15 minutes (by pressing both buttons simultaneously for couple of seconds). By pressing the buttons again simultaneously for a moment will return the system to sleeping mode.

Please, note that SolarSET consumes much more power in *Test* mode than in *Normal* (Low-power) mode.

Although SolarSET S returns automatically to low-power mode in 15 minutes, it is recommended to press to buttons to stop online mode right after the maintenance actions.

Copyright © 2012 Labkotec Oy

All rights reserved

4 INSTALLATION

4.1 SolarSET S Alarm Unit

SolarSET alarm device can be wall mounted or installed on a pedestal. The enclosure has mounting holes at each of the corners beneath the mounting holes of the front cover.

For pedestal installation, SolarSET is equipped with a connector flange (see Appendix E).

Orientate SolarSET as accurately as possible towards south and direct sunlight. Check the best possible installation angle (e.g. 68°) at your site. Pedestals or other mounting equipment are not delivered with the device.

All wiring, except sensor cables, of SolarSET is done already at the factory.

4.2 Connecting Sensors

Cabling of sensors to LevelSET S control unit inside the SolarSET S system is done either with a use of on in-line connector (cable joint) SK-3-2500 or junction box LJB3-78-83 or junction box LJB-D, as shown in the following pictures.

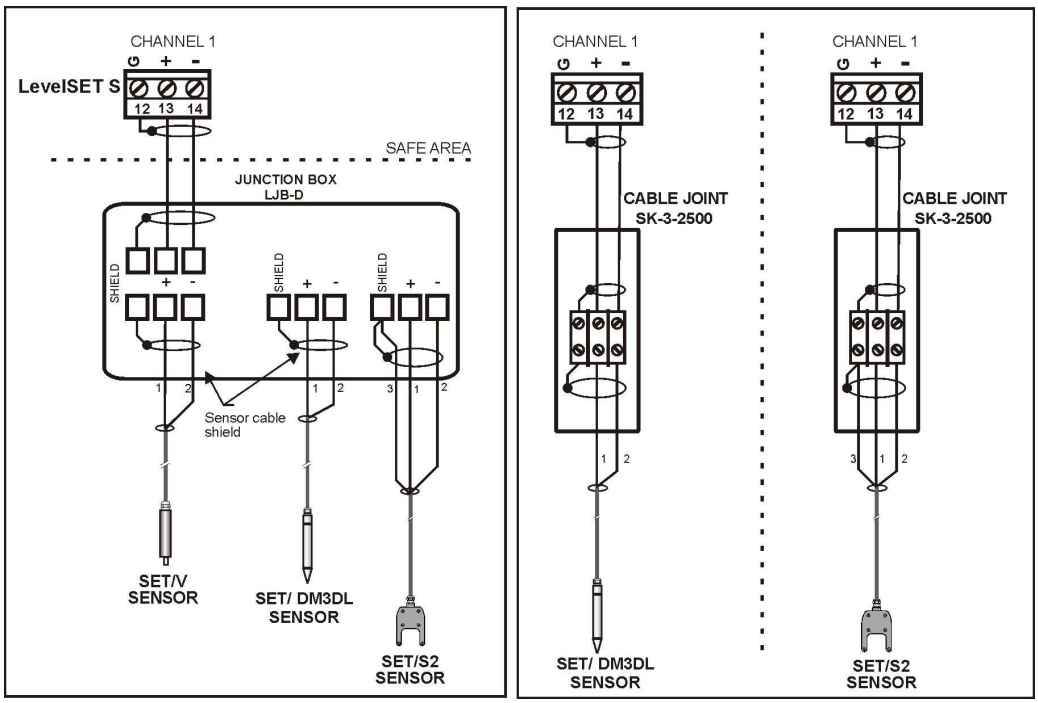

Figure 5. Connecting sensors to SolarSET S

Resistance of the wire used for equipotential grounding must be less than 1 Ω and cross section at least 4 mm² or 2 x 1.5 mm².

5 COMMISSIONING AND COMMANDS (GSM VERSION ONLY)

NOTE! This chapter is not relevant to SolarSET versions without GSM functionality.

SolarSET S parameters are already initialized at the factory. The factory settings (i.e. default parameters) are described in Appendix A.

While commissioning the SolarSET S, the user needs to take the following actions. Detailed instructions are given in the following chapters.

1. Insert SIM card to LevelSET S and turn power switch on
2. Set administrator phone numbers
3. Set alarm recipient (end user) phone numbers
4. Set device or site name (optional)
5. Set date and time (optional)
6. Set date and time for scheduled status messages (optional)
7. Test SolarSET S functions with the sensors

NOTE! SolarSET must be switched into *Test and Maintenance* -mode in order to fully power up the system. This is done either by pushing both test and reset buttons of LevelSET S for couple of seconds or by turning the switch S4/5 to rightmost position. *Power* switch must be ON.

5.1 Insert SIM Card to LevelSET S and turn power switch on

Deactivate the PIN code query from the SIM card by placing it into your own mobile phone. Send some test text messages to see that the SIM card works.

Make sure that the device is not energized.

1. Open the front panel of the device.
2. Slide the SIM card holder of the device, and the holder opens up.

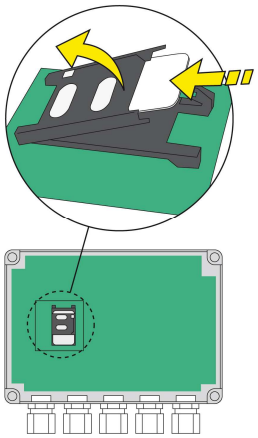

Figure x: Placing the SIM card into the LevelSET S GSM device

3. Place the SIM card into the holder with the metal contact surface pointing downwards.
4. Press the holder down.
5. Re-attach the front panel.

A yellow GSM STATUS LED indicator in the LevelSET S front panel will blink slowly when modem is connected to GSM network.

5.2 Set Administrator Phone Numbers

When given an administrator role, user is able to change any parameter of LevelSET S.

Administrator phone numbers can be set with command.

OPTEL +44xxxxxxxxxx

Multiple numbers (max. 5) can be set as follows:

OPTEL +44xxxxxxxxxx +44yyyyyyyyyy +44zzzzzzzzzz

NOTE! If administrators are not set, all users can change parameters. After at least one administrator number is set, only the administrator can change the settings. Use international format (e.g. +44…).

5.3 Set Alarm Recipient (End User) Phone Numbers

Alarm messages are sent to end user phone numbers.

Maximum of 10 end user numbers can be set with the following message:

TEL +44xxxxxxxxxx +44yyyyyyyyyy

5.4 Set Device or Site Name (optional)

Device name is visible as the first text in every message to tell the user where the alarm came. Device name (e.g. *Airport ABC)* can set with command

NAME Airport ABC

Name can be max. 20 characters long including space characters.

5.5 Set Date and Time (optional)

LevelSET S keeps its internal clock in time even when it is in low-power mode. Date and time is important only if you want to receive scheduled status message of the system at a certain time of day.

Date and time is set with command:

CLOCK 10.1.2012 11:00

(Format is dd.mm.yyyy hh:min).

5.6 Set Date and Time for Scheduled Status Messages (optional)

It might be useful to command SolarSET S to send a status message regularly e.g. once a week to ensure that the device is functioning properly. With command

TXD 7 10:00

SolarSET sends e.g. the following status message once a week at 10:00 starting from the moment when TXD command was executed.

"Airport ABC

Sludge probe: Alarm off

HiLevel probe: Alarm off

Oil probe: Alarm on"

5.7 Test SolarSET Functions with the Sensors

SolarSET status can be asked by sending the measurement query:

M

to SolarSET. (Example is from SolarSET S Oil Alarm)

When sensor is connected and totally immersed in water, SolarSET should reply:

"Airport ABC

Oil probe: Alarm off"

When sensor is connected and it is either immersed in oil or in air, SolarSET should reply:

"Airport ABC

Oil probe: Alarm on"

When sensor is not connected, SolarSET should reply:

"Airport ABC

Oil probe: Fault alarm on"

NOTE! Most of the parameters, including the above SMS text fields, of the SolarSET are set already at the factory. Factory settings can be programmed with the commands that are listed in the following chapters.

5.8 Factory Settings

SolarSET S units are delivered with defined factory settings. Settings are done with switches inside LevelSET S and with text message commands when SolarSET S GSM version is concerned.

Factory settings of LevelSET s switches are described in chapter 3.7.

5.8.1 Factory Settings Command through GSM

Factory settings of SolarSET S GSM version can be set with a single command:

SOLARSET FACTORY SETTINGS

Response to this command is:

"SOLARSET FACTORY SETTINGS RESTORED."

This command will set sensor names and alarm text information as described in appendix A. This command has been executed already at the factory.

5.9 Other Useful GSM Commands

Please note that, in *Normal* mode, SolarSET S is sleeping most of the time and will activate the GSM modem only in case of an alarm and once a day based on the Listening interval (LI) parameter.

In *Test and Maintenance* mode text messages are sent within normal GSM network delay.

5.9.1 Battery Voltage Query

To check the SolarSET battery voltage, send the following command:

BATVOLT

The device replies as follows (name and battery voltage varies):

"Airport ABC BATVOLT 12.90V"

5.9.2 Query Format of Commands

All parameters of SolarSET can be asked by sending it the particular command (i.e. the first part of the command) with no parameters.

Copyright © 2012 Labkotec Oy All rights reserved

E.g. device name can be asked with command

NAME

E.g. time of SolarSET clock can be asked with command

CLOCK

E.g. measuring interval of SolarSET can be asked with command

MI

More information about the format of each command can be found from LevelSET S Operating and Installation Instructions.

Copyright © 2012 Labkotec Oy

All rights reserved

6 TEST AND MAINTENANCE

The functionality of the SolarSET S should be checked always after the installation and commissioning.

The following test procedures can also be executed whenever visiting the site. The test procedure below describes an oil separator alarm but it applies as well to sand separator alarms and to systems with more than one sensor as long as sensor specific issues are taken into account.

TEST PROCEDURE #1

1. Switch SolarSET S into Test and Maintenance mode by pressing both Test and Reset buttons simultaneously until Active LEDS start blinking. *In case of GSM version, wait for some 30 seconds until GSM modem is registered into network.*
2. Press test button on LevelSET S. During this all the LEDs and buzzer should be on. If relays are in use (switch S2/5 is ON) they will energize in couple of seconds. In case of beacon: Beacon will start flashing.
3. After few seconds *- In case of GSM: all LEDs started blinking. Release the test button. An alarm message will be send to user's mobile phone.*
4. All LEDs should go blind (if there is no alarms) and relays energize. Beacon will stop flashing in case it is in use.
5. Approx. in 20 sec a message should appear on user's mobile phone. The message is similar to the response for an alarm message query (querying alarm data), but the message includes the text "Test" after the device name.
6. Switch SolarSET back to Normal (low-power) mode by pressing both Test and Reset buttons.

Table 1. SolarSET functionality test

TEST PROCEDURE #2

1. Switch SolarSET into Test and Maintenance mode.
2. Immerse oil sensor into water. LevelSET S should have no alarms.
3. Lift the sensor up in air or oil. LevelSET should indicate an Oil alarm *- In case of GSM: SolarSET should send an alarm text message "Alarm on"* *- In case of Beacon: Beacon will start flashing.*
4. Immerse the sensor back into water. The alarm should go off in couple of seconds *- In case of GSM: An SMS "Alarm off"" is sent to end users* *- In case of Beacon: Beacon will stop flashing*
5. Clean up the sensor before placing it back into the oil separator.
6. Switch SolarSET back to Normal (low-power) mode.

Table 2. Sensor functionality test

NOTE! SolarSET S will go automatically to low-power mode in 15 minutes after turning into Test and Maintenance mode. However, it's recommended to switch SolarSET manually to Normal mode right after the test to consume battery.

Copyright © 2012 Labkotec Oy All rights reserved

7 TROUBLE-SHOOTING

7.1 SolarSET functionality test fails

If no text messages are received (in GSM version) or beacon is not flashing (in Beacon version), check that the position of switches is as described in chapter 3.7.

7.2 Sensor functionality test fails

Clean up the sensor and place it back on its place. Repeat the test again. If functionality is not recovered, contact your sales representative.

7.3 Device does not respond to SMS

1. Make sure that the GSM modem is registered to network. A yellow LED in the LevelSET S front panel is blinking slowly if modem is on-line. You can always try calling the device phone number.

   If the LED is not blinking, the modem has no access to GSM network. Remove the SIM card, put it to your own phone and make sure that the PIN code is deactivated.

2. If there is no power at all, make sure that the battery is not empty. The battery voltage should be checked with a voltmeter. Battery terminals are visible in Appendix C (poles 3 and 5 of Power switch). If battery is drained for some reason, the terminal voltage can drop below specified rating. Make sure that the voltage does not decrease below 11.5 V.

   CAUTION! Be careful when operating with the battery, it can drive dangerously high electric currents. Short-circuiting the battery is dangerous.

3. If the device has been functional, but stops responding on its own, the signal strength should be tested. This can be done by sending message *CSQ* to SolarSET. If the response gives CSQ-value above 10, the signal strength should not be a problem. If there is no response, the signal can be so weak that the response cannot be sent.

4. If there is enough power and the GSM modem is registered to GSM network, it's possible that your phone number is not on the administrator list. There is, however, one way to get back to the administrator list.

   First send a message *SOPTEL 1234 +xxxxxxx*, where *+xxxxxxx* is your own phone number. SolarSET does not answer to this email.

   Finally, set yourself as the operator with command *OPTEL +xxxxxxx*.

8 TECHNICAL AND SAFETY DATA

SolarSET alarm unit	
Dimensions	200 mm x 400 mm x 132 mm (L x H x D)
Enclosure	Material: polycarbonate IP rating: IP 43 with two ventilation device
Ambient temperature	-30 ºC…+60 ºC
Battery	12 VDC, 7 Ah lead-acid battery
Power consumption	Max 1,9 VA Typical 0,1 mVA (on low-power mode)
Alarm indication	GSM text message AND/OR Xenon beacon AND/OR Potential free relay output (True delay off timer
Alarm and Communication Unit	LevelSET S (12 VDC) with or without GSM modem (See chapter 3. System Components)
Sensors	SET/DM3DL and/or SET/S2 and/or SET/V (See chapter 3. System Components)
Max. impedance of the current loop between the control unit and a sensor	75 Ω.
Ex-classification ATEX IECEx	LevelSET S control unit: Ex II (1) G [Ex ia] II B (Ta = -30 ºC…+60 ºC) VTT 09 ATEX 027X IECEx VTT 10.0011X
Electrical parameters	LevelSET S control unit: U_m = 30 V U_o = 14,5 V I_o = 78 mA P_o = 370 mW R = 244 Ω
Manufacturing year: Please see the serial number on the type plate	xxx x xxxxx xx YY x where YY = manufacturing year (e.g. 12 = 2012)

APPENDIX A. Factory Settings for SolarSET Oil Alarm

Factory settings of all SolarSET S Alarm Devices can be set with the following single command:

SOLARSET FACTORY SETTINGS

This will automatically set the parameters listed in the table below. If you want to change the operation of your SolarSET system, you can change any of the individual parameters.

Command and parameters	Explanation
DI 1: Sludge probe. 2: HiLevel probe. 3: Oil probe	Command sets probe names as follows: Probe nbr 1 (highest in LevelSET S front panel) is identified as “Sludge probe”. Probe nbr 2 (middle in LevelSET S front panel) is identified as “HiLevel probe”. Probe nbr 3 (lowest in LevelSET S front panel) is identified as “Oil probe”
ALTXT 1: Alarm on. Alarm off 2: Alarm on. Alarm off 3: Alarm on. Alarm off	Command sets alarm texts for all three probes as follows: “Alarm on” when the alarm activates. “Alarm off” when the alarm goes off.
VLIM 11.8	Alarm level (in Volts) for battery voltage.
MI 60	Measuring interval SolarSET S wakes up every 60 minutes for 20 seconds from low-power mode to check the status of probes.
LI 1	Listening interval SolarSET S will wake up from Normal (low-power) mode at 12:00 AM for 2 minutes to check if user has given new SMS commands. Interval is in days (factory setting is 1 day). Exact timing requires that CLOCK command has been given.

More information about the format of each command can be found from LevelSET S Operating and Installation Instructions.

Copyright © 2012 Labkotec Oy

All rights reserved

APPENDIX B. Connector Flange

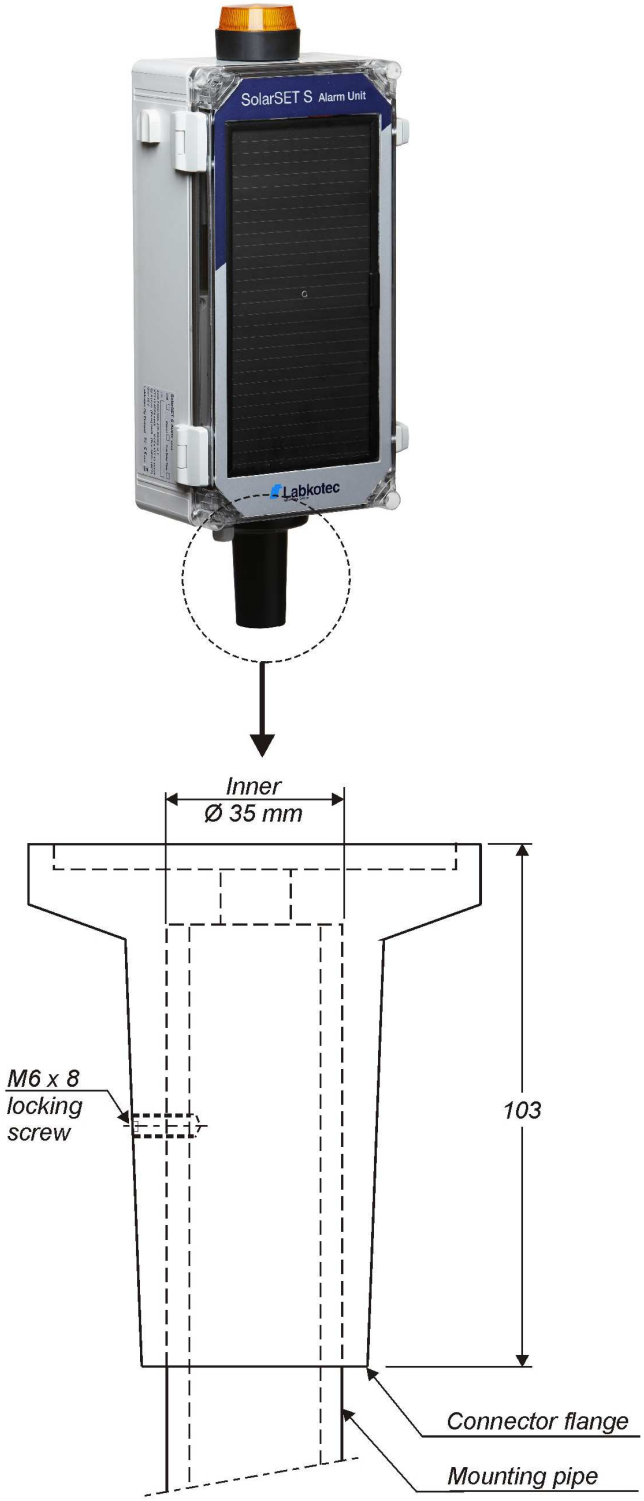

Drill a 5-6 mm hole through the mounting pipe to ensure the SolarSET is in its correct position.
Position the connector flange locking screw in line with the drilled hole, adjust the locking screw until flush with the outer surface of the connector flange.
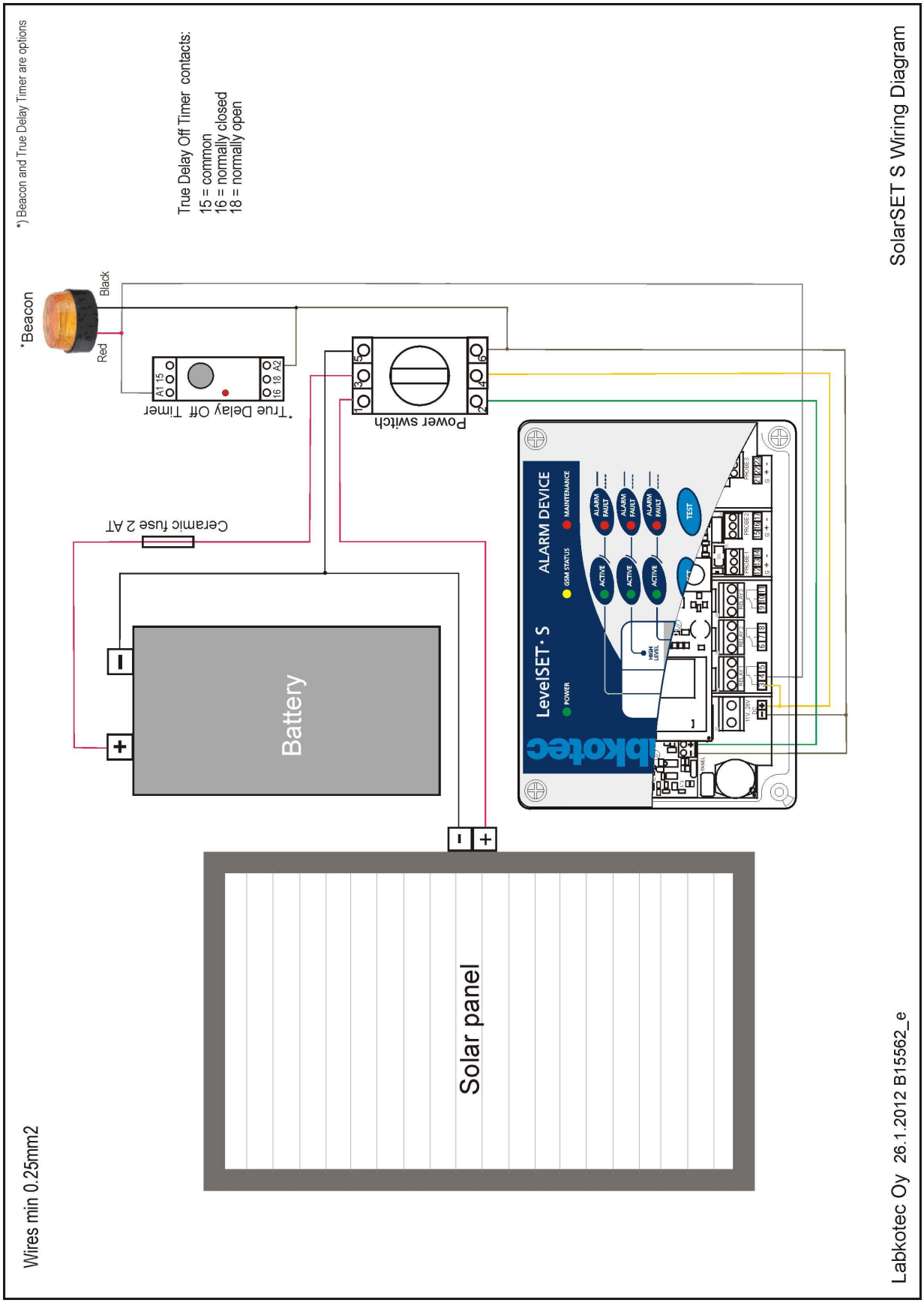
APPENDIX C. Wiring diagram