Fail-safe sensors

4

Fail-safe sensors – For all-round protection of persons and machines

For the protection of persons and machines in the industrial environment, maximum process reliability is paramount. Not simply to prevent adverse events but also to achieve the greatest possible plant availability for maximum efficiency. A clear case for our optical safety sensors. They ensure safe and reliable protection for persons, machines and systems. They are, of course, integrated into our uniform safety concept Safety Integrated.

Highlights

- Laser scanners, light barriers, light curtains and light grids for contact-free guarding of danger areas
- Safe all-round protection for persons and systems in stationary and mobile applications
- Wear-free and maintenance-free technology for maximum availability
- Freedom in machine design, without the need for mechanical safety gates
- Component of the complete Siemens Safety Integrated product range

Requirements for categories according to EN 954-1

Category[1)]	Summary of requirements	System response[2)]	Principles for achieving safety
B	The safety-relevant components of controls and/or their protective equipment and components must be designed, constructed, selected, assembled and combined in compliance with all applicable standards such as to be capable of withstanding all potentially hazardous influences.	The occurrence of a fault can result in loss of the safety function.	Mainly characterized by the selection of components
1	The requirements of Category B must be met. Well-proven components and well-proven safety principles must be implemented.	The occurrence of a fault can result in loss of the safety function but the probability of it occurring is less than for Category B.	
2	The requirements of Category B must be met and well-proven safety principles must be implemented. The safety functions must be tested at regular intervals by the machine control.	The occurrence of a fault can result in loss of the safety function between tests. The loss of safety functionality is detected in the course of testing.	Mainly characterized by the structure
3	The requirements of Category B must be met and well-proven safety principles must be implemented. Parts with relevance for safety must be implemented such that: • A single fault in any of these components does not result in loss of the safety function. • If it can be implemented in an appropriate way, individual faults/errors can be detected.	If the single fault/error occurs, the safety function always remains operational. • Some but not all faults are detected. • An accumulation of undetected faults may lead to loss of the safety function.	
4	The requirements of Category B must be met and well-proven safety principles must be implemented. Parts with relevance for safety must be implemented such that: • A single fault in any of these components does not result in loss of the safety function. • The individual fault is detected during or before the next activation of the safety function or, if this is not possible, an accumulation of faults will not result in loss of the safety function.	When faults occur, the safety function is always maintained. • Faults are detected early to prevent loss of the safety function.	

1) The categories are not intended to be applied in a specific sequence or hierarchy with reference to the safety requirements.

2) The risk assessment will establish whether complete or partial loss of the safety function(s) due to faults is acceptable.

SIMATIC FS100 switching strips

Finger-traps are a danger on many machines and other technical installations. In these situations, the simplest protection is implemented with rubber switching strips that on the one hand halt the dangerous motion in a fail-safe state and on the other hand act as a buffer to prevent injury.

The edge of the rubber strip (signal encoder) is monitored optically by means of a fail-safe send/receive sensor that is inserted into the strip from the outside. This means that any length can be used, cut to length as required by the customer.

SIMATIC FS200 light barriers

When space is at a premium, contact-free light barriers are the ideal solution for access protection to danger zones, danger points or entry points. Designed to the degree of protection IP65, they have a range of up to 150 m in Category 2.
The light barriers of Category 4 with a range of up to 60 m feature frequency modulated infrared light and integral pollution monitoring. Additional evaluation units support start/restart inhibiting, contactor control and muting functions.

SIMATIC FS400 light curtains and light grids

The contact-free, active optoelectronic light curtains and light grids for Category 2 and 4 according to EN 954-1 protect operating personnel at running machines or plants or in their vicinity. Thanks to specially developed integrated circuits (ASICs) and a patented, intelligent evaluation technique, they are extremely fault-tolerant and highly available. A wide range of different functions including start/restart inhibiting, contactor control, muting, cycle control and blanking support a wide range of different applications such as finger and hand protection, horizontal danger zone protection or access protection to large areas. Versions for connection to ASIsafe and PROFIsafe are available.

A light curtain or light grid comprises an emitter and a receiver, which must be mounted opposite each other. Depending on the resolution and the length, a certain number of transmit and receive diodes are arranged on top of each other. The infrared LEDs of the emitter emit short light pulses that are detected by the receive diodes.

SIMATIC FS600 laser scanner

The laser scanner is an optical distance sensor for flexible guarding of danger zones. By emitting harmless laser pulses and subsequently evaluating the reflections, the scanner detects persons and objects and responds in accordance to the programmed protected fields.

Switching strips Category 4

Overview

The safety strips for machine construction consist of sensitive edges and protect persons from being crushed or becoming stuck. If the safety strip is moved or if a fault occurs in the safety strip or the cable connections, the output circuits trip and the drive is halted.

The safety strips are approved with the corresponding evaluation unit for Category 4 to EN 954-1.

Application

Typical application examples in machine and plant construction are protective covers of machines, driverless transport systems, lifting tables, washing portals, lifting platforms and automatic handling devices.

Safety strips can also be used for limiting the force applied to an obstruction in door and gate areas as well as for automatically closing doors and windows in vehicle construction.

Design

The monitoring system consists of a 3RG78 55 safety strip and a 3RG78 57 evaluation unit.

The safety strip comprises the mounting strip (aluminum rail), the sensitive edge (rubber strip) and an infrared sensor. The sensor, consisting of a transmitter and receiver, has a sensing range of 0.5 to 10 m.

The evaluation unit is fitted in a narrow housing (width 22.5 mm) for mounting onto standard rails. A separate evaluation unit is required for each switch strip, i.e. the combination of transmitter and receiver.

A three-core cable connects the transmitter and receiver to the evaluation unit.

Installation

The mounting strip is cut to size and fitted to the edge to be protected.

The rubber strip is cut to size and inserted in the mounting strip. The transmitter and receiver are inserted into the hollow space of the rubber strip on the left and right.

The brown, green and white cores must be connected to the evaluation unit, ensuring the colors are connected correctly.

The infrared light beam between the transmitter and the receiver is routed along the rubber strip. It is reflected from the smooth inner surface of the strip. This allows the rubber strip to be curved to a certain extent without switch-off occurring.

Function

Due to the dynamic nature of the circuit, every fault is detected. In the event of a fault or when the strip is operated, the monitoring unit switches to the safe state. The restart must be acknowledged via an external circuit (e.g. by a Ready/On button).

The status of the unit is indicated via two LEDs (supply voltage, enable) on the front plate.

Outputs

The evaluation unit has:

- two positively opening relay outputs that are used as enabling circuits
- a semiconductor output (signaling output, with no relevance for safety) for reporting the fault to the controller (npn open collector).

Technical specifications

Processing unit

Type	3RG78 57
Approvals	Category 4 according to EN 954-1.
Overvoltage category according to DIN VDE 0110	3 (4 kV)
Operating voltage	24 V DC (+20%/-10%)
Intrinsic consumption	< 4 W
Supply voltage fuse protection	1 A (time-lag)
Output contacts	2 NO (safety-oriented) / 1 NC (HL, low-side switching)
Response time	approx. 32 ms
Continuous current	4 A
Switching current	max. 4 A
Operational voltage	max. 250 V AC, 50/60 Hz
Switching capacity (AC)	max. 1250 VA
Function indication	
• PM340	Green LED
• Channel	Green LED

Type	3RG78 57
Mechanical service life	30 mill. operating cycles
Degree of protection to IEC 60529	Terminal enclosure IP20
Ambient temperature	+5 … +55 °C
Enclosure fixing	Snap-on mounting on 35-mm mounting rail
Service position	As required

Patching strip (shaped rubber strip)

Type	3RG78 55
Material	EPDM, 60 Shore
Dimensions	W = 25 mm, H = 30 mm
Thermal stability	
• Temporary	–50 ... +120 °C
• Constant	–30 ... +100 °C
Resistance to chemicals	Ozone; oils conditionally, fuels, solvents, acids

Selection and Ordering data

	Version	Range m	Length m		Order No.
Optical safety switching strips					
 3RG78 55-1RG	**Emitter/receiver sensors** Receiver cable length 3 m, emitter cable length 10.5 m	0.5 ... 10		►	**3RG78 55-1RG**
 3RG78 55-.BB	**Sensor strip** (rubber profile)		1	►	**3RG78 55-2BB**
			2.5	►	**3RG78 55-2BD**
			5	►	**3RG78 55-2BF**
			10	►	**3RG78 55-2BG**
	Sensor strip, oil resistant (rubber profile)		1	►	**3RG78 55-4BB**
			2.5	►	**3RG78 55-4BD**
			5	►	**3RG78 55-4BF**
	Mounting strip (aluminum profile)		1	►	**3RG78 55-3BB**
			2.5	►	**3RG78 55-3BD**

	Application	Control	Available category to EN 954-1		Order No.
24 V DC processing unit					
	Monitoring safety switching strips	Dynamic signal	4	►	**3RG78 57-1BD**

► Preferred type, available from stock.

Dimensions

3RG78 55-1R emitter/receiver sensor

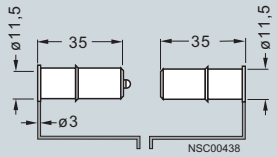

3RG78 55-2B sensor strip

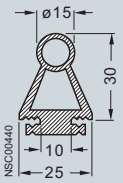

3RG78 55-3B mounting strip

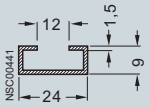

3RG78 57-1BD processing unit

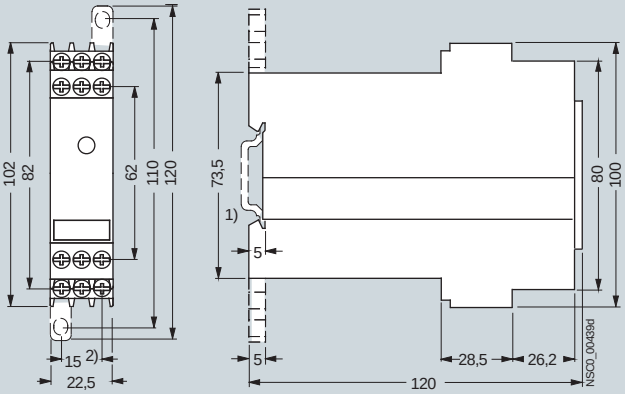

Light barriers Category 2 with evaluation unit, Light barriers Category 4

Overview

Light barriers are contact-free protective devices to guard access to danger zones, dangerous positions and entry points. They are the optimum solution in most cases, especially when safety has to be assured without adversely affecting productivity or causing a hindrance.

Each interruption of a light beam triggers a signal for reliable interruption of a dangerous movement of a machine, plant or other motorized installation.

A complete system comprises at least one one-way light barrier with a separate emitter and receiver. Two different systems are available that are approved by an employer's liability insurance association as a unit for Safety Category 2 or 4 in accordance with EN 954-1:

- Category 2 with separate evaluation unit
- Category 4, operation without an evaluation unit is possible.

The 3RG78 23 light barrier (Category 2) only operates in combination with the 3RG78 25 or 3RG78 47 evaluation unit as a contact-free protective device. The 3RG78 24 light barrier (Category 4) can also be operated in combination with 3RG78 47 evaluation units.

For further details on 3RG78 47, evaluation unit see page 4/82.

Application

Typical applications for light barriers include access protection for:

- Motorized windows, doors and gates
- Warehouse installations and devices
- Packaging machines
- Paletizing machines
- Stacking machines
- Winding and unwinding machines
- Textile machines
- Food processing machines
- Printing and paper processing machines
- Processing machines of the chemicals, plastics and rubber industry
- Rotary paternosters
- Lifting platforms
- Meat packing machines

and much more.

Technical specifications

Light barriers

Type	3RG78 23	3RG78 24
Categories according to EN 954-1	**Category 2**	**Category 4**
Operating voltage	24 V DC	24 V DC
Operating range	0 ... 120 m	0 ... 60 m
Typical range limit [1]	0 ... 150 m	–
Illuminant	Infrared (880 nm)	
Beam angle	max. 4°	max. 2°
Obstacle size (diameter)	min. 9 mm	min. 13 mm
Operating temperature	–25 ... +60 °C	
Degree of protection	IP65	
Connection	M12 circular connector	Pg gland

Evaluation units

Type	3RG78 25	–
Categories according to EN 954-1	**Category 2**	
Operating voltage	24 V DC, ± 15%	
Response time	max. 20 ms	
Current consumption	approx. 200 mA	
Safety output	2 floating NO contacts	
Load capability	max. 4 A	
Signaling outputs	Separate pnp transistor outputs	
Operating temperature	–20 ... +60 °C	
Degree of protection[2]	IP40	

[1] The range limit is the maximum achievable range without surplus light emission.

[2] Only suitable for use in electrical operating spaces, e.g. in control cabinet to deg

Selection and Ordering data

	Version	Connection		Order No.
Safety light barriers				
	Category 2 according to EN 954-1			
	Emitter	Circular connector M12	►	**3RG78 23-3BG00**
	Receiver, range 0 ... 150 m	Circular connector M12	►	**3RG78 23-3KB00**
	Category 4 according to EN 954-1			
	Emitter	Pg11 heavy-gauge threaded joint	►	**3RG78 24-6BG00**
	Receiver, range 0 ... 60 m	Pg11 heavy-gauge threaded joint	►	**3RG78 24-6JB00**
Evaluation unit				
	Category 2 according to EN 954-1			
	Evaluation unit, suitable for 3RG78 41 light curtains and 3RG78 23 light barriers	up to 6 pairs of light barriers can be connected	►	**3RG78 25-1CB1**
Accessories				
	M12 cable plug, 4-pole, with black PUR cable			
	Cable length 5 m		►	**3RX80 00-0CB42-1AF0**
	Cable length 10 m		►	**3RX80 00-0CB42-1AL0**

► Preferred type, available from stock.

Light barriers Category 2 with evaluation unit, Light barriers Category 4

Dimensions

3RG78 23 light barrier

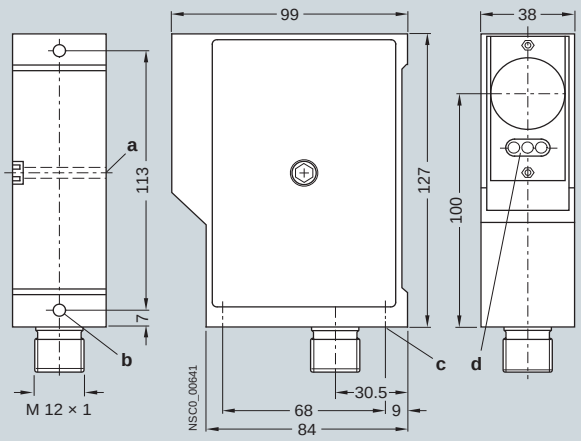

a = Device mounting M 6 × 12
b = Device mounting M 6 × 9
c = Device mounting M 6 × 9
d = LED

3RG78 24 light barrier

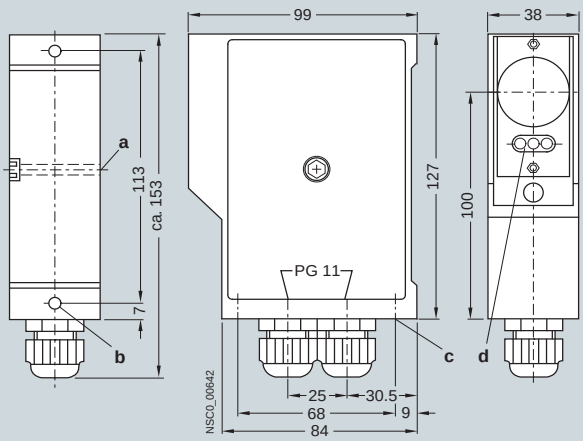

a = Device mounting M 6 × 12
b = Device mounting M 6 × 9
c = Device mounting M 6 × 12
d = LED

3RG78 25 evaluation unit

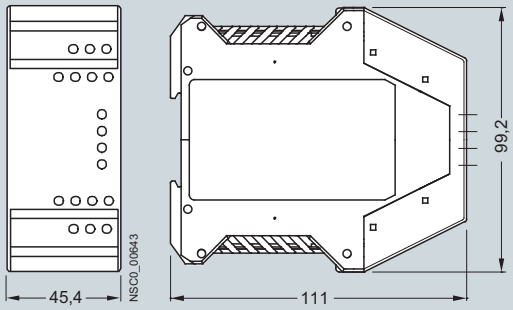

4

Overview

3RG78 4 and 3SF78 4 light curtains and light grids (for AS-Interface and PROFIBUS)

- are active optoelectronic protective devices (AOPD),
- comply with type 2 or 4 acc. to EN 61496-1, -2,
- comply with SIL 2 and 3 acc. to IEC/EN 61508,
- are EU prototype tested,
- protect the operating personnel at or near dangerous machines,
- operate contact-free,
- are free of wear in comparison with mechanical systems (e.g. safety mats).

For further details, please refer to the "Safety Integrated" manual and the operating instructions for the respective devices.

Tests/service

The devices are EU prototype tested (German Technical Inspectorate (TÜV) Product Service in cooperation with the German Statutory Industrial Accident Insurance Institution (BIA)).

Where necessary, tests can be performed before initial start-up as well as during the annual inspection (e.g. as per regulatory requirements for presses). Please contact your Siemens representative.

Benefits

Integrated functions:

- Start/restart inhibit
- Contactor control
- Blanking function package with
  - Fixed blanking
  - Floating blanking
  - Reduced resolution
- "Muting" function package
- Multi-scan function
- Cycle control

Configuration:

- By means of teach-in key using optomagnetic key
- Transmission of configuration data through a plug-in configuration card
- 2 transmission channels
- Cascading of host and guest devices
- Expanded display (2 × 7 segments)

Outputs/connections:

- Local interface
- M12 connection
- Hirschmann connection
- Brad Harrison connection (required primarily for applications in the NAFTA market (North American Free Trade Agreement)
- Transistor outputs
- Relay outputs
- Connection to AS-Interface
- Connection to PROFIBUS

Application

Light curtains for finger and hand protection in hazardous areas

Protection from entering hazardous areas by mounting light curtains near dangerous machine parts (finger and hand protection)

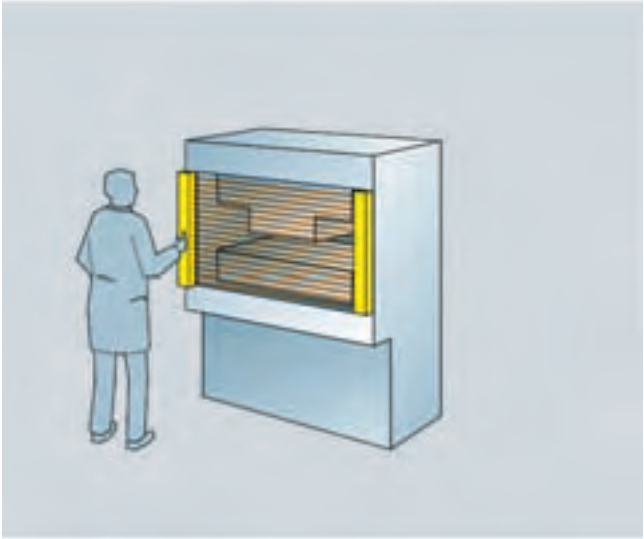

Introduction

Device selection

Light curtains for category 2 or 4, with 14, 20, 30 and 40 mm resolution

Application areas

E.g. presses, punches, filter presses, cutting machines

Light curtains to secure horizontal hazardous areas near the floor

Reliable detection of persons in hazardous areas by mounting the light curtain near the floor (not possible to crawl under)

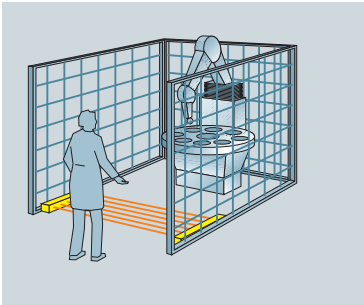

Device selection

Light curtains for category 2 or 4, with 50 and 55 mm resolution

Application areas

E.g. welding and assembly lines and robots in the automotive industry

Light curtains to secure horizontal hazardous areas

Reliable detection of persons in hazardous areas by mounting the light curtain at heights of 0.6 to 1 m

Device selection

Light curtains for category 2 or 4, with 80 and 90 mm resolution

Application areas

E.g. welding and assembly lines and robots in the automotive industry

Light grids for securing access points

Reliable detection of persons when they enter hazardous areas

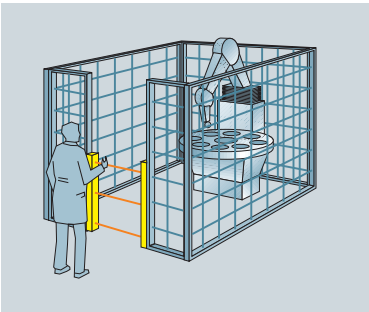

Device selection

2-beam, 3-beam or 4-beam light grids for category 4, with 18 m range

Application areas

Securing access points, e.g. to robots or handling machines.

Light grids to protect access to large areas

Reliable detection of persons when they enter hazardous areas

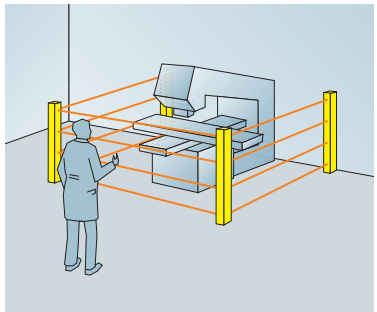

Securing larger hazardous areas with high ranges of 60 m and 70 m.

Device selection

2-beam, 3-beam or 4-beam light grids for category 4, with 60 m and 70 m ranges.

Application areas

Securing access points, e.g. to automatic processing centers or palleting machines.

Safety categories

Depending on the safety category requirement to EN 954-1 that results from the C standard and/or the machine or system risk analysis, light curtains or grids up to type 2 or 4 can be used (definition of safety categories: see page 4/2).

Design

A light curtain or light grid comprises an emitter and a receiver, which must be mounted opposite each other. Depending on the resolution and the length, a certain number of transmit and receive diodes are arranged on top of each other. The infrared LEDs of the emitter emit short light pulses that are detected by the receive diodes.

Cascading of host and guest devices for greater protection field heights or lengths or for an angular arrangement (as an option).

- 3RG78 44 and 3SF78 44 light curtains and grids with integrated evaluation for Type 4 according to IEC/EN 61496 or SIL 3 to IEC 61508
  - Resolution 14, 30, 50 and 90 mm
  - Protection field height: 150 mm to 3000 mm
  - 2-beam, 3-beam or 4-beam light grids
  - Transceiver, 2-beam with deflection mirror
  - Cascading of host and guest devices for greater protection field heights or lengths or for an angular arrangement (as an option).
- 3RG78 45 light curtains and grids with integrated evaluation for Type 4 to IEC/EN 61496
  - Resolution 14, 30, 50 and 90 mm
  - Protection field height: 150 mm to 3000 mm
  - Transceiver, 2-beam with reflective mirror
  - 2, 3, or 4-beam light grids
  - Cascading of host and guest devices for greater protection field heights or lengths or for an angular arrangement (as an option).
- 3RG78 41 light curtains for external evaluation for Type 2 to IEC/EN 61496
  - Resolution: 30, 55, and 80 mm
  - Protection field height: 150 mm to 1800 mm
  - Cascading of host and guest devices for greater protection field heights or lengths or for an angular arrangement (as an option).

- 3RG78 43 light curtains with integrated evaluation for Type 2 according to IEC/EN 61496, developed according to EN 61508 (SIL 2), suited for risk assessment according to pr EN ISO 13849-1
  - Resolution 20, 30, 40 and 90 mm
  - Protection field heights from 150 mm to 1800 mm
- 3RG78 46 light curtains with integrated evaluation for Type 4 to IEC/EN 61496
  - Resolution 14, 20, 30, 40 and 90 mm
  - Protection field heights from 150 mm to 1800 mm
- 3RG78 42 light curtains and grids with external evaluation for Type 4 to IEC/EN 61496
  - Resolution 14, 30, 50 and 90 mm
  - Protection field heights from 150 mm to 3000 mm
  - Transceiver, 2-beam with reflective mirror
  - 2-beam, 3-beam or 4-beam light grids
  - Connection to actuator sensor interface
  - Cascading of host and guest devices for greater protection field heights or lengths or for an angular arrangement (as an option).

Standards

- IEC/EN 61496-1, -2 (requirements for non-contact protection systems)
- EN 999 (including calculation of safety clearances)
- EN 954-1 (machine safety, safety-related parts of control systems)
- EN 61508 (functional safety of electrical/electronic/programmable electronic safety-related systems)

Function

Blanking function package

The light curtains can also be supplied with an optional blanking function.

Fixed blanking

If an object is permanently located in the light path, the corresponding zone can be suppressed. This is achieved by suppressing the required number of beams.

The suppressed objects must be permanently located in the protective zone, otherwise safety cannot be guaranteed. The light curtain switches the equipment off.

Configuration is carried out using a teach-in function by means of the safety key or using the programming and diagnostics software SafetyLab.

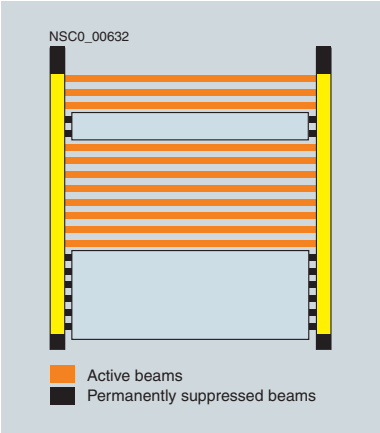

Floating blanking

If moving objects are located in the light path, any number of beams can be suppressed. The objects can move within the suppressed beams without the light curtain switching off.

If the moving objects are removed from the zone, the light curtain will interrupt the hazardous movement, otherwise safety can no longer be guaranteed.

Configuration is carried out using a teach-in function by means of the safety key or using the programming and diagnostics software SafetyLab.

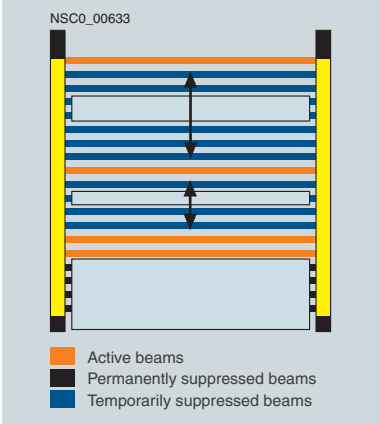

Reduced resolution

If an object is located in the light path, two or three beams can be suppressed. The difference between reduced resolution and floating blanking is that continuous monitoring does not take place.

A DIP switch is used for configuration or the programming and diagnostics software SafetyLab.

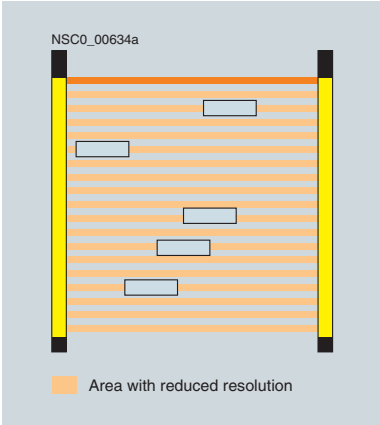

"Muting" function package

When arranged vertically, light curtains, light grids, and transceivers are often used for protecting access points. With additional sensor signals, the protective function can be suppressed to allow material to be transported in or out of hazardous areas, for example. The protection field is temporarily suppressed and, once the goods have passed through, reactivated. Personnel must not be allowed to enter the hazardous area while muting is active.

Using the number of connected sensors or the sequence of the muting signals, the devices automatically recognize the "sequential muting" mode when inputs M1 to M4 are assigned and "2-sensor parallel muting" when the signals M2 and M3 are assigned. A DIP switch can be used to set "4-sensor parallel muting".

Introduction

Muting restart

If the power fails while goods are passing the muting sensors, for example, the valid muting sequence is interrupted. When the power supply has been restored, muting is not automatically resumed because the muting sequence is not as expected.

To remove the goods from the area covered by the muting sensors, an integrated retraction mode can be activated using the start key. The light curtain attempts to find a valid muting sequence from the muting sensors. If successful, the muting indicator lamp stops flashing and is lit continuously. If unsuccessful, the start key must be kept depressed until the muting path is completely free.

4-sensor sequential muting

If the material that is to be transported in the danger zone always has the same dimensions and there is no lack of space, the use of sequential muting is preferred. With sequential muting, four muting sensors are connected. These must be activated in a predefined sequence to trigger muting. They can be activated in either of the following sequences: M1, M2, M3, M4 or M4, M3, M2, M1. The transported goods must be of sufficient length to briefly activate all 4 sensors simultaneously. Sequential muting is successfully completed when the third muting sensor to be activated is not activated any longer.

The SafetyLab software can be used to select a muting variant in which the second muting sequence is triggered before the first has finished (sequential muting with two objects). This variant saves time and, in turn, production costs for the user.

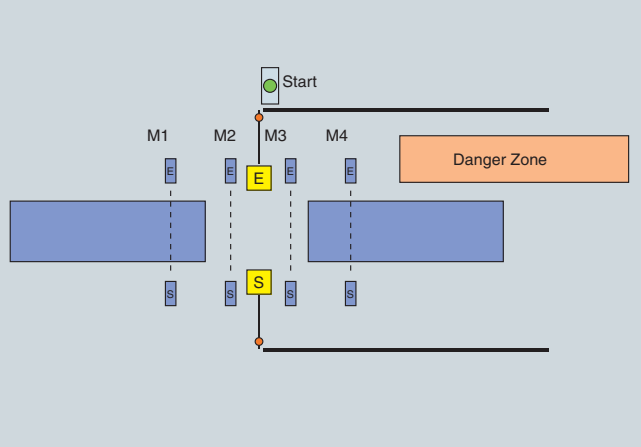

2-sensor parallel muting

Parallel muting is ideal in plants in which the dimensions of the goods are not constant or space requirements must be kept to a minimum. Two muting sensors can be used, whose beams intersect behind the protection field in the danger zone.

Parallel muting is used when signals M2 and M3 are switched simultaneously without M1 and M4 having been activated or connected beforehand or simultaneously. Two-sensor parallel muting is straightforward because only two muting sensors are required. Goods can also be moved forward and backward within the muting area.

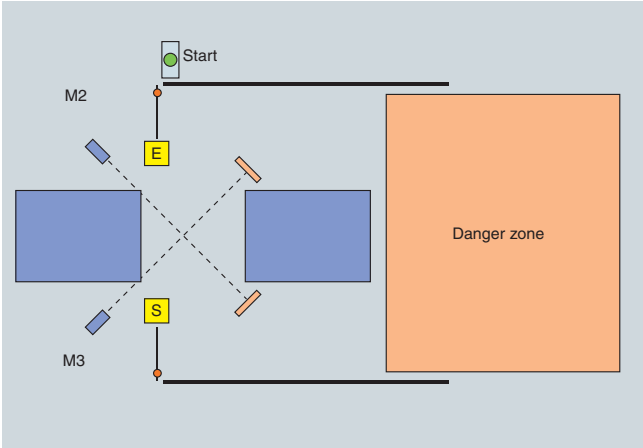

3-sensor direction muting

Three-sensor direction muting is configured in a similar way to 2-sensor parallel muting. Material can only be transported through the light curtain in one direction. To trigger the muting function, muting sensor M1 must first be activated, followed by muting sensors M2 and M3. If the paths for muting sensors M2 and M3 are interrupted, sensor M1 does not need to be activated.

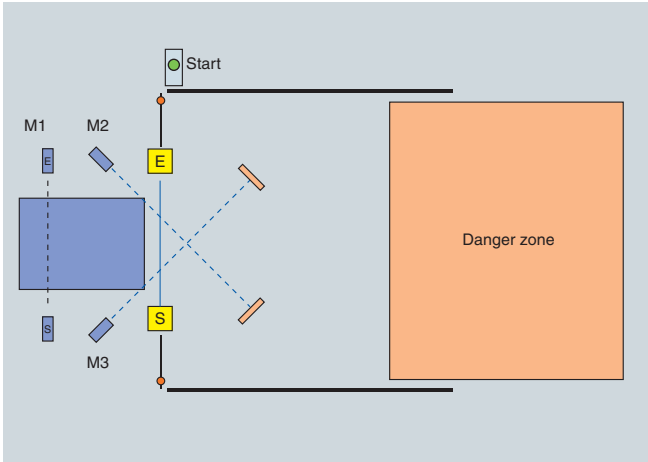

Parallel muting with 4 sensors

4-sensor parallel muting can be used advantageously wherever

- the transported material is too small to be acquired simultaneously by 4 sensors arranged sequentially,
- the available space is too small even for the crossover light beams of 2-sensor parallel muting.

The function of 4-sensor parallel muting corresponds to that of 2-sensor parallel muting with the additional characteristic of the muting activation signal being obtained from two sensor pairs. Muting is triggered when within a 2.5 s interval, M2 is activated with M3 or M1 is activated with M4.

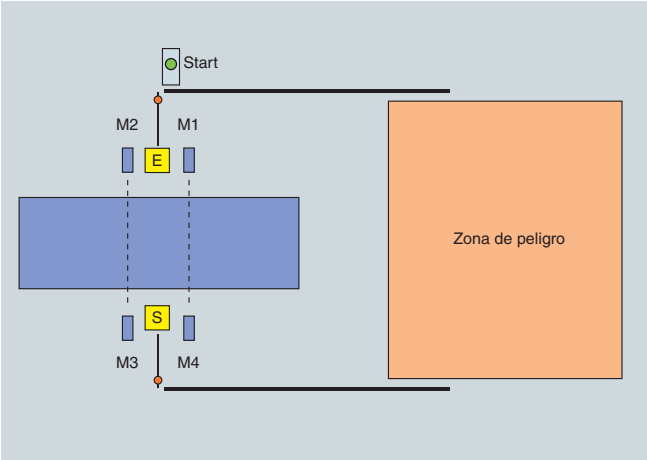

Transceiver

The transceiver comprises a transmitter and receiver in a single unit. The infrared light of the transmit diode is reflected twice through 90° so that it returns to the receive diode of the transceiver. This creates a twin-beam light barrier that is more cost effective than conventional light barriers with separate transmitters and receivers. 3RG78 45 series transceivers have integrated contactor control and startup/restart inhibit. 3RG78 44 and 3SF78 44 series transceivers have additional integrated muting functions. These devices include five 5-pole M12 sockets on the front panel, to which the muting sensors can be directly connected.

Cascading of devices: Host/guest combinations

Cascading of devices refers to lengthening the optical axis and therefore the protection field height, whereby protection on the horizontal and vertical levels can be realized at the same time using a flexible connecting cable between the host and guest device. The safety outputs and the processor tasks are located in the host device so that the guest devices can be connected regardless of the function package or outputs.

The standard cable that can be used to connect the host to the guest is already installed on the guest device. The host comes with the appropriate M12 socket on its underside. Host devices can only be operated together with a guest device.

The guest devices are from the 3RG78 42 series, but they are also suitable for the 3SF78 42, 3RG78 44, 3SF78 44 and 3RG78 45 series. The guest device resolution can be combined with any other resolution (e.g. the host device can have a 14 mm resolution while a 30 or 50 mm resolution is sufficient for the guest device.

PC software

PC software can be used to visualize and record the function of the light curtains.

SafetyLab is the diagnostic and parameterization software for 3RG78 44 / 3SF78 44 light curtains, light grids and transceivers. SafetyLab can be used for all available light curtain and light grid function packages as of firmware Version 3.10:

- Blanking function package
- Muting function package
- Sequence control function package

The firmware version of the receiver is indicated on the 7-segment display during start-up.

Mounting sets

To facilitate installation, alignment, commissioning and troubleshooting, a practical accessories package containing mounting columns, reflecting mirror columns, reflecting mirrors, mounting supports and laser alignment tools is available.

Program overview

Overview

Unit type	Evaluation	Category type	Function package	Output	Connection type	LEDs	Page
3RG78 44 series							
Light curtains	Internal	4	Blanking	Transistor	M12 plug connector	-	4/18
Light curtains	Internal	4	Blanking	Transistor	Cable gland	-	4/19
Light curtains	Internal	4	Blanking	Transistor	Brad Harrison (MIN)	-	4/21
Light curtains	Internal	4	Blanking	Transistor	Hirschmann	-	4/23
Light curtains	Internal	4	Blanking	Relay	Hirschmann	-	4/25
Light curtains	Internal	4	Muting	Transistor	M12 plug connector	-	4/26
Light curtains	Internal	4	Muting	Transistor	Cable gland	-	4/26
Light grids	Internal	4	Muting	Transistor	Cable gland	-	4/27
Transceivers	Internal	4	Muting	Transistor	Cable gland	with and without	4/27
Light curtains	Internal	4	Muting	Transistor	Brad Harrison (MIN)	-	4/27
Light grids	Internal	4	Muting	Transistor	Brad Harrison (MIN)	-	4/28
Light grids	Internal	4	Muting	Transistor	Hirschmann	-	4/28
Light curtains	Internal	4	Muting	Relay	Hirschmann	-	4/28
Light curtains	Internal	4	Muting	Relay	Hirschmann	with	4/29
Light grids	Internal	4	Muting	Transistor	M12 plug connector	-	4/29
Light grids	Internal	4	Muting	Relay	Hirschmann	-	4/30
Light grids	Internal	4	Muting	Relay	Hirschmann	with	4/30
Transceivers	Internal	4	Muting	Transistor	M12 plug connector	with and without	4/31
Transceivers	Internal	4	Muting	Relay	Hirschmann	with and without	4/31
Light curtains	Internal	4	Sequence control system	Transistor	M12 plug connector	-	4/32
Light curtains	Internal	4	Sequence control system	Relay	Hirschmann	-	4/32
3RG78 45 series							
Light curtains	Internal	4	Standard	Transistor	M12 plug connector	-	4/36
Light grids	Internal	4	Standard	Transistor	M12 plug connector	-	4/39
Transceivers	Internal	4	Standard	Transistor	M12 plug connector	-	4/39
Light curtains	Internal	4	Standard	Transistor	Hirschmann	-	4/39
Light grids	Internal	4	Standard	Transistor	Hirschmann	-	4/41
Transceivers	Internal	4	Standard	Transistor	Hirschmann	-	4/41
Light curtains	Internal	4	Standard	Transistor	Brad Harrison (MIN)	-	4/41
Light grids	Internal	4	Standard	Transistor	Brad Harrison (MIN)	-	4/44
Transceivers	Internal	4	Standard	Transistor	Brad Harrison (MIN)	-	4/44
Light curtains	Internal	4	Standard	Transistor	Cable gland	-	4/45
Light grids	Internal	4	Standard	Transistor	Cable gland	-	4/47
Transceivers	Internal	4	Standard	Transistor	Cable gland	-	4/47
3SF78 44 ASIsafe series							
Light curtains	Internal	4	Blanking	ASIsafe	ASIsafe	-	4/52
Light curtains	Internal	4	Muting	ASIsafe	ASIsafe	-	4/53
Light curtains	Internal	4	Muting	ASIsafe	ASIsafe	with	4/53
Light grids	Internal	4	Muting	ASIsafe	ASIsafe	-	4/54
Light grids	Internal	4	Muting	ASIsafe	ASIsafe	with	4/54
Transceivers	Internal	4	Muting	ASIsafe	ASIsafe	with and without	4/54
Light curtains	Internal	4	Sequence control system	ASIsafe	ASIsafe	-	4/55

Unit type	Evaluation	Category type	Function package	Output	Connection type	LEDs	Page
3SF78 44 PROFIsafe series							
Light curtains	Internal	4	Blanking	PROFIsafe	PROFIsafe	-	4/60
Light curtains	Internal	4	Muting	PROFIsafe	PROFIsafe	-	4/60
Light grids	Internal	4	Muting	PROFIsafe	PROFIsafe	-	4/62
Transceivers	Internal	4	Muting	PROFIsafe	PROFIsafe	with and without	4/62
Light curtains	Internal	4	Sequence control system	PROFIsafe	PROFIsafe	-	4/62
3SF78 42 ASIsafe series							
Light curtains	external	4	-	ASIsafe	ASIsafe	-	4/64
Light grids	external	4	-	ASIsafe	ASIsafe	-	4/67
Transceivers	external	4	-	ASIsafe	ASIsafe	-	4/67
3SF78 46 FS420I series							
Light curtains	Internal	4	Standard	Transistor	M12 plug connector	-	4/72
3RG78 43 FS420I series							
Light curtains	Internal	2 (SIL 2)	Standard	Transistor	M12 plug connector	-	4/76
3RG78 41 series							
Light curtains	external	2	-	Transistor	M12 plug connector	-	4/80

SIMATIC FS400 light curtains and light grids

3RG78 44 series, type 4

Integrated evaluation

Overview

3RG78 44 light curtains and grids with integrated evaluation for type 4 in accordance with IEC/EN 61496

- with function packages "Blanking", "Muting" and "Cycle Control",
- Resolutions: 14, 30, and 50 mm
- Protection field height: 150 mm to 3000 mm
- 2-beam, 3-beam or 4-beam light grids
- Cascading of host and guest devices for greater protection field heights or lengths or for an angular arrangement (as an option).

Two standard 3RG78 48-0AB mounting brackets each are enclosed with all devices (can also be ordered as accessories, see page 4/92).

Technical specifications

Type	3RG78 44
Safety category	
• to EN, IEC 61496-1, -2	Type 4
• according to IEC 61508	SIL 3
Protection field height	
• for 14 and 30 mm resolution	150 ... 1800 mm
• for 50 mm resolution	450 ... 3000 mm
Protection field width, range	
• for 14 mm resolution	0.3 ... 6 m
• for 30 and 50 mm resolution	0.8 ... 18 m
Detection capability (resolution)	14 mm, 30 mm, 50 mm
Supply voltage (emitter and receiver)	24 V DC ± 20% (external power pack with safe isolation and compensation of 20 ms voltage dip is necessary)
Residual ripple	< 5%
Current consumption	
• Emitter	75 mA
• Receiver	180 mA (without external load)
General value for external fuse in the transmitter and receiver supply leads	4 A
Wave length	880 nm (infrared)
Synchronization	Optically between emitter and receiver
Vibration resistance	5 *g*, 10 … 55 Hz to IEC/EN 60068-2-6
Shock resistance	10 *g*, 16 ms to IEC/EN 60068-2-29
Ambient temperature	
• Operation	0 ... +50 °C
• Storage	–25 ... +70 °C
Relative humidity	15 ... 95%
Degree of protection	IP65
Safety class to DIN VDE 0106	III

Application of the EN ISO 13849-1 standard: 2006 "Safety of machinery" for 3RG78 44 light curtains and light grids

	Protection field height/number of beams	PL 13849-1	Category ISO 13849-1	Cat. 954-1	PFH_D	B10d DC 13 (ind. L)	B10d AC 15 (ind. L)	$T_{M/years}$
3RG78 44-... light grids	4-beam	e	4	4	1.90×10^{-8}			20
3RG78 44-... light curtain	900 mm	e	4	4	2.26×10^{-8}			20
3RG78 44-... light curtain	1800 mm	e	4	4	2.67×10^{-8}			20
3RG78 44-8….-…. also for light curtains and light grids with relay output						630000 (5 A, 24 V)	1480000 (3 A, 230 V)	

Explanation

PFH_D = Probability of dangerous failure per hour

PL = Performance level
Discrete level used to specify the ability of safety-related parts of control systems to perform a safety function under foreseeable conditions: from PL "a" (highest probability of failure) to PL "e" (lowest probability of failure).

B10
The B10 value for components subject to wear is expressed in number of switching cycles: it is the number of switching cycles after which 10% of the test specimens fail in the course of an endurance test. With the B10 value and the operating cycle, the failure rate of electromechanical components can be calculated:

For further explanations, see the brochure "European machinery directive - implemented easily", Order No. E20001-A230-M103-V1-7600.

3RG78 44 program overview

Unit type	Function package	Output	Connection type	For light curtains: Resolution For light grids and transceivers: Range			LEDs	See page
				14 mm	30 mm	50 mm		
Light curtains	Blanking	Transistor	M12 plug connector	✔	✔	-	-	4/18
Light curtains	Blanking	Transistor	Cable gland	✔	✔	✔	-	4/19
Light curtains	Blanking	Transistor	Brad Harrison (MIN)[1]	✔	✔	✔	-	4/21
Light curtains	Blanking	Transistor	Hirschmann	✔	✔	✔	-	4/23
Light curtains	Blanking	Relay	Hirschmann	✔	✔	-	-	4/25
Light curtains	Muting	Transistor	M12 plug connector	-	✔	-	-	4/26
Light curtains	Muting	Transistor	Cable gland	-	✔	-	-	4/26
Light grids	Muting	Transistor	Cable gland	0.8 … 18 m; 6 … 70 m			-	4/27
Transceivers	Muting	Transistor	Cable gland	6.5 m			with and without	4/27
Light curtains	Muting	Transistor	Brad Harrison (MIN)[1]	-	✔	-	-	4/27
Light grids	Muting	Transistor	Brad Harrison (MIN)[1]	0.8 … 18 m			-	4/28
Light grids	Muting	Transistor	Hirschmann	6 ... 70 m			-	4/28
Light curtains	Muting	Relay	Hirschmann	-	✔	-	-	4/28
Light curtains	Muting	Relay	Hirschmann	-	✔	-	with	4/29
Light grids	Muting	Transistor	M12 plug connector	0.8 … 18 m			-	4/29
Light grids	Muting	Relay	Hirschmann	0.8 … 18 m; 6 … 70 m			-	4/30
Light grids	Muting	Relay	Hirschmann	0.8 … 18 m			with	4/30
Transceivers	Muting	Transistor	M12 plug connector	6.5 m			with and without	4/31
Transceivers	Muting	Relay	Hirschmann	6.5 m			with and without	4/31
Light curtains	Sequence control system	Transistor	M12 plug connector	✔	-	-	-	4/32
Light curtains	Sequence control system	Relay	Hirschmann	✔	✔	-	-	4/32

Accessories

Electrical connection	
• Hirschmann type cables and cable plugs	4/94
• Brad Harrison type cable (MIN series)	4/94
• Connecting cable with M12 connection	4/95
Accessory cable	
• for the local connection to connect muting lights, key-operated switches, reset buttons, etc.	4/94
Assembly materials	
• Fixing columns, reflecting mirror	4/91
• Muting mounting systems	4/92
• Muting accessories	4/95
Laser alignment aids, diagnostic software	4/93

1) Required primarily for applications in the NAFTA market

Ordering notes

Included in the scope of supply:

3RG78 44 light curtains with blanking, muting or sequence control system function package	
Emitter	3RG78 48-0AB mounting bracket set and emitter insert
Receiver	3RG78 48-0AB mounting bracket set, operating instructions/data sheets and safety key
• in addition with 14 mm resolution	3RG78 48-0FH test rod (14/24/33 and 19/29 mm)
• in addition with 30 mm resolution	3RG78 48-0AH/BH test rod (14/30 and 38 mm)
Guest devices of the 3RG78 42 series	
Emitter	3RG78 48-0AB mounting bracket set
Receiver	3RG78 48-0AB mounting bracket set
• in addition with 14/30 mm resolution	3RG78 48-0AH test rod
3RG78 44 light grids with muting function package	
Emitter	3RG78 48-0AB mounting bracket set and emitter insert
Receiver	3RG78 48-0AB mounting bracket set, operating instructions/data sheets
3RG78 44 transceivers with muting function package	
Transceiver	3RG78 48-0AB mounting bracket set, operating instructions/data sheets

Selection and Ordering data

4

Light curtains with blanking function package
Transistor output with M12 plug connection [1)]

Protection field height	Type	Standard device	Host device	Guest device
mm		Order No.	Order No.	Order No.
Resolution 14 mm				
300	Receiver	**3RG78 44-3BB04-0SS1**	**3RG78 44-3BB04-1SS1**	**3RG78 42-6BD21**
300	Emitter	**3RG78 44-3SB04-0SS0**	**3RG78 44-3SB04-1SS0**	**3RG78 42-6BD20**
450	Receiver	**3RG78 44-3BB06-0SS1**	**3RG78 44-3BB06-1SS1**	**3RG78 42-6BE21**
450	Emitter	**3RG78 44-3SB06-0SS0**	**3RG78 44-3SB06-1SS0**	**3RG78 42-6BE20**
600	Receiver	**3RG78 44-3BB08-0SS1**	**3RG78 44-3BB08-1SS1**	**3RG78 42-6BF21**
600	Emitter	**3RG78 44-3SB08-0SS0**	**3RG78 44-3SB08-1SS0**	**3RG78 42-6BF20**
750	Receiver	**3RG78 44-3BB11-0SS1**	**3RG78 44-3BB11-1SS1**	**3RG78 42-6BG21**
750	Emitter	**3RG78 44-3SB11-0SS0**	**3RG78 44-3SB11-1SS0**	**3RG78 42-6BG20**
900	Receiver	**3RG78 44-3BB13-0SS1**	**3RG78 44-3BB13-1SS1**	**3RG78 42-6BH21**
900	Emitter	**3RG78 44-3SB13-0SS0**	**3RG78 44-3SB13-1SS0**	**3RG78 42-6BH20**
1050	Receiver	**3RG78 44-3BB15-0SS1**	**3RG78 44-3BB15-1SS1**	**3RG78 42-6BJ21**
1050	Emitter	**3RG78 44-3SB15-0SS0**	**3RG78 44-3SB15-1SS0**	**3RG78 42-6BJ20**
1200	Receiver	**3RG78 44-3BB17-0SS1**	**3RG78 44-3BB17-1SS1**	**3RG78 42-6BK21**
1200	Emitter	**3RG78 44-3SB17-0SS0**	**3RG78 44-3SB17-1SS0**	**3RG78 42-6BK20**
1350	Receiver	**3RG78 44-3BB20-0SS1**	**3RG78 44-3BB20-1SS1**	**3RG78 42-6BL21**
1350	Emitter	**3RG78 44-3SB20-0SS0**	**3RG78 44-3SB20-1SS0**	**3RG78 42-6BL20**
1500	Receiver	**3RG78 44-3BB22-0SS1**	**3RG78 44-3BB22-1SS1**	**3RG78 42-6BM21**
1500	Emitter	**3RG78 44-3SB22-0SS0**	**3RG78 44-3SB22-1SS0**	**3RG78 42-6BM20**
1650	Receiver	**3RG78 44-3BB24-0SS1**	**3RG78 44-3BB24-1SS1**	**3RG78 42-6BN21**
1650	Emitter	**3RG78 44-3SB24-0SS0**	**3RG78 44-3SB24-1SS0**	**3RG78 42-6BN20**
1800	Receiver	**3RG78 44-3BB26-0SS1**	**3RG78 44-3BB26-1SS1**	**3RG78 42-6BP21**
1800	Emitter	**3RG78 44-3SB26-0SS0**	**3RG78 44-3SB26-1SS0**	**3RG78 42-6BP20**

1) For scope of supply see top of page 4/18

Protection field height	Type	Standard device	Host device		Guest device
mm		Order No.	Order No.		Order No.
Resolution 30 mm					
300	Receiver	**3RG78 44-3BD04-0SS1**	**3RG78 44-3BD04-1SS1**		**3RG78 42-6DD21**
300	Emitter	**3RG78 44-3SD04-0SS0**	**3RG78 44-3SD04-1SS0**		**3RG78 42-6DD20**
450	Receiver	**3RG78 44-3BD06-0SS1**	**3RG78 44-3BD06-1SS1**	►	**3RG78 42-6DE21**
450	Emitter	**3RG78 44-3SD06-0SS0**	**3RG78 44-3SD06-1SS0**	►	**3RG78 42-6DE20**
600	Receiver	**3RG78 44-3BD08-0SS1**	**3RG78 44-3BD08-1SS1**		**3RG78 42-6DF21**
600	Emitter	**3RG78 44-3SD08-0SS0**	**3RG78 44-3SD08-1SS0**		**3RG78 42-6DF20**
750	Receiver	**3RG78 44-3BD11-0SS1**	**3RG78 44-3BD11-1SS1**		**3RG78 42-6DG21**
750	Emitter	**3RG78 44-3SD11-0SS0**	**3RG78 44-3SD11-1SS0**		**3RG78 42-6DG20**
900	Receiver	**3RG78 44-3BD13-0SS1**	**3RG78 44-3BD13-1SS1**		**3RG78 42-6DH21**
900	Emitter	**3RG78 44-3SD13-0SS0**	**3RG78 44-3SD13-1SS0**		**3RG78 42-6DH20**
1050	Receiver	**3RG78 44-3BD15-0SS1**	**3RG78 44-3BD15-1SS1**		**3RG78 42-6DJ21**
1050	Emitter	**3RG78 44-3SD15-0SS0**	**3RG78 44-3SD15-1SS0**		**3RG78 42-6DJ20**
1200	Receiver	**3RG78 44-3BD17-0SS1**	**3RG78 44-3BD17-1SS1**		**3RG78 42-6DK21**
1200	Emitter	**3RG78 44-3SD17-0SS0**	**3RG78 44-3SD17-1SS0**		**3RG78 42-6DK20**
1350	Receiver	**3RG78 44-3BD20-0SS1**	**3RG78 44-3BD20-1SS1**		**3RG78 42-6DL21**
1350	Emitter	**3RG78 44-3SD20-0SS0**	**3RG78 44-3SD20-1SS0**		**3RG78 42-6DL20**
1500	Receiver	**3RG78 44-3BD22-0SS1**	**3RG78 44-3BD22-1SS1**		**3RG78 42-6DM21**
1500	Emitter	**3RG78 44-3SD22-0SS0**	**3RG78 44-3SD22-1SS0**		**3RG78 42-6DM20**
1650	Receiver	**3RG78 44-3BD24-0SS1**	**3RG78 44-3BD24-1SS1**		**3RG78 42-6DN21**
1650	Emitter	**3RG78 44-3SD24-0SS0**	**3RG78 44-3SD24-1SS0**		**3RG78 42-6DN20**
1800	Receiver	**3RG78 44-3BD26-0SS1**	**3RG78 44-3BD26-1SS1**		**3RG78 42-6DP21**
1800	Emitter	**3RG78 44-3SD26-0SS0**	**3RG78 44-3SD26-1SS0**		**3RG78 42-6DP20**

Light curtains with blanking function package
Transistor output with cable gland[1)]

Protection field height	Type	Standard device	Host device		Guest device
mm		Order No.	Order No.		Order No.
Resolution 14 mm					
150	Receiver	**3RG78 44-6BB02-0SS1**	**–**		**3RG78 42-6BB21**
150	Emitter	**3RG78 44-6SB02-0SS0**	**–**		**3RG78 42-6BB20**
225	Receiver	**3RG78 44-6BB03-0SS1**	**3RG78 44-6BB03-1SS1**		**3RG78 42-6BC21**
225	Emitter	**3RG78 44-6SB03-0SS0**	**3RG78 44-6SB03-1SS0**		**3RG78 42-6BC20**
300	Receiver	**3RG78 44-6BB04-0SS1**	**3RG78 44-6BB04-1SS1**		**3RG78 42-6BD21**
300	Emitter	**3RG78 44-6SB04-0SS0**	**3RG78 44-6SB04-1SS0**		**3RG78 42-6BD20**
450	Receiver	**3RG78 44-6BB06-0SS1**	**3RG78 44-6BB06-1SS1**		**3RG78 42-6BE21**
450	Emitter	**3RG78 44-6SB06-0SS0**	**3RG78 44-6SB06-1SS0**		**3RG78 42-6BE20**
600	Receiver	**3RG78 44-6BB08-0SS1**	**3RG78 44-6BB08-1SS1**		**3RG78 42-6BF21**
600	Emitter	**3RG78 44-6SB08-0SS0**	**3RG78 44-6SB08-1SS0**		**3RG78 42-6BF20**
750	Receiver	**3RG78 44-6BB11-0SS1**	**3RG78 44-6BB11-1SS1**		**3RG78 42-6BG21**
750	Emitter	**3RG78 44-6SB11-0SS0**	**3RG78 44-6SB11-1SS0**		**3RG78 42-6BG20**
900	Receiver	**3RG78 44-6BB13-0SS1**	**3RG78 44-6BB13-1SS1**		**3RG78 42-6BH21**
900	Emitter	**3RG78 44-6SB13-0SS0**	**3RG78 44-6SB13-1SS0**		**3RG78 42-6BH20**
1050	Receiver	**3RG78 44-6BB15-0SS1**	**3RG78 44-6BB15-1SS1**		**3RG78 42-6BJ21**
1050	Emitter	**3RG78 44-6SB15-0SS0**	**3RG78 44-6SB15-1SS0**		**3RG78 42-6BJ20**
1200	Receiver	**3RG78 44-6BB17-0SS1**	**3RG78 44-6BB17-1SS1**		**3RG78 42-6BK21**
1200	Emitter	**3RG78 44-6SB17-0SS0**	**3RG78 44-6SB17-1SS0**		**3RG78 42-6BK20**

1) For scope of supply see top of page 4/18
► Preferred type, available from stock.

Integrated evaluation

Protection field height	Type	Standard device	Host device		Guest device
mm		Order No.	Order No.		Order No.
1350	Receiver	3RG78 44-6BB20-0SS1	3RG78 44-6BB20-1SS1		3RG78 42-6BL21
1350	Emitter	3RG78 44-6SB20-0SS0	3RG78 44-6SB20-1SS0		3RG78 42-6BL20
1500	Receiver	3RG78 44-6BB22-0SS1	3RG78 44-6BB22-1SS1		3RG78 42-6BM21
1500	Emitter	3RG78 44-6SB22-0SS0	3RG78 44-6SB22-1SS0		3RG78 42-6BM20
1650	Receiver	3RG78 44-6BB24-0SS1	3RG78 44-6BB24-1SS1		3RG78 42-6BN21
1650	Emitter	3RG78 44-6SB24-0SS0	3RG78 44-6SB24-1SS0		3RG78 42-6BN20
1800	Receiver	3RG78 44-6BB26-0SS1	3RG78 44-6BB26-1SS1		3RG78 42-6BP21
1800	Emitter	3RG78 44-6SB26-0SS0	3RG78 44-6SB26-1SS0		3RG78 42-6BP20
Resolution 30 mm					
150	Receiver	3RG78 44-6BD02-0SS1	–		3RG78 42-6DB21
150	Emitter	3RG78 44-6SD02-0SS0	–		3RG78 42-6DB20
225	Receiver	3RG78 44-6BD03-0SS1	3RG78 44-6BD03-1SS1		3RG78 42-6DC21
225	Emitter	3RG78 44-6SD03-0SS0	3RG78 44-6SD03-1SS0		3RG78 42-6DC20
300	Receiver	3RG78 44-6BD04-0SS1	3RG78 44-6BD04-1SS1		3RG78 42-6DD21
300	Emitter	3RG78 44-6SD04-0SS0	3RG78 44-6SD04-1SS0		3RG78 42-6DD20
450	Receiver	3RG78 44-6BD06-0SS1	3RG78 44-6BD06-1SS1	►	3RG78 42-6DE21
450	Emitter	3RG78 44-6SD06-0SS0	3RG78 44-6SD06-1SS0	►	3RG78 42-6DE20
600	Receiver	3RG78 44-6BD08-0SS1	3RG78 44-6BD08-1SS1		3RG78 42-6DF21
600	Emitter	3RG78 44-6SD08-0SS0	3RG78 44-6SD08-1SS0		3RG78 42-6DF20
750	Receiver	3RG78 44-6BD11-0SS1	3RG78 44-6BD11-1SS1		3RG78 42-6DG21
750	Emitter	3RG78 44-6SD11-0SS0	3RG78 44-6SD11-1SS0		3RG78 42-6DG20
900	Receiver	3RG78 44-6BD13-0SS1	3RG78 44-6BD13-1SS1		3RG78 42-6DH21
900	Emitter	3RG78 44-6SD13-0SS0	3RG78 44-6SD13-1SS0		3RG78 42-6DH20
1050	Receiver	3RG78 44-6BD15-0SS1	3RG78 44-6BD15-1SS1		3RG78 42-6DJ21
1050	Emitter	3RG78 44-6SD15-0SS0	3RG78 44-6SD15-1SS0		3RG78 42-6DJ20
1200	Receiver	3RG78 44-6BD17-0SS1	3RG78 44-6BD17-1SS1		3RG78 42-6DK21
1200	Emitter	3RG78 44-6SD17-0SS0	3RG78 44-6SD17-1SS0		3RG78 42-6DK20
1350	Receiver	3RG78 44-6BD20-0SS1	3RG78 44-6BD20-1SS1		3RG78 42-6DL21
1350	Emitter	3RG78 44-6SD20-0SS0	3RG78 44-6SD20-1SS0		3RG78 42-6DL20
1500	Receiver	3RG78 44-6BD22-0SS1	3RG78 44-6BD22-1SS1		3RG78 42-6DM21
1500	Emitter	3RG78 44-6SD22-0SS0	3RG78 44-6SD22-1SS0		3RG78 42-6DM20
1650	Receiver	3RG78 44-6BD24-0SS1	3RG78 44-6BD24-1SS1		3RG78 42-6DN21
1650	Emitter	3RG78 44-6SD24-0SS0	3RG78 44-6SD24-1SS0		3RG78 42-6DN20
1800	Receiver	3RG78 44-6BD26-0SS1	3RG78 44-6BD26-1SS1		3RG78 42-6DP21
1800	Emitter	3RG78 44-6SD26-0SS0	3RG78 44-6SD26-1SS0		3RG78 42-6DP20
Resolution 50 mm					
450	Receiver	3RG78 44-6BE06-0SS1	3RG78 44-6BE06-1SS1		3RG78 42-6EE21
450	Emitter	3RG78 44-6SE06-0SS0	3RG78 44-6SE06-1SS0		3RG78 42-6EE20
600	Receiver	3RG78 44-6BE08-0SS1	3RG78 44-6BE08-1SS1		3RG78 42-6EF21
600	Emitter	3RG78 44-6SE08-0SS0	3RG78 44-6SE08-1SS0		3RG78 42-6EF20
750	Receiver	3RG78 44-6BE11-0SS1	3RG78 44-6BE11-1SS1		3RG78 42-6EG21
750	Emitter	3RG78 44-6SE11-0SS0	3RG78 44-6SE11-1SS0		3RG78 42-6EG20
900	Receiver	3RG78 44-6BE13-0SS1	3RG78 44-6BE13-1SS1		3RG78 42-6EH21
900	Emitter	3RG78 44-6SE13-0SS0	3RG78 44-6SE13-1SS0		3RG78 42-6EH20
1050	Receiver	3RG78 44-6BE15-0SS1	3RG78 44-6BE15-1SS1		3RG78 42-6EJ21
1050	Emitter	3RG78 44-6SE15-0SS0	3RG78 44-6SE15-1SS0		3RG78 42-6EJ20
1200	Receiver	3RG78 44-6BE17-0SS1	3RG78 44-6BE17-1SS1		3RG78 42-6EK21
1200	Emitter	3RG78 44-6SE17-0SS0	3RG78 44-6SE17-1SS0		3RG78 42-6EK20

► Preferred type, available from stock.

Protection field height	Type	Standard device	Host device	Guest device
mm		Order No.	Order No.	Order No.
1350	Receiver	**3RG78 44-6BE20-0SS1**	**3RG78 44-6BE20-1SS1**	**3RG78 42-6EL21**
1350	Emitter	**3RG78 44-6SE20-0SS0**	**3RG78 44-6SE20-1SS0**	**3RG78 42-6EL20**
1500	Receiver	**3RG78 44-6BE22-0SS1**	**3RG78 44-6BE22-1SS1**	**3RG78 42-6EM21**
1500	Emitter	**3RG78 44-6SE22-0SS0**	**3RG78 44-6SE22-1SS0**	**3RG78 42-6EM20**
1650	Receiver	**3RG78 44-6BE24-0SS1**	**3RG78 44-6BE24-1SS1**	**3RG78 42-6EN21**
1650	Emitter	**3RG78 44-6SE24-0SS0**	**3RG78 44-6SE24-1SS0**	**3RG78 42-6EN20**
1800	Receiver	**3RG78 44-6BE26-0SS1**	**3RG78 44-6BE26-1SS1**	**3RG78 42-6EP21**
1800	Emitter	**3RG78 44-6SE26-0SS0**	**3RG78 44-6SE26-1SS0**	**3RG78 42-6EP20**
2100	Receiver	**3RG78 44-6BE28-0SS1**	**3RG78 44-6BE28-1SS1**	**3RG78 42-6ER21**
2100	Emitter	**3RG78 44-6SE28-0SS0**	**3RG78 44-6SE28-1SS0**	**3RG78 42-6ER20**
2400	Receiver	**3RG78 44-6BE31-0SS1**	**3RG78 44-6BE31-1SS1**	**3RG78 42-6ES21**
2400	Emitter	**3RG78 44-6SE31-0SS0**	**3RG78 44-6SE31-1SS0**	**3RG78 42-6ES20**
2700	Receiver	**3RG78 44-6BE33-0SS1**	**3RG78 44-6BE33-1SS1**	**3RG78 42-6ET21**
2700	Emitter	**3RG78 44-6SE33-0SS0**	**3RG78 44-6SE33-1SS0**	**3RG78 42-6ET20**
3000	Receiver	**3RG78 44-6BE35-0SS1**	**3RG78 44-6BE35-1SS1**	**3RG78 42-6EU21**
3000	Emitter	**3RG78 44-6SE35-0SS0**	**3RG78 44-6SE35-1SS0**	**3RG78 42-6EU20**

Light curtains with blanking function package
Transistor output with Brad Harrison connection (MIN Series)[1)2)]

Protection field height	Type	Standard device	Host device	Guest device
mm		Order No.	Order No.	Order No.
Resolution 14 mm				
225	Receiver	**3RG78 44-4BB03-0SS1**	**3RG78 44-4BB03-1SS1**	**3RG78 42-6BC21**
225	Emitter	**3RG78 44-4SB03-0SS0**	**3RG78 44-4SB03-1SS0**	**3RG78 42-6BC20**
300	Receiver	**3RG78 44-4BB04-0SS1**	**3RG78 44-4BB04-1SS1**	**3RG78 42-6BD21**
300	Emitter	**3RG78 44-4SB04-0SS0**	**3RG78 44-4SB04-1SS0**	**3RG78 42-6BD20**
450	Receiver	**3RG78 44-4BB06-0SS1**	**3RG78 44-4BB06-1SS1**	**3RG78 42-6BE21**
450	Emitter	**3RG78 44-4SB06-0SS0**	**3RG78 44-4SB06-1SS0**	**3RG78 42-6BE20**
600	Receiver	**3RG78 44-4BB08-0SS1**	**3RG78 44-4BB08-1SS1**	**3RG78 42-6BF21**
600	Emitter	**3RG78 44-4SB08-0SS0**	**3RG78 44-4SB08-1SS0**	**3RG78 42-6BF20**
750	Receiver	**3RG78 44-4BB11-0SS1**	**3RG78 44-4BB11-1SS1**	**3RG78 42-6BG21**
750	Emitter	**3RG78 44-4SB11-0SS0**	**3RG78 44-4SB11-1SS0**	**3RG78 42-6BG20**
900	Receiver	**3RG78 44-4BB13-0SS1**	**3RG78 44-4BB13-1SS1**	**3RG78 42-6BH21**
900	Emitter	**3RG78 44-4SB13-0SS0**	**3RG78 44-4SB13-1SS0**	**3RG78 42-6BH20**
1050	Receiver	**3RG78 44-4BB15-0SS1**	**3RG78 44-4BB15-1SS1**	**3RG78 42-6BJ21**
1050	Emitter	**3RG78 44-4SB15-0SS0**	**3RG78 44-4SB15-1SS0**	**3RG78 42-6BJ20**
1200	Receiver	**3RG78 44-4BB17-0SS1**	**3RG78 44-4BB17-1SS1**	**3RG78 42-6BK21**
1200	Emitter	**3RG78 44-4SB17-0SS0**	**3RG78 44-4SB17-1SS0**	**3RG78 42-6BK20**
1350	Receiver	**3RG78 44-4BB20-0SS1**	**3RG78 44-4BB20-1SS1**	**3RG78 42-6BL21**
1350	Emitter	**3RG78 44-4SB20-0SS0**	**3RG78 44-4SB20-1SS0**	**3RG78 42-6BL20**
1500	Receiver	**3RG78 44-4BB22-0SS1**	**3RG78 44-4BB22-1SS1**	**3RG78 42-6BM21**
1500	Emitter	**3RG78 44-4SB22-0SS0**	**3RG78 44-4SB22-1SS0**	**3RG78 42-6BM20**
1650	Receiver	**3RG78 44-4BB24-0SS1**	**3RG78 44-4BB24-1SS1**	**3RG78 42-6BN21**
1650	Emitter	**3RG78 44-4SB24-0SS0**	**3RG78 44-4SB24-1SS0**	**3RG78 42-6BN20**
1800	Receiver	**3RG78 44-4BB26-0SS1**	**3RG78 44-4BB26-1SS1**	**3RG78 42-6BP21**
1800	Emitter	**3RG78 44-4SB26-0SS0**	**3RG78 44-4SB26-1SS0**	**3RG78 42-6BP20**

1) Required above all for applications on the NAFTA market
2) For scope of supply see top of page 4/18

Integrated evaluation

Protection field height	Type	Standard device	Host device		Guest device
mm		Order No.	Order No.		Order No.
Resolution 30 mm					
150	Receiver	**3RG78 44-4BD02-0SS1**	**–**		**3RG78 42-6DB21**
150	Emitter	**3RG78 44-4SD02-0SS0**	**–**		**3RG78 42-6DB20**
225	Receiver	**3RG78 44-4BD03-0SS1**	**3RG78 44-4BD03-1SS1**		**3RG78 42-6DC21**
225	Emitter	**3RG78 44-4SD03-0SS0**	**3RG78 44-4SD03-1SS0**		**3RG78 42-6DC20**
300	Receiver	**3RG78 44-4BD04-0SS1**	**3RG78 44-4BD04-1SS1**		**3RG78 42-6DD21**
300	Emitter	**3RG78 44-4SD04-0SS0**	**3RG78 44-4SD04-1SS0**		**3RG78 42-6DD20**
450	Receiver	**3RG78 44-4BD06-0SS1**	**3RG78 44-4BD06-1SS1**	►	**3RG78 42-6DE21**
450	Emitter	**3RG78 44-4SD06-0SS0**	**3RG78 44-4SD06-1SS0**	►	**3RG78 42-6DE20**
600	Receiver	**3RG78 44-4BD08-0SS1**	**3RG78 44-4BD08-1SS1**		**3RG78 42-6DF21**
600	Emitter	**3RG78 44-4SD08-0SS0**	**3RG78 44-4SD08-1SS0**		**3RG78 42-6DF20**
750	Receiver	**3RG78 44-4BD11-0SS1**	**3RG78 44-4BD11-1SS1**		**3RG78 42-6DG21**
750	Emitter	**3RG78 44-4SD11-0SS0**	**3RG78 44-4SD11-1SS0**		**3RG78 42-6DG20**
900	Receiver	**3RG78 44-4BD13-0SS1**	**3RG78 44-4BD13-1SS1**		**3RG78 42-6DH21**
900	Emitter	**3RG78 44-4SD13-0SS0**	**3RG78 44-4SD13-1SS0**		**3RG78 42-6DH20**
1050	Receiver	**3RG78 44-4BD15-0SS1**	**3RG78 44-4BD15-1SS1**		**3RG78 42-6DJ21**
1050	Emitter	**3RG78 44-4SD15-0SS0**	**3RG78 44-4SD15-1SS0**		**3RG78 42-6DJ20**
1200	Receiver	**3RG78 44-4BD17-0SS1**	**3RG78 44-4BD17-1SS1**		**3RG78 42-6DK21**
1200	Emitter	**3RG78 44-4SD17-0SS0**	**3RG78 44-4SD17-1SS0**		**3RG78 42-6DK20**
1350	Receiver	**3RG78 44-4BD20-0SS1**	**3RG78 44-4BD20-1SS1**		**3RG78 42-6DL21**
1350	Emitter	**3RG78 44-4SD20-0SS0**	**3RG78 44-4SD20-1SS0**		**3RG78 42-6DL20**
1500	Receiver	**3RG78 44-4BD22-0SS1**	**3RG78 44-4BD22-1SS1**		**3RG78 42-6DM21**
1500	Emitter	**3RG78 44-4SD22-0SS0**	**3RG78 44-4SD22-1SS0**		**3RG78 42-6DM20**
1650	Receiver	**3RG78 44-4BD24-0SS1**	**3RG78 44-4BD24-1SS1**		**3RG78 42-6DN21**
1650	Emitter	**3RG78 44-4SD24-0SS0**	**3RG78 44-4SD24-1SS0**		**3RG78 42-6DN20**
1800	Receiver	**3RG78 44-4BD26-0SS1**	**3RG78 44-4BD26-1SS1**		**3RG78 42-6DP21**
1800	Emitter	**3RG78 44-4SD26-0SS0**	**3RG78 44-4SD26-1SS0**		**3RG78 42-6DP20**
Resolution 50 mm					
450	Receiver	**3RG78 44-4BE06-0SS1**	**3RG78 44-4BE06-1SS1**		**3RG78 42-6EE21**
450	Emitter	**3RG78 44-4SE06-0SS0**	**3RG78 44-4SE06-1SS0**		**3RG78 42-6EE20**
600	Receiver	**3RG78 44-4BE08-0SS1**	**3RG78 44-4BE08-1SS1**		**3RG78 42-6EF21**
600	Emitter	**3RG78 44-4SE08-0SS0**	**3RG78 44-4SE08-1SS0**		**3RG78 42-6EF20**
750	Receiver	**3RG78 44-4BE11-0SS1**	**3RG78 44-4BE11-1SS1**		**3RG78 42-6EG21**
750	Emitter	**3RG78 44-4SE11-0SS0**	**3RG78 44-4SE11-1SS0**		**3RG78 42-6EG20**
900	Receiver	**3RG78 44-4BE13-0SS1**	**3RG78 44-4BE13-1SS1**		**3RG78 42-6EH21**
900	Emitter	**3RG78 44-4SE13-0SS0**	**3RG78 44-4SE13-1SS0**		**3RG78 42-6EH20**
1050	Receiver	**3RG78 44-4BE15-0SS1**	**3RG78 44-4BE15-1SS1**		**3RG78 42-6EJ21**
1050	Emitter	**3RG78 44-4SE15-0SS0**	**3RG78 44-4SE15-1SS0**		**3RG78 42-6EJ20**
1200	Receiver	**3RG78 44-4BE17-0SS1**	**3RG78 44-4BE17-1SS1**		**3RG78 42-6EK21**
1200	Emitter	**3RG78 44-4SE17-0SS0**	**3RG78 44-4SE17-1SS0**		**3RG78 42-6EK20**
1350	Receiver	**3RG78 44-4BE20-0SS1**	**3RG78 44-4BE20-1SS1**		**3RG78 42-6EL21**
1350	Emitter	**3RG78 44-4SE20-0SS0**	**3RG78 44-4SE20-1SS0**		**3RG78 42-6EL20**
1500	Receiver	**3RG78 44-4BE22-0SS1**	**3RG78 44-4BE22-1SS1**		**3RG78 42-6EM21**
1500	Emitter	**3RG78 44-4SE22-0SS0**	**3RG78 44-4SE22-1SS0**		**3RG78 42-6EM20**
1650	Receiver	**3RG78 44-4BE24-0SS1**	**3RG78 44-4BE24-1SS1**		**3RG78 42-6EN21**
1650	Emitter	**3RG78 44-4SE24-0SS0**	**3RG78 44-4SE24-1SS0**		**3RG78 42-6EN20**
1800	Receiver	**3RG78 44-4BE26-0SS1**	**3RG78 44-4BE26-1SS1**		**3RG78 42-6EP21**
1800	Emitter	**3RG78 44-4SE26-0SS0**	**3RG78 44-4SB26-1SS0**		**3RG78 42-6EP20**

► Preferred type, available from stock.

Protection field height	Type	Standard device	Host device	Guest device
mm		Order No.	Order No.	Order No.
2100	Receiver	**3RG78 44-4BE28-0SS1**	**3RG78 44-4BE28-1SS1**	**3RG78 42-6ER21**
2100	Emitter	**3RG78 44-4SE28-0SS0**	**3RG78 44-4SE28-1SS0**	**3RG78 42-6ER20**
2400	Receiver	**3RG78 44-4BE31-0SS1**	**3RG78 44-4BE31-1SS1**	**3RG78 42-6ES21**
2400	Emitter	**3RG78 44-4SE31-0SS0**	**3RG78 44-4SE31-1SS0**	**3RG78 42-6ES20**
2700	Receiver	**3RG78 44-4BE33-0SS1**	**3RG78 44-4BE33-1SS1**	**3RG78 42-6ET21**
2700	Emitter	**3RG78 44-4SE33-0SS0**	**3RG78 44-4SE33-1SS0**	**3RG78 42-6ET20**
3000	Receiver	**3RG78 44-4BE35-0SS1**	**3RG78 44-4BE35-1SS1**	**3RG78 42-6EU21**
3000	Emitter	**3RG78 44-4SE35-0SS0**	**3RG78 44-4SE35-1SS0**	**3RG78 42-6EU20**

Light curtains with blanking function package
Transistor output with Hirschmann connection[1)]

Protection field height	Type	Standard device	Host device	Guest device
mm		Order No.	Order No.	Order No.
Resolution 14 mm				
150	Receiver	**3RG78 44-2BB02-0SS1**	**–**	**3RG78 42-6BB21**
150	Emitter	**3RG78 44-2SB02-0SS0**	**–**	**3RG78 42-6BB20**
225	Receiver	**3RG78 44-2BB03-0SS1**	**3RG78 44-2BB03-1SS1**	**3RG78 42-6BC21**
225	Emitter	**3RG78 44-2SB03-0SS0**	**3RG78 44-2SB03-1SS0**	**3RG78 42-6BC20**
300	Receiver	**3RG78 44-2BB04-0SS1**	**3RG78 44-2BB04-1SS1**	**3RG78 42-6BD21**
300	Emitter	**3RG78 44-2SB04-0SS0**	**3RG78 44-2SB04-1SS0**	**3RG78 42-6BD20**
450	Receiver	**3RG78 44-2BB06-0SS1**	**3RG78 44-2BB06-1SS1**	**3RG78 42-6BE21**
450	Emitter ►	**3RG78 44-2SB06-0SS0**	**3RG78 44-2SB06-1SS0**	**3RG78 42-6BE20**
600	Receiver	**3RG78 44-2BB08-0SS1**	**3RG78 44-2BB08-1SS1**	**3RG78 42-6BF21**
600	Emitter	**3RG78 44-2SB08-0SS0**	**3RG78 44-2SB08-1SS0**	**3RG78 42-6BF20**
750	Receiver	**3RG78 44-2BB11-0SS1**	**3RG78 44-2BB11-1SS1**	**3RG78 42-6BG21**
750	Emitter	**3RG78 44-2SB11-0SS0**	**3RG78 44-2SB11-1SS0**	**3RG78 42-6BG20**
900	Receiver	**3RG78 44-2BB13-0SS1**	**3RG78 44-2BB13-1SS1**	**3RG78 42-6BH21**
900	Emitter	**3RG78 44-2SB13-0SS0**	**3RG78 44-2SB13-1SS0**	**3RG78 42-6BH20**
1050	Receiver	**3RG78 44-2BB15-0SS1**	**3RG78 44-2BB15-1SS1**	**3RG78 42-6BJ21**
1050	Emitter	**3RG78 44-2SB15-0SS0**	**3RG78 44-2SB15-1SS0**	**3RG78 42-6BJ20**
1200	Receiver	**3RG78 44-2BB17-0SS1**	**3RG78 44-2BB17-1SS1**	**3RG78 42-6BK21**
1200	Emitter	**3RG78 44-2SB17-0SS0**	**3RG78 44-2SB17-1SS0**	**3RG78 42-6BK20**
1350	Receiver	**3RG78 44-2BB20-0SS1**	**3RG78 44-2BB20-1SS1**	**3RG78 42-6BL21**
1350	Emitter	**3RG78 44-2SB20-0SS0**	**3RG78 44-2SB20-1SS0**	**3RG78 42-6BL20**
1500	Receiver	**3RG78 44-2BB22-0SS1**	**3RG78 44-2BB22-1SS1**	**3RG78 42-6BM21**
1500	Emitter	**3RG78 44-2SB22-0SS0**	**3RG78 44-2SB22-1SS0**	**3RG78 42-6BM20**
1650	Receiver	**3RG78 44-2BB24-0SS1**	**3RG78 44-2BB24-1SS1**	**3RG78 42-6BN21**
1650	Emitter	**3RG78 44-2SB24-0SS0**	**3RG78 44-2SB24-1SS0**	**3RG78 42-6BN20**
1800	Receiver	**3RG78 44-2BB26-0SS1**	**3RG78 44-2BB26-1SS1**	**3RG78 42-6BP21**
1800	Emitter	**3RG78 44-2SB26-0SS0**	**3RG78 44-2SB26-1SS0**	**3RG78 42-6BP20**
Resolution 30 mm				
150	Receiver	**3RG78 44-2BD02-0SS1**	**–**	**3RG78 42-6DB21**
150	Emitter	**3RG78 44-2SD02-0SS0**	**–**	**3RG78 42-6DB20**
225	Receiver	**3RG78 44-2BD03-0SS1**	**3RG78 44-2BD03-1SS1**	**3RG78 42-6DC21**
225	Emitter	**3RG78 44-2SD03-0SS0**	**3RG78 44-2SD03-1SS0**	**3RG78 42-6DC20**
300	Receiver	**3RG78 44-2BD04-0SS1**	**3RG78 44-2BD04-1SS1**	**3RG78 42-6DD21**
300	Emitter	**3RG78 44-2SD04-0SS0**	**3RG78 44-2SD04-1SS0**	**3RG78 42-6DD20**
450	Receiver	**3RG78 44-2BD06-0SS1**	**3RG78 44-2BD06-1SS1** ►	**3RG78 42-6DE21**
450	Emitter	**3RG78 44-2SD06-0SS0**	**3RG78 44-2SD06-1SS0** ►	**3RG78 42-6DE20**

1) For scope of supply see top of page 4/18
► Preferred type, available from stock.

Integrated evaluation

Protection field height	Type	Standard device	Host device	Guest device
mm		Order No.	Order No.	Order No.
600	Receiver	**3RG78 44-2BD08-0SS1**	**3RG78 44-2BD08-1SS1**	**3RG78 42-6DF21**
600	Emitter	**3RG78 44-2SD08-0SS0**	**3RG78 44-2SD08-1SS0**	**3RG78 42-6DF20**
750	Receiver	**3RG78 44-2BD11-0SS1**	**3RG78 44-2BD11-1SS1**	**3RG78 42-6DG21**
750	Emitter	**3RG78 44-2SD11-0SS0**	**3RG78 44-2SD11-1SS0**	**3RG78 42-6DG20**
900	Receiver	**3RG78 44-2BD13-0SS1**	**3RG78 44-2BD13-1SS1**	**3RG78 42-6DH21**
900	Emitter	**3RG78 44-2SD13-0SS0**	**3RG78 44-2SD13-1SS0**	**3RG78 42-6DH20**
1050	Receiver	**3RG78 44-2BD15-0SS1**	**3RG78 44-2BD15-1SS1**	**3RG78 42-6DJ21**
1050	Emitter	**3RG78 44-2SD15-0SS0**	**3RG78 44-2SD15-1SS0**	**3RG78 42-6DJ20**
1200	Receiver	**3RG78 44-2BD17-0SS1**	**3RG78 44-2BD17-1SS1**	**3RG78 42-6DK21**
1200	Emitter	**3RG78 44-2SD17-0SS0**	**3RG78 44-2SD17-1SS0**	**3RG78 42-6DK20**
1350	Receiver	**3RG78 44-2BD20-0SS1**	**3RG78 44-2BD20-1SS1**	**3RG78 42-6DL21**
1350	Emitter	**3RG78 44-2SD20-0SS0**	**3RG78 44-2SD20-1SS0**	**3RG78 42-6DL20**
1500	Receiver	**3RG78 44-2BD22-0SS1**	**3RG78 44-2BD22-1SS1**	**3RG78 42-6DM21**
1500	Emitter	**3RG78 44-2SD22-0SS0**	**3RG78 44-2SD22-1SS0**	**3RG78 42-6DM20**
1650	Receiver	**3RG78 44-2BD24-0SS1**	**3RG78 44-2BD24-1SS1**	**3RG78 42-6DN21**
1650	Emitter	**3RG78 44-2SD24-0SS0**	**3RG78 44-2SD24-1SS0**	**3RG78 42-6DN20**
1800	Receiver	**3RG78 44-2BD26-0SS1**	**3RG78 44-2BD26-1SS1**	**3RG78 42-6DP21**
1800	Emitter	**3RG78 44-2SD26-0SS0**	**3RG78 44-2SD26-1SS0**	**3RG78 42-6DP20**
Resolution 50 mm				
450	Receiver	**3RG78 44-2BE06-0SS1**	**3RG78 44-2BE06-1SS1**	**3RG78 42-6EE21**
450	Emitter	**3RG78 44-2SE06-0SS0**	**3RG78 44-2SE06-1SS0**	**3RG78 42-6EE20**
600	Receiver	**3RG78 44-2BE08-0SS1**	**3RG78 44-2BE08-1SS1**	**3RG78 42-6EF21**
600	Emitter	**3RG78 44-2SE08-0SS0**	**3RG78 44-2SE08-1SS0**	**3RG78 42-6EF20**
750	Receiver	**3RG78 44-2BE11-0SS1**	**3RG78 44-2BE11-1SS1**	**3RG78 42-6EG21**
750	Emitter	**3RG78 44-2SE11-0SS0**	**3RG78 44-2SE11-1SS0**	**3RG78 42-6EG20**
900	Receiver	**3RG78 44-2BE13-0SS1**	**3RG78 44-2BE13-1SS1**	**3RG78 42-6EH21**
900	Emitter	**3RG78 44-2SE13-0SS0**	**3RG78 44-2SE13-1SS0**	**3RG78 42-6EH20**
1050	Receiver	**3RG78 44-2BE15-0SS1**	**3RG78 44-2BE15-1SS1**	**3RG78 42-6EJ21**
1050	Emitter	**3RG78 44-2SE15-0SS0**	**3RG78 44-2SE15-1SS0**	**3RG78 42-6EJ20**
1200	Receiver	**3RG78 44-2BE17-0SS1**	**3RG78 44-2BE17-1SS1**	**3RG78 42-6EK21**
1200	Emitter	**3RG78 44-2SE17-0SS0**	**3RG78 44-2SE17-1SS0**	**3RG78 42-6EK20**
1350	Receiver	**3RG78 44-2BE20-0SS1**	**3RG78 44-2BE20-1SS1**	**3RG78 42-6EL21**
1350	Emitter	**3RG78 44-2SE20-0SS0**	**3RG78 44-2SE20-1SS0**	**3RG78 42-6EL20**
1500	Receiver	**3RG78 44-2BE22-0SS1**	**3RG78 44-2BE22-1SS1**	**3RG78 42-6EM21**
1500	Emitter	**3RG78 44-2SE22-0SS0**	**3RG78 44-2SE22-1SS0**	**3RG78 42-6EM20**
1650	Receiver	**3RG78 44-2BE24-0SS1**	**3RG78 44-2BE24-1SS1**	**3RG78 42-6EN21**
1650	Emitter	**3RG78 44-2SE24-0SS0**	**3RG78 44-2SE24-1SS0**	**3RG78 42-6EN20**
1800	Receiver	**3RG78 44-2BE26-0SS1**	**3RG78 44-2BE26-1SS1**	**3RG78 42-6EP21**
1800	Emitter	**3RG78 44-2SE26-0SS0**	**3RG78 44-2SE26-1SS0**	**3RG78 42-6EP20**
2100	Receiver	**3RG78 44-2BE28-0SS1**	**3RG78 44-2BE28-1SS1**	**3RG78 42-6ER21**
2100	Emitter	**3RG78 44-2SE28-0SS0**	**3RG78 44-2SE28-1SS0**	**3RG78 42-6ER20**
2400	Receiver	**3RG78 44-2BE31-0SS1**	**3RG78 44-2BE31-1SS1**	**3RG78 42-6ES21**
2400	Emitter	**3RG78 44-2SE31-0SS0**	**3RG78 44-2SE31-1SS0**	**3RG78 42-6ES20**
2700	Receiver	**3RG78 44-2BE33-0SS1**	**3RG78 44-2BE33-1SS1**	**3RG78 42-6ET21**
2700	Emitter	**3RG78 44-2SE33-0SS0**	**3RG78 44-2SE33-1SS0**	**3RG78 42-6ET20**
3000	Receiver	**3RG78 44-2BE35-0SS1**	**3RG78 44-2BE35-1SS1**	**3RG78 42-6EU21**
3000	Emitter	**3RG78 44-2SE35-0SS0**	**3RG78 44-2SE35-1SS0**	**3RG78 42-6EU20**

Light curtains with blanking function package
Relay output with Hirschmann connection[1)]

Protective zone height mm	Type	Standard device 14 mm resolution Order No.	Standard device 30 mm resolution Order No.
Resolution 14 mm and 30 mm			
300	Receiver	**3RG78 44-8BB04-0SS1**	**3RG78 44-8BD04-0SS1**
300	Emitter	**3RG78 44-2SB04-0SS0**	**3RG78 44-2SD04-0SS0**
450	Receiver	**3RG78 44-8BB06-0SS1**	**3RG78 44-8BD06-0SS1**
450	Emitter ►	**3RG78 44-2SB06-0SS0**	**3RG78 44-2SD06-0SS0**
600	Receiver	**3RG78 44-8BB08-0SS1**	**3RG78 44-8BD08-0SS1**
600	Emitter	**3RG78 44-2SB08-0SS0**	**3RG78 44-2SD08-0SS0**
750	Receiver	**3RG78 44-8BB11-0SS1**	**3RG78 44-8BD11-0SS1**
750	Emitter	**3RG78 44-2SB11-0SS0**	**3RG78 44-2SD11-0SS0**
900	Receiver	**3RG78 44-8BB13-0SS1**	**3RG78 44-8BD13-0SS1**
900	Emitter	**3RG78 44-2SB13-0SS0**	**3RG78 44-2SD13-0SS0**
1050	Receiver	**3RG78 44-8BB15-0SS1**	**3RG78 44-8BD15-0SS1**
1050	Emitter	**3RG78 44-2SB15-0SS0**	**3RG78 44-2SD15-0SS0**
1200	Receiver	**3RG78 44-8BB17-0SS1**	**3RG78 44-8BD17-0SS1**
1200	Emitter	**3RG78 44-2SB17-0SS0**	**3RG78 44-2SD17-0SS0**
1350	Receiver	**3RG78 44-8BB20-0SS1**	**3RG78 44-8BD20-0SS1**
1350	Emitter	**3RG78 44-2SB20-0SS0**	**3RG78 44-2SD20-0SS0**
1500	Receiver	**On request**	**3RG78 44-8BD22-0SS1**
1500	Emitter	**On request**	**3RG78 44-2SD22-0SS0**
1650	Receiver	**On request**	**3RG78 44-8BD24-0SS1**
1650	Emitter	**On request**	**3RG78 44-2SD24-0SS0**
1800	Receiver	**On request**	**3RG78 44-8BD26-0SS1**
1800	Emitter	**On request**	**3RG78 44-2SD26-0SS0**

1) For scope of supply see top of page 4/18
► Preferred type, available from stock.

Integrated evaluation

Light curtains with muting function package Transistor output with M12 plug connection[1)]

Protective zone height	Type	Standard device	Host device		Guest device
mm		Order No.	Order No.		Order No.
Resolution 30 mm					
300	Receiver	**3RG78 44-3MD04-0SS1**	**On request**		**3RG78 42-6DD21**
300	Emitter	**3RG78 44-3SD04-0SS0**	**On request**		**3RG78 42-6DD20**
450	Receiver	**3RG78 44-3MD06-0SS1**	**On request**	►	**3RG78 42-6DE21**
450	Emitter	**3RG78 44-3SD06-0SS0**	**On request**	►	**3RG78 42-6DE20**
600	Receiver	**3RG78 44-3MD08-0SS1**	**On request**		**3RG78 42-6DF21**
600	Emitter	**3RG78 44-3SD08-0SS0**	**On request**		**3RG78 42-6DF20**
750	Receiver	**3RG78 44-3MD11-0SS1**	**On request**		**3RG78 42-6DG21**
750	Emitter	**3RG78 44-3SD11-0SS0**	**On request**		**3RG78 42-6DG20**
900	Receiver	**3RG78 44-3MD13-0SS1**	**On request**		**3RG78 42-6DH21**
900	Emitter	**3RG78 44-3SD13-0SS0**	**On request**		**3RG78 42-6DH20**
1050	Receiver	**3RG78 44-3MD15-0SS1**	**On request**		**3RG78 42-6DJ21**
1050	Emitter	**3RG78 44-3SD15-0SS0**	**On request**		**3RG78 42-6DJ20**
1200	Receiver	**3RG78 44-3MD17-0SS1**	**On request**		**3RG78 42-6DK21**
1200	Emitter	**3RG78 44-3SD17-0SS0**	**On request**		**3RG78 42-6DK20**
1350	Receiver	**3RG78 44-3MD20-0SS1**	**On request**		**3RG78 42-6DL21**
1350	Emitter	**3RG78 44-3SD20-0SS0**	**On request**		**3RG78 42-6DL20**
1500	Receiver	**3RG78 44-3MD22-0SS1**	**On request**		**3RG78 42-6DM21**
1500	Emitter	**3RG78 44-3SD22-0SS0**	**On request**		**3RG78 42-6DM20**
1650	Receiver	**3RG78 44-3MD24-0SS1**	**On request**		**3RG78 42-6DN21**
1650	Emitter	**3RG78 44-3SD24-0SS0**	**On request**		**3RG78 42-6DN20**
1800	Receiver	**3RG78 44-3MD26-0SS1**	**On request**		**3RG78 42-6DP21**
1800	Emitter	**3RG78 44-3SD26-0SS0**	**On request**		**3RG78 42-6DP20**

Light curtains with muting function package Transistor output with cable gland[1)]

Protective zone height	Type	Standard device	Host device		Guest device
mm		Order No.	Order No.		Order No.
Resolution 30 mm					
300	Receiver	**3RG78 44-6MD04-0SS1**	**On request**		**3RG78 42-6DD21**
300	Emitter	**3RG78 44-6SD04-0SS0**	**On request**		**3RG78 42-6DD20**
450	Receiver	**3RG78 44-6MD06-0SS1**	**On request**	►	**3RG78 42-6DE21**
450	Emitter	**3RG78 44-6SD06-0SS0**	**On request**	►	**3RG78 42-6DE20**
600	Receiver	**3RG78 44-6MD08-0SS1**	**On request**		**3RG78 42-6DF21**
600	Emitter	**3RG78 44-6SD08-0SS0**	**On request**		**3RG78 42-6DF20**
750	Receiver	**3RG78 44-6MD11-0SS1**	**On request**		**3RG78 42-6DG21**
750	Emitter	**3RG78 44-6SD11-0SS0**	**On request**		**3RG78 42-6DG20**
900	Receiver	**3RG78 44-6MD13-0SS1**	**On request**		**3RG78 42-6DH21**
900	Emitter	**3RG78 44-6SD13-0SS0**	**On request**		**3RG78 42-6DH20**
1050	Receiver	**3RG78 44-6MD15-0SS1**	**On request**		**3RG78 42-6DJ21**
1050	Emitter	**3RG78 44-6SD15-0SS0**	**On request**		**3RG78 42-6DJ20**
1200	Receiver	**3RG78 44-6MD17-0SS1**	**On request**		**3RG78 42-6DK21**
1200	Emitter	**3RG78 44-6SD17-0SS0**	**On request**		**3RG78 42-6DK20**
1350	Receiver	**3RG78 44-6MD20-0SS1**	**On request**		**3RG78 42-6DL21**
1350	Emitter	**3RG78 44-6SD20-0SS0**	**On request**		**3RG78 42-6DL20**
1500	Receiver	**3RG78 44-6MD22-0SS1**	**On request**		**3RG78 42-6DM21**
1500	Emitter	**3RG78 44-6SD22-0SS0**	**On request**		**3RG78 42-6DM20**

1) For scope of supply see top of page 4/18
► Preferred type, available from stock.

Protective zone height	Type	Standard device	Host device	Guest device
mm		Order No.	Order No.	Order No.
Resolution 30 mm				
1650	Receiver	**3RG78 44-6MD24-0SS1**	**On request**	**3RG78 42-6DN21**
1650	Emitter	**3RG78 44-6SD24-0SS0**	**On request**	**3RG78 42-6DN20**
1800	Receiver	**3RG78 44-6MD26-0SS1**	**On request**	**3RG78 42-6DP21**
1800	Emitter	**3RG78 44-6SD26-0SS0**	**On request**	**3RG78 42-6DP20**

Light grids with muting function package
Transistor output with cable gland[1)]

No. of beams	Beam distance	Type	Standard device
	mm		Order No.
Range 0.8 … 18 m			
4-beam	300	Receiver	**3RG78 44-6MM50-0SS1**
4-beam	300	Emitter	**3RG78 44-6SM50-0SS0**
3-beam	400	Receiver	**3RG78 44-6MP50-0SS1**
3-beam	400	Emitter	**3RG78 44-6SP50-0SS0**
2-beam	500	Receiver	**3RG78 44-6MS50-0SS1**
2-beam	500	Emitter	**3RG78 44-6SS50-0SS0**
Range 6 … 70 m			
4-beam	300	Receiver	**3RG78 44-6MM51-0SS1**
4-beam	300	Emitter	**3RG78 44-6SM51-0SS0**
3-beam	400	Receiver	**3RG78 44-6MP51-0SS1**
3-beam	400	Emitter	**3RG78 44-6SP51-0SS0**
2-beam	500	Receiver	**3RG78 44-6MS51-0SS1**
2-beam	500	Emitter	**3RG78 44-6SS51-0SS0**

Transceiver with muting function package
Transistor output with cable gland[1)]

No. of beams	Beam distance	Type	Standard device
	mm		Order No.
Range 6.5 m			
2-beam	500	Transceiver	**3RG78 44-6MS50-0ST0**
2-beam	500	Transceiver with integrated LED	**3RG78 44-6MS50-0MT0**
Reflecting mirrors for transceivers			**3RG78 48-1TL**

Light curtains with muting function package
Transistor output with Brad Harrison connection (MIN Series)[1)2)]

Protective zone height	Type	Standard device	Host device		Guest device
mm		Order No.	Order No.		Order No.
Resolution 30 mm					
300	Receiver	**3RG78 44-4MD04-0SS1**	**On request**		**3RG78 42-6DD21**
300	Emitter	**3RG78 44-4SD04-0SS0**	**On request**		**3RG78 42-6DD20**
450	Receiver	**3RG78 44-4MD06-0SS1**	**On request**	►	**3RG78 42-6DE21**
450	Emitter	**3RG78 44-4SD06-0SS0**	**On request**	►	**3RG78 42-6DE20**
600	Receiver	**3RG78 44-4MD08-0SS1**	**On request**		**3RG78 42-6DF21**
600	Emitter	**3RG78 44-4SD08-0SS0**	**On request**		**3RG78 42-6DF20**
750	Receiver	**3RG78 44-4MD11-0SS1**	**On request**		**3RG78 42-6DG21**
750	Emitter	**3RG78 44-4SD11-0SS0**	**On request**		**3RG78 42-6DG20**
900	Receiver	**3RG78 44-4MD13-0SS1**	**On request**		**3RG78 42-6DH21**
900	Emitter	**3RG78 44-4SD13-0SS0**	**On request**		**3RG78 42-6DH20**

1) For scope of supply see top of page 4/18.
2) Required above all for applications on the NAFTA market.
► Preferred type, available from stock.

Integrated evaluation

Protective zone height mm	Type	Standard device Order No.	Host device Order No.		Guest device Order No.
Resolution 30 mm					
1050	Receiver	**3RG78 44-4MD15-0SS1**	**On request**		**3RG78 42-6DJ21**
1050	Emitter	**3RG78 44-4SD15-0SS0**	**On request**		**3RG78 42-6DJ20**
1200	Receiver	**3RG78 44-4MD17-0SS1**	**On request**		**3RG78 42-6DK21**
1200	Emitter	**3RG78 44-4SD17-0SS0**	**On request**		**3RG78 42-6DK20**
1350	Receiver	**3RG78 44-4MD20-0SS1**	**On request**		**3RG78 42-6DL21**
1350	Emitter	**3RG78 44-4SD20-0SS0**	**On request**		**3RG78 42-6DL20**
1500	Receiver	**3RG78 44-4MD22-0SS1**	**On request**		**3RG78 42-6DM21**
1500	Emitter	**3RG78 44-4SD22-0SS0**	**On request**		**3RG78 42-6DM20**
1650	Receiver	**3RG78 44-4MD24-0SS1**	**On request**		**3RG78 42-6DN21**
1650	Emitter	**3RG78 44-4SD24-0SS0**	**On request**		**3RG78 42-6DN20**
1800	Receiver	**3RG78 44-4MD26-0SS1**	**On request**		**3RG78 42-6DP21**
1800	Emitter	**3RG78 44-4SD26-0SS0**	**On request**		**3RG78 42-6DP20**

Light grids with muting function package
Transistor output with Brad Harrison connection (MIN Series)[1)2)]

No. of beams	Beam distance mm	Type	Standard device Order No.
Range 0.8 … 18 m			
4-beam	300	Receiver	**3RG78 44-4MM50-0SS1**
4-beam	300	Emitter	**3RG78 44-4SM50-0SS0**
3-beam	400	Receiver	**3RG78 44-4MP50-0SS1**
3-beam	400	Emitter	**3RG78 44-4SP50-0SS0**
2-beam	500	Receiver	**3RG78 44-4MS50-0SS1**
2-beam	500	Emitter	**3RG78 44-4SS50-0SS0**

Light curtains with muting function package
Transistor output with Hirschmann connection [2)]

No. of beams	Beam distance mm	Type	Standard device Order No.
Range 6 … 70 m			
4-beam	300	Receiver	**3RG78 44-2MM51-0SS1**
4-beam	300	Emitter	**3RG78 44-2SM51-0SS0**
3-beam	400	Receiver	**3RG78 44-2MP51-0SS1**
3-beam	400	Emitter	**3RG78 44-2SP51-0SS0**
2-beam	500	Receiver	**3RG78 44-2MS51-0SS1**
2-beam	500	Emitter	**3RG78 44-2SS51-0SS0**

Light curtains with muting function package
Relay output with Hirschmann connection [2)]

Protective zone height mm	Type	Standard device Order No.	Host device Order No.		Guest device Order No.
Resolution 30 mm					
300	Receiver	**3RG78 44-8MD04-0SS1**	**On request**		**3RG78 42-6DD21**
300	Emitter	**3RG78 44-2SD04-0SS0**	**On request**		**3RG78 42-6DD20**
450	Receiver	**3RG78 44-8MD06-0SS1**	**On request**	►	**3RG78 42-6DE21**
450	Emitter	**3RG78 44-2SD06-0SS0**	**On request**	►	**3RG78 42-6DE20**

1) Required above all for applications on the NAFTA market.
2) For scope of supply see top of page 4/18.
► Preferred type, available from stock.

Protective zone height mm	Type	Standard device Order No.	Host device Order No.		Guest device Order No.
Resolution 30 mm					
600	Receiver	**3RG78 44-8MD08-0SS1**	**On request**		**3RG78 42-6DF21**
600	Emitter	**3RG78 44-2SD08-0SS0**	**On request**		**3RG78 42-6DF20**
750	Receiver	**3RG78 44-8MD11-0SS1**	**On request**		**3RG78 42-6DG21**
750	Emitter	**3RG78 44-2SD11-0SS0**	**On request**		**3RG78 42-6DG20**
900	Receiver	**3RG78 44-8MD13-0SS1**	**On request**		**3RG78 42-6DH21**
900	Emitter	**3RG78 44-2SD13-0SS0**	**On request**		**3RG78 42-6DH20**
1050	Receiver	**3RG78 44-8MD15-0SS1**	**On request**		**3RG78 42-6DJ21**
1050	Emitter	**3RG78 44-2SD15-0SS0**	**On request**		**3RG78 42-6DJ20**
1200	Receiver	**3RG78 44-8MD17-0SS1**	**On request**		**3RG78 42-6DK21**
1200	Emitter	**3RG78 44-2SD17-0SS0**	**On request**		**3RG78 42-6DK20**
1350	Receiver	**3RG78 44-8MD20-0SS1**	**On request**		**3RG78 42-6DL21**
1350	Emitter	**3RG78 44-2SD20-0SS0**	**On request**		**3RG78 42-6DL20**
1500	Receiver	**3RG78 44-8MD22-0SS1**	**On request**		**3RG78 42-6DM21**
1500	Emitter	**3RG78 44-2SD22-0SS0**	**On request**		**3RG78 42-6DM20**
1650	Receiver	**3RG78 44-8MD24-0SS1**	**On request**		**3RG78 42-6DN21**
1650	Emitter	**3RG78 44-2SD24-0SS0**	**On request**		**3RG78 42-6DN20**
1800	Receiver	**3RG78 44-8MD26-0SS1**	**On request**		**3RG78 42-6DP21**
1800	Emitter	**3RG78 44-2SD26-0SS0**	**On request**		**3RG78 42-6DP20**

Light curtains with Muting function package
Relay output with Hirschmann connection and integrated LED [1)]

Protective zone height mm	Type	Standard device Order No.	Host device Order No.		Guest device Order No.
Resolution 30 mm					
300	Receiver	**3RG78 44-8MD04-0KS1**	**On request**		**3RG78 42-6DD21**
300	Emitter	**3RG78 44-2SD04-0SS0**	**On request**		**3RG78 42-6DD20**
450	Receiver	**3RG78 44-8MD06-0KS1**	**On request**	►	**3RG78 42-6DE21**
450	Emitter	**3RG78 44-2SD06-0SS0**	**On request**	►	**3RG78 42-6DE20**
600	Receiver	**3RG78 44-8MD08-0KS1**	**On request**		**3RG78 42-6DF21**
600	Emitter	**3RG78 44-2SD08-0SS0**	**On request**		**3RG78 42-6DF20**
750	Receiver	**3RG78 44-8MD11-0KS1**	**On request**		**3RG78 42-6DG21**
750	Emitter	**3RG78 44-2SD11-0SS0**	**On request**		**3RG78 42-6DG20**
900	Receiver	**3RG78 44-8MD13-0KS1**	**On request**		**3RG78 42-6DH21**
900	Emitter	**3RG78 44-2SD13-0SS0**	**On request**		**3RG78 42-6DH20**
1050	Receiver	**3RG78 44-8MD15-0KS1**	**On request**		**3RG78 42-6DJ21**
1050	Emitter	**3RG78 44-2SD15-0SS0**	**On request**		**3RG78 42-6DJ20**
1200	Receiver	**3RG78 44-8MD17-0KS1**	**On request**		**3RG78 42-6DK21**
1200	Emitter	**3RG78 44-2SD17-0SS0**	**On request**		**3RG78 42-6DK20**

Light grids with Muting function package
Transistor output with M12 plug connection[1)]

No. of beams	Beam distance mm	Type	Standard device Order No.
Range 0.8 … 18 m			
4-beam	300	Receiver	**3RG78 44-3MM50-0SS1**
4-beam	300	Emitter	**3RG78 44-3SM50-0SS0**
3-beam	400	Receiver	**3RG78 44-3MP50-0SS1**
3-beam	400	Emitter	**3RG78 44-3SP50-0SS0**
2-beam	500	Receiver	**3RG78 44-3MS50-0SS1**
2-beam	500	Emitter	**3RG78 44-3SS50-0SS0**

1) For scope of supply see top of page 4/18.
► Preferred type, available from stock.

Integrated evaluation

Light grids with Muting function package Relay output with Hirschmann connection[1)]

No. of beams	Beam distance	Type		Standard device
	mm			Order No.
Range 0.8 … 18 m				
4-beam	300	Receiver	►	**3RG78 44-8MM50-0SS1**
4-beam	300	Emitter	►	**3RG78 44-2SM50-0SS0**
3-beam	400	Receiver		**3RG78 44-8MP50-0SS1**
3-beam	400	Emitter		**3RG78 44-2SP50-0SS0**
2-beam	500	Receiver		**3RG78 44-8MS50-0SS1**
2-beam	500	Emitter		**3RG78 44-2SS50-0SS0**
Range 6 … 70 m				
4-beam	300	Receiver		**3RG78 44-8MM51-0SS1**
4-beam	300	Emitter		**3RG78 44-2SM51-0SS0**
3-beam	400	Receiver		**3RG78 44-8MP51-0SS1**
3-beam	400	Emitter		**3RG78 44-2SP51-0SS0**
2-beam	500	Receiver		**3RG78 44-8MS51-0SS1**
2-beam	500	Emitter		**3RG78 44-2SS51-0SS0**

Light grids with Muting function package Relay output with Hirschmann connection and integrated LED[1)]

No. of beams	Beam distance	Type	Standard device
	mm		Order No.
Range 0.8 … 18 m			
4-beam	300	Receiver	**3RG78 44-8MM50-0KS1**
4-beam	300	Emitter	**3RG78 44-2SM50-0SS0**
3-beam	400	Receiver	**3RG78 44-8MP50-0KS1**
3-beam	400	Emitter	**3RG78 44-2SP50-0SS0**
2-beam	500	Receiver	**3RG78 44-8MS50-0KS1**
2-beam	500	Emitter	**3RG78 44-2SS50-0SS0**

1) For scope of supply see top of page 4/18.
► Preferred type, available from stock.

Transceivers with Muting function package
Transistor output with M12 plug connection[1)]

No. of beams	Beam distance	Type		Standard device
	mm			Order No.
Range 6.5 m				
2-beam	500	Transceiver		**3RG78 44-3MS50-0ST0**
2-beam	500	Transceiver with integrated LED		**3RG78 44-3MS50-0MT0**
Reflecting mirrors for transceivers				**3RG78 48-1TL**

Transceivers with Muting function package
Relay output with Hirschmann connection[1)]

No. of beams	Beam distance	Type		Standard device
	mm			Order No.
Range 6.5 m				
2-beam	500	Transceiver	►	**3RG78 44-8MS50-0ST0**
2-beam	500	Transceiver with integrated LED	►	**3RG78 44-8MS50-0MT0**
Reflecting mirrors for transceivers				**3RG78 48-1TL**

1) For scope of supply see top of page 4/18.
► Preferred type, available from stock.

Integrated evaluation

Light curtains with sequence control system function package Transistor output with M12 plug connection[1)]

Protection field height	Type	Standard device 14 mm resolution	Host device 14 mm resolution
mm		Order No.	Order No.
Resolution 14 mm			
300	Receiver	**3RG78 44-3TB04-0SS1**	**3RG78 44-3TB04-1SS1**
300	Emitter	**3RG78 44-3SB04-0SS0**	**3RG78 44-3SB04-1SS0**
450	Receiver	**3RG78 44-3TB06-0SS1**	**3RG78 44-3TB06-1SS1**
450	Emitter	**3RG78 44-3SB06-0SS0**	**3RG78 44-3SB06-1SS0**
600	Receiver	**3RG78 44-3TB08-0SS1**	**3RG78 44-3TB08-1SS1**
600	Emitter	**3RG78 44-3SB08-0SS0**	**3RG78 44-3SB08-1SS0**
750	Receiver	**3RG78 44-3TB11-0SS1**	**3RG78 44-3TB11-1SS1**
750	Emitter	**3RG78 44-3SB11-0SS0**	**3RG78 44-3SB11-1SS0**
900	Receiver	**3RG78 44-3TB13-0SS1**	**3RG78 44-3TB13-1SS1**
900	Emitter	**3RG78 44-3SB13-0SS0**	**3RG78 44-3SB13-1SS0**

Additional products on request.

Light curtains with sequence control system function package Relay output with Hirschmann connection[1)]

Protection field height	Type	Standard device 14 mm resolution	Standard device 30 mm resolution
mm		Order No.	Order No.
Resolution 14 mm and 30 mm			
300	Receiver	**3RG78 44-8TB04-0SS1**	**3RG78 44-8TD04-0SS1**
300	Emitter	**3RG78 44-2SB04-0SS0**	**3RG78 44-2SD04-0SS0**
450	Receiver	**3RG78 44-8TB06-0SS1**	**3RG78 44-8TD06-0SS1**
450	Emitter ►	**3RG78 44-2SB06-0SS0**	**3RG78 44-2SD06-0SS0**
600	Receiver	**3RG78 44-8TB08-0SS1**	**3RG78 44-8TD08-0SS1**
600	Emitter	**3RG78 44-2SB08-0SS0**	**3RG78 44-2SD08-0SS0**
750	Receiver	**3RG78 44-8TB11-0SS1**	**3RG78 44-8TD11-0SS1**
750	Emitter	**3RG78 44-2SB11-0SS0**	**3RG78 44-2SD11-0SS0**
900	Receiver	**3RG78 44-8TB13-0SS1**	**3RG78 44-8TD13-0SS1**
900	Emitter	**3RG78 44-2SB13-0SS0**	**3RG78 44-2SD13-0SS0**

Additional products on request.

1) For scope of supply see top of page 4/18.
► Preferred type, available from stock.

Dimensions

3RG78 44 standard light curtains, 3RG78 44 light grids

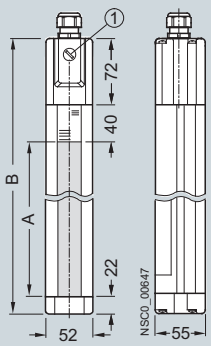

① Pg 9 cover (receiver only, for local interface)

A Protection field height (see Selection and Ordering data)

B Overall length = Protection field height A + 134 mm)

3RG78 48-1TL reflecting mirror

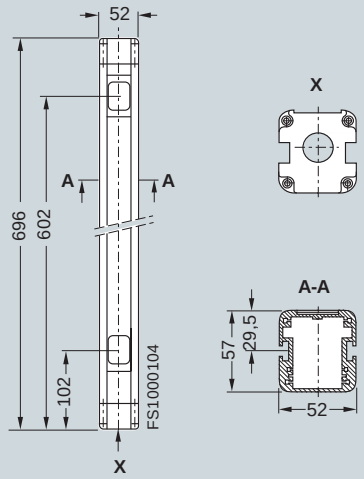

3RG78 44 light grids, additional dimensions

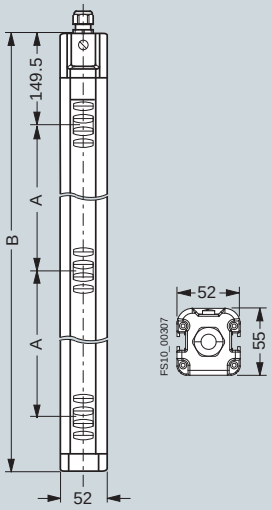

Additional dimensions for light grids only:

Type	B	A	Beams
3RG78 44-..M	1184	300	4
3RG78 44-..P	1034	400	3
3RG78 44-..S	734	500	2

3RG78 48-1TL reflecting mirror (left) and muting transceiver (right)

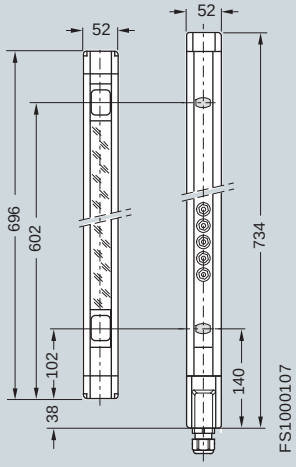

4

SIMATIC FS400 light curtains and light grids

3RG78 45 series, type 4

Initegrated evaluation

Overview

3RG78 45 light curtains and light grids with integrated evaluation for type 4 in accordance with IEC/EN 61496

- With "Standard" function package
- Resolutions: 14, 30, 50, and 90 mm
- Protection field height: 150 mm to 3000 mm
- 2-beam, 3-beam or 4-beam light grids
- Cascading of host and guest devices for greater protection field heights or lengths or for an angular arrangement (optional).

Two standard 3RG78 48-0AB mounting brackets each are enclosed with all devices (can also be ordered as accessories see page 4/92).

4

3RG78 45 program overview

Unit type	Function package	Output	Connection type	For light curtains: Resolution For light grids and transceivers: Range				See page
				14 mm	30 mm	50 mm	90 mm	
Light curtains	Standard	Transistor	M12 plug connector	✔	✔	✔	✔	4/36
Light grids	Standard	Transistor	M12 plug connector	0.8 ... 18 m; 6 ... 60 m				4/39
Transceivers	Standard	Transistor	M12 plug connector	6.5 m				4/39
Light curtains	Standard	Transistor	Hirschmann	✔	✔	–	–	4/39
Light grids	Standard	Transistor	Hirschmann	0.8 ... 18 m; 6 ... 60 m				4/41
Transceivers	Standard	Transistor	Hirschmann	6.5 m				4/41
Light curtains	Standard	Transistor	Brad Harrison (MIN)[1]	✔	✔	✔	✔	4/41
Light grids	Standard	Transistor	Brad Harrison (MIN)[1]	0.8 ... 18 m; 6 ... 60 m				4/44
Transceivers	Standard	Transistor	Brad Harrison (MIN)[1]	6.5 m				4/44
Light curtains	Standard	Transistor	Cable gland	✔	✔	✔	✔	4/45
Light grids	Standard	Transistor	Cable gland	0.8 ... 18 m; 6 ... 60 m				4/47
Transceivers	Standard	Transistor	Cable gland	6.5 m				4/47
Accessories								
Electrical connection								
• Hirschmann type cables and cable plugs								4/94
• Brad Harrison type cable (MIN series)								4/94
• Connecting cable with M12 connection								4/95
Assembly materials								
• Fixing columns, reflecting mirror								4/91
• Muting mounting systems								4/92
• Muting accessories								4/95
Laser alignment assistance, diagnostic software								4/93

1) Required primarily for applications in the NAFTA market

Technical specifications

Type	3RG78 45
Safety category to EN, IEC 61496-1, -3	Type 4 (self-monitoring)
Detection capability (resolution)	14 mm, 30 mm, 50 mm, 90 mm or whole person with 2, 3 or 4 beams
Protection field height	
• for 14 and 30 mm resolution	150 ... 1800 mm
• for 50 mm resolution	450 ... 3000 mm
• for 90 mm resolution	750 ... 3000 mm
Protection field width, sensing field	
• for 14 mm resolution	0.3 ... 6 m
• for 30, 50 and 90 mm resolution	0.8 ... 18 m
• for 18 m light grid	0.8 ... 18 m
• for 60 m light grid	6 ... 60 m
Supply voltage (emitter and receiver)	24 V DC ± 20% (external power pack with safe isolation and 20 ms voltage power loss ride-through)
Current consumption	
• Emitter	75 mA
• Receiver	180 mA (without external load)
Vibration resistance	5 *g*, 10 ... 55 Hz to IEC/EN 60068-2-6
Shock resistance	10 *g*, 16 ms to IEC/EN 60068-2-29
Infrared stray light suppression	2 procedures may be selected
• Standard	High suppression
• d-scan	Very high suppression (response time increases in units with more than 15 beams)
Synchronization between emitter and receiver	Optical; 2 transmission channels can be selected
Ambient temperature	
• Operation	0 ... +55 °C
• Storage	–25 ... +70 °C
Humidity	15 ... 95%
Degree of protection	IP65
Electrical connection	via Pg 13 screw-type terminals and pluggable wiring space

Type	3RG78 45
Connecting cable	
• Emitter	7-pole: 0.5 ... 1.0 mm^2
• Receiver	7-pole: 0.5 ... 1.0 mm^2 (shielded, if necessary)
Cable length for 1.0 mm^2	100 m
Inputs	
Emitter test input	Closed-circuit principle
Minimum opening duration	50 ms
Outputs	
Safety outputs	2 failsafe pnp outputs with cross-circuit monitoring (short circuit proof)
Output voltage $U_{a\,min}$	U_{vers} –2.7 V
Output current $I_{a\,max}$	0.3 A
Peak current	0.4 A
Continuous current	
• at 35 °C	0.3 A
• at 55 °C	0.22 A
Max. load capacity per output	300 nF (100 nF at channel 2)
Response time from the protection field interrupt to disconnection of the safety outputs	Increases with higher number of beams
• for 14 mm resolution	7 ... 39 ms (d-scan 10 ... 78 ms)
• for 30 mm resolution	7 ... 20 ms (d-scan 10 ... 39 ms)
• for 50 mm resolution	17 ms (d-scan 33 ms)
• for 90 mm resolution	13 ms (d-scan 20 ms)
• for 2, 3, or 4-beam light grids	5 ms (d-scan 8 ms)
Reactivation time from release of the protection field to connection of the safety outputs	
• For all resolutions	0.5 ms
• After very brief protection field interrupts	100 ms
Pollution and error message output	pnp output, short circuit proof
Output current, max.	70 mA
Safety and diagnostic interfaces	RS485, 57.6 kBaud

Application of the EN ISO 13849-1 standard: 2006 "Safety of machinery" for 3RG78 45 light curtains and light grids

	Protection field height/number of beams	PL 13849-1	Category ISO 13849-1	Cat. 954-1	PFH_D	$T_{M/years}$
3RG78 45-... light grids	4-beam	e	4	4	6.6 x 10^{-9}	20
3RG78 45-... light curtain	900 mm	e	4	4	7.3 x 10^{-9}	20
3RG78 45-... light curtain	1800 mm	e	4	4	8.3 x 10^{-9}	20
3RG78 45-... light curtain	3000 mm	e	4	4	9.5 x 10^{-9}	20

Initegrated evaluation

Explanation

PFH_D = Probability of dangerous failure per hour

PL = Performance level
Discrete level used to specify the ability of safety-related parts of control systems to perform a safety function under foreseeable conditions: From PL "a" (highest probability of failure) to PL "e" (lowest probability of failure).

For further explanations, see the brochure "European machinery directive – implemented easily", Order No. E20001-A230-M103-V1-7600.

Ordering notes

Included in the scope of supply:

3RG78 45 light curtains with standard function package	
Emitter	3RG78 48-0AB mounting bracket set and emitter insert
• in addition for transistor output and Hirschmann connection	7-pole cable plug
Receiver	3RG78 48-0AB mounting bracket set, operating instructions/data sheets
• in addition for 14 mm and 30 mm resolution	3RG78 48-0AH test rod
• in addition for transistor output and Hirschmann connection	7-pole cable plug
Guest devices of the 3RG78 42 series	
Emitter	3RG78 48-0AB mounting bracket set
Receiver	3RG78 48-0AB mounting bracket set
• in addition for 14 mm and 30 mm resolution	3RG78 48-0AH test rod
3RG78 45 light grids with standard function package	
Emitter	3RG78 48-0AB mounting bracket set and emitter insert
• in addition for transistor output and Hirschmann connection	7-pole cable plug
Receiver	3RG78 48-0AB mounting bracket set, operating instructions/data sheets
• in addition for transistor output and Hirschmann connection	7-pole cable plug
3RG78 45 transceiver with standard function package	
Transceiver	3RG78 48-0AB mounting bracket set, operating instructions/data sheets
• in addition for transistor output and Hirschmann connection	7-pole cable plug

Selection and Ordering data

Light curtains with standard function package
Transistor output with M12 plug connection[1)]

Protection field height	Type	Standard device	Host device	Guest device
mm		Order No.	Order No.	Order No.
Resolution 14 mm				
150	Receiver	**3RG78 45-3BB01**	**–**	**3RG78 42-6BB21**
150	Emitter	**3RG78 45-3BB00**	**–**	**3RG78 42-6BB20**
225	Receiver	**3RG78 45-3BC01**	**3RG78 45-3BC11**	**3RG78 42-6BC21**
225	Emitter	**3RG78 45-3BC00**	**3RG78 45-3BC10**	**3RG78 42-6BC20**
300	Receiver	**3RG78 45-3BD01**	**3RG78 45-3BD11**	**3RG78 42-6BD21**
300	Emitter	**3RG78 45-3BD00**	**3RG78 45-3BD10**	**3RG78 42-6BD20**
450	Receiver	**3RG78 45-3BE01**	**3RG78 45-3BE11**	**3RG78 42-6BE21**
450	Emitter	**3RG78 45-3BE00**	**3RG78 45-3BE10**	**3RG78 42-6BE20**
600	Receiver	**3RG78 45-3BF01**	**3RG78 45-3BF11**	**3RG78 42-6BF21**
600	Emitter	**3RG78 45-3BF00**	**3RG78 45-3BF10**	**3RG78 42-6BF20**
750	Receiver	**3RG78 45-3BG01**	**3RG78 45-3BG11**	**3RG78 42-6BG21**
750	Emitter	**3RG78 45-3BG00**	**3RG78 45-3BG10**	**3RG78 42-6BG20**
900	Receiver	**3RG78 45-3BH01**	**3RG78 45-3BH11**	**3RG78 42-6BH21**
900	Emitter	**3RG78 45-3BH00**	**3RG78 45-3BH10**	**3RG78 42-6BH20**

1) For scope of supply see top of page 4/36

Protection field height	Type	Standard device	Host device		Guest device
mm		Order No.	Order No.		Order No.
1050	Receiver	**3RG78 45-3BJ01**	**3RG78 45-3BJ11**		**3RG78 42-6BJ21**
1050	Emitter	**3RG78 45-3BJ00**	**3RG78 45-3BJ10**		**3RG78 42-6BJ20**
1200	Receiver	**3RG78 45-3BK01**	**3RG78 45-3BK11**		**3RG78 42-6BK21**
1200	Emitter	**3RG78 45-3BK00**	**3RG78 45-3BK10**		**3RG78 42-6BK20**
1350	Receiver	**3RG78 45-3BL01**	**3RG78 45-3BL11**		**3RG78 42-6BL21**
1350	Emitter	**3RG78 45-3BL00**	**3RG78 45-3BL10**		**3RG78 42-6BL20**
1500	Receiver	**3RG78 45-3BM01**	**3RG78 45-3BM11**		**3RG78 42-6BM21**
1500	Emitter	**3RG78 45-3BM00**	**3RG78 45-3BM10**		**3RG78 42-6BM20**
1650	Receiver	**3RG78 45-3BN01**	**3RG78 45-3BN11**		**3RG78 42-6BN21**
1650	Emitter	**3RG78 45-3BN00**	**3RG78 45-3BN10**		**3RG78 42-6BN20**
1800	Receiver	**3RG78 45-3BP01**	**3RG78 45-3BP11**		**3RG78 42-6BP21**
1800	Emitter	**3RG78 45-3BP00**	**3RG78 45-3BP10**		**3RG78 42-6BP20**
Resolution 30 mm					
150	Receiver	**3RG78 45-3DB01**	**–**		**3RG78 42-6DB21**
150	Emitter	**3RG78 45-3DB00**	**–**		**3RG78 42-6DB20**
225	Receiver	**3RG78 45-3DC01**	**3RG78 45-3DC11**		**3RG78 42-6DC21**
225	Emitter	**3RG78 45-3DC00**	**3RG78 45-3DC10**		**3RG78 42-6DC20**
300	Receiver	**3RG78 45-3DD01**	**3RG78 45-3DD11**		**3RG78 42-6DD21**
300	Emitter	**3RG78 45-3DD00**	**3RG78 45-3DD10**		**3RG78 42-6DD20**
450	Receiver	**3RG78 45-3DE01**	**3RG78 45-3DE11**	►	**3RG78 42-6DE21**
450	Emitter	**3RG78 45-3DE00**	**3RG78 45-3DE10**	►	**3RG78 42-6DE20**
600	Receiver	**3RG78 45-3DF01**	**3RG78 45-3DF11**		**3RG78 42-6DF21**
600	Emitter	**3RG78 45-3DF00**	**3RG78 45-3DF10**		**3RG78 42-6DF20**
750	Receiver	**3RG78 45-3DG01**	**3RG78 45-3DG11**		**3RG78 42-6DG21**
750	Emitter	**3RG78 45-3DG00**	**3RG78 45-3DG10**		**3RG78 42-6DG20**
900	Receiver	**3RG78 45-3DH01**	**3RG78 45-3DH11**		**3RG78 42-6DH21**
900	Emitter	**3RG78 45-3DH00**	**3RG78 45-3DH10**		**3RG78 42-6DH20**
1050	Receiver	**3RG78 45-3DJ01**	**3RG78 45-3DJ11**		**3RG78 42-6DJ21**
1050	Emitter	**3RG78 45-3DJ00**	**3RG78 45-3DJ10**		**3RG78 42-6DJ20**
1200	Receiver	**3RG78 45-3DK01**	**3RG78 45-3DK11**		**3RG78 42-6DK21**
1200	Emitter	**3RG78 45-3DK00**	**3RG78 45-3DK10**		**3RG78 42-6DK20**
1350	Receiver	**3RG78 45-3DL01**	**3RG78 45-3DL11**		**3RG78 42-6DL21**
1350	Emitter	**3RG78 45-3DL00**	**3RG78 45-3DL10**		**3RG78 42-6DL20**
1500	Receiver	**3RG78 45-3DM01**	**3RG78 45-3DM11**		**3RG78 42-6DM21**
1500	Emitter	**3RG78 45-3DM00**	**3RG78 45-3DM10**		**3RG78 42-6DM20**
1650	Receiver	**3RG78 45-3DN01**	**3RG78 45-3DN11**		**3RG78 42-6DN21**
1650	Emitter	**3RG78 45-3DN00**	**3RG78 45-3DN10**		**3RG78 42-6DN20**
1800	Receiver	**3RG78 45-3DP01**	**3RG78 45-3DP11**		**3RG78 42-6DP21**
1800	Emitter	**3RG78 45-3DP00**	**3RG78 45-3DP10**		**3RG78 42-6DP20**
Resolution 50 mm					
450	Receiver	**3RG78 45-3EE01**	**3RG78 45-3EE11**		**3RG78 42-6EE21**
450	Emitter	**3RG78 45-3EE00**	**3RG78 45-3EE10**		**3RG78 42-6EE20**
600	Receiver	**3RG78 45-3EF01**	**3RG78 45-3EF11**		**3RG78 42-6EF21**
600	Emitter	**3RG78 45-3EF00**	**3RG78 45-3EF10**		**3RG78 42-6EF20**
750	Receiver	**3RG78 45-3EG01**	**3RG78 45-3EG11**		**3RG78 42-6EG21**
750	Emitter	**3RG78 45-3EG00**	**3RG78 45-3EG10**		**3RG78 42-6EG20**
900	Receiver	**3RG78 45-3EH01**	**3RG78 45-3EH11**		**3RG78 42-6EH21**
900	Emitter	**3RG78 45-3EH00**	**3RG78 45-3EH10**		**3RG78 42-6EH20**

► Preferred type, available from stock.

Initegrated evaluation

Protection field height	Type	Standard device	Host device	Guest device
mm		Order No.	Order No.	Order No.
1050	Receiver	**3RG78 45-3EJ01**	**3RG78 45-3EJ11**	**3RG78 42-6EJ21**
1050	Emitter	**3RG78 45-3EJ00**	**3RG78 45-3EJ10**	**3RG78 42-6EJ20**
1200	Receiver	**3RG78 45-3EK01**	**3RG78 45-3EK11**	**3RG78 42-6EK21**
1200	Emitter	**3RG78 45-3EK00**	**3RG78 45-3EK10**	**3RG78 42-6EK20**
1350	Receiver	**3RG78 45-3EL01**	**3RG78 45-3EL11**	**3RG78 42-6EL21**
1350	Emitter	**3RG78 45-3EL00**	**3RG78 45-3EL10**	**3RG78 42-6EL20**
1500	Receiver	**3RG78 45-3EM01**	**3RG78 45-3EM11**	**3RG78 42-6EM21**
1500	Emitter	**3RG78 45-3EM00**	**3RG78 45-3EM10**	**3RG78 42-6EM20**
1650	Receiver	**3RG78 45-3EN01**	**3RG78 45-3EN11**	**3RG78 42-6EN21**
1650	Emitter	**3RG78 45-3EN00**	**3RG78 45-3EN10**	**3RG78 42-6EN20**
1800	Receiver	**3RG78 45-3EP01**	**3RG78 45-3EP11**	**3RG78 42-6EP21**
1800	Emitter	**3RG78 45-3EP00**	**3RG78 45-3EP10**	**3RG78 42-6EP20**
2100	Receiver	**3RG78 45-3ER01**	**3RG78 45-3ER11**	**3RG78 42-6ER21**
2100	Emitter	**3RG78 45-3ER00**	**3RG78 45-3ER10**	**3RG78 42-6ER20**
2400	Receiver	**3RG78 45-3ES01**	**3RG78 45-3ES11**	**3RG78 42-6ES21**
2400	Emitter	**3RG78 45-3ES00**	**3RG78 45-3ES10**	**3RG78 42-6ES20**
2700	Receiver	**3RG78 45-3ET01**	**3RG78 45-3ET11**	**3RG78 42-6ET21**
2700	Emitter	**3RG78 45-3ET00**	**3RG78 45-3ET10**	**3RG78 42-6ET20**
3000	Receiver	**3RG78 45-3EU01**	**3RG78 45-3EU11**	**3RG78 42-6EU21**
3000	Emitter	**3RG78 45-3EU00**	**3RG78 45-3EU10**	**3RG78 42-6EU20**
Resolution 90 mm				
750	Receiver	**3RG78 45-3JG01**	**3RG78 45-3JG11**	**3RG78 42-6JG21**
750	Emitter	**3RG78 45-3JG00**	**3RG78 45-3JG10**	**3RG78 42-6JG20**
900	Receiver	**3RG78 45-3JH01**	**3RG78 45-3JH11**	**3RG78 42-6JH21**
900	Emitter	**3RG78 45-3JH00**	**3RG78 45-3JH10**	**3RG78 42-6JH20**
1050	Receiver	**3RG78 45-3JJ01**	**3RG78 45-3JJ11**	**3RG78 42-6JJ21**
1050	Emitter	**3RG78 45-3JJ00**	**3RG78 45-3JJ10**	**3RG78 42-6JJ20**
1200	Receiver	**3RG78 45-3JK01**	**3RG78 45-3JK11**	**3RG78 42-6JK21**
1200	Emitter	**3RG78 45-3JK00**	**3RG78 45-3JK10**	**3RG78 42-6JK20**
1350	Receiver	**3RG78 45-3JL01**	**3RG78 45-3JL11**	**3RG78 42-6JL21**
1350	Emitter	**3RG78 45-3JL00**	**3RG78 45-3JL10**	**3RG78 42-6JL20**
1500	Receiver	**3RG78 45-3JM01**	**3RG78 45-3JM11**	**3RG78 42-6JM21**
1500	Emitter	**3RG78 45-3JM00**	**3RG78 45-3JM10**	**3RG78 42-6JM20**
1650	Receiver	**3RG78 45-3JN01**	**3RG78 45-3JN11**	**3RG78 42-6JN21**
1650	Emitter	**3RG78 45-3JN00**	**3RG78 45-3JN10**	**3RG78 42-6JN20**
1800	Receiver	**3RG78 45-3JP01**	**3RG78 45-3JP11**	**3RG78 42-6JP21**
1800	Emitter	**3RG78 45-3JP00**	**3RG78 45-3JP10**	**3RG78 42-6JP20**
2100	Receiver	**3RG78 45-3JR01**	**3RG78 45-3JR11**	**3RG78 42-6JR21**
2100	Emitter	**3RG78 45-3JR00**	**3RG78 45-3JR10**	**3RG78 42-6JR20**
2400	Receiver	**3RG78 45-3JS01**	**3RG78 45-3JS11**	**3RG78 42-6JS21**
2400	Emitter	**3RG78 45-3JS00**	**3RG78 45-3JS10**	**3RG78 42-6JS20**
2700	Receiver	**3RG78 45-3JT01**	**3RG78 45-3JT11**	**3RG78 42-6JT21**
2700	Emitter	**3RG78 45-3JT00**	**3RG78 45-3JT10**	**3RG78 42-6JT20**
3000	Receiver	**3RG78 45-3JU01**	**3RG78 45-3JU11**	**3RG78 42-6JU21**
3000	Emitter	**3RG78 45-3JU00**	**3RG78 45-3JU10**	**3RG78 42-6JU20**

Light grids with standard function package
Transistor output with M12 plug connection [1)]

No. of beams	Beam distance	Type	Standard device
	mm		Order No.
Range 0.8 … 18 mm			
4-beam	300	Receiver	**3RG78 45-3MH01**
4-beam	300	Emitter	**3RG78 45-3MH00**
3-beam	400	Receiver	**3RG78 45-3PG01**
3-beam	400	Emitter	**3RG78 45-3PG00**
2-beam	500	Receiver	**3RG78 45-3SE01**
2-beam	500	Emitter	**3RG78 45-3SE00**
Range 6 … 60 m			
4-beam	300	Receiver	**3RG78 45-3MH51**
4-beam	300	Emitter	**3RG78 45-3MH50**
3-beam	400	Receiver	**3RG78 45-3PG51**
3-beam	400	Emitter	**3RG78 45-3PG50**
2-beam	500	Receiver	**3RG78 45-3SE51**
2-beam	500	Emitter	**3RG78 45-3SE50**

Transceiver with standard function package
Transistor output with M12 plug connection [1)]

No. of beams	Beam distance	Type	Standard device
	mm		Order No.
Range 6.5 m			
2-beam	500	Transceiver	**3RG78 45-3TE01**
Reflecting mirrors for transceivers			**3RG78 48-1TL**

Light curtains with standard function package
Transistor output with Hirschmann connection[1)]

Protective zone height	Type	Standard device	Host device	Guest device
mm		Order No.	Order No.	Order No.
Resolution 14 mm				
150	Receiver	**3RG78 45-2BB01**	**–**	**3RG78 42-6BB21**
150	Emitter	**3RG78 45-2BB00**	**–**	**3RG78 42-6BB20**
225	Receiver	**3RG78 45-2BC01**	**On request**	**3RG78 42-6BC21**
225	Emitter	**3RG78 45-2BC00**	**On request**	**3RG78 42-6BC20**
300	Receiver	**3RG78 45-2BD01**	**On request**	**3RG78 42-6BD21**
300	Emitter	**3RG78 45-2BD00**	**On request**	**3RG78 42-6BD20**
450	Receiver	**3RG78 45-2BE01**	**On request**	**3RG78 42-6BE21**
450	Emitter	**3RG78 45-2BE00**	**On request**	**3RG78 42-6BE20**
600	Receiver	**3RG78 45-2BF01**	**On request**	**3RG78 42-6BF21**
600	Emitter	**3RG78 45-2BF00**	**On request**	**3RG78 42-6BF20**
750	Receiver	**3RG78 45-2BG01**	**On request**	**3RG78 42-6BG21**
750	Emitter	**3RG78 45-2BG00**	**On request**	**3RG78 42-6BG20**
900	Receiver	**3RG78 45-2BH01**	**On request**	**3RG78 42-6BH21**
900	Emitter	**3RG78 45-2BH00**	**On request**	**3RG78 42-6BH20**
1050	Receiver	**3RG78 45-2BJ01**	**On request**	**3RG78 42-6BJ21**
1050	Emitter	**3RG78 45-2BJ00**	**On request**	**3RG78 42-6BJ20**

1) For scope of supply see top of page 4/36

Initegrated evaluation

Protective zone height	Type	Standard device	Host device		Guest device
mm		Order No.	Order No.		Order No.
1200	Receiver	**3RG78 45-2BK01**	**On request**		**3RG78 42-6BK21**
1200	Emitter	**3RG78 45-2BK00**	**On request**		**3RG78 42-6BK20**
1350	Receiver	**3RG78 45-2BL01**	**On request**		**3RG78 42-6BL21**
1350	Emitter	**3RG78 45-2BL00**	**On request**		**3RG78 42-6BL20**
1500	Receiver	**3RG78 45-2BM01**	**On request**		**3RG78 42-6BM21**
1500	Emitter	**3RG78 45-2BM00**	**On request**		**3RG78 42-6BM20**
1650	Receiver	**3RG78 45-2BN01**	**On request**		**3RG78 42-6BN21**
1650	Emitter	**3RG78 45-2BN00**	**On request**		**3RG78 42-6BN20**
1800	Receiver	**3RG78 45-2BP01**	**On request**		**3RG78 42-6BP21**
1800	Emitter	**3RG78 45-2BP00**	**On request**		**3RG78 42-6BP20**
Resolution 30 mm					
150	Receiver	**3RG78 45-2DB01**	**–**		**3RG78 42-6DB21**
150	Emitter	**3RG78 45-2DB00**	**–**		**3RG78 42-6DB20**
225	Receiver	**3RG78 45-2DC01**	**On request**		**3RG78 42-6DC21**
225	Emitter	**3RG78 45-2DC00**	**On request**		**3RG78 42-6DC20**
300	Receiver	**3RG78 45-2DD01**	**On request**		**3RG78 42-6DD21**
300	Emitter	**3RG78 45-2DD00**	**On request**		**3RG78 42-6DD20**
450	Receiver	**3RG78 45-2DE01**	**On request**	►	**3RG78 42-6DE21**
450	Emitter	**3RG78 45-2DE00**	**On request**	►	**3RG78 42-6DE20**
600	Receiver	**3RG78 45-2DF01**	**On request**		**3RG78 42-6DF21**
600	Emitter	**3RG78 45-2DF00**	**On request**		**3RG78 42-6DF20**
750	Receiver	**3RG78 45-2DG01**	**On request**		**3RG78 42-6DG21**
750	Emitter	**3RG78 45-2DG00**	**On request**		**3RG78 42-6DG20**
900	Receiver	**3RG78 45-2DH01**	**On request**		**3RG78 42-6DH21**
900	Emitter	**3RG78 45-2DH00**	**On request**		**3RG78 42-6DH20**
1050	Receiver	**3RG78 45-2DJ01**	**On request**		**3RG78 42-6DJ21**
1050	Emitter	**3RG78 45-2DJ00**	**On request**		**3RG78 42-6DJ20**
1200	Receiver	**3RG78 45-2DK01**	**On request**		**3RG78 42-6DK21**
1200	Emitter	**3RG78 45-2DK00**	**On request**		**3RG78 42-6DK20**
1350	Receiver	**3RG78 45-2DL01**	**On request**		**3RG78 42-6DL21**
1350	Emitter	**3RG78 45-2DL00**	**On request**		**3RG78 42-6DL20**
1500	Receiver	**3RG78 45-2DM01**	**On request**		**3RG78 42-6DM21**
1500	Emitter	**3RG78 45-2DM00**	**On request**		**3RG78 42-6DM20**
1650	Receiver	**3RG78 45-2DN01**	**On request**		**On request**
1650	Emitter	**3RG78 45-2DN00**	**On request**		**On request**
1800	Receiver	**3RG78 45-2DP01**	**On request**		**On request**
1800	Emitter	**3RG78 45-2DP00**	**On request**		**On request**

► Preferred type, available from stock.

Light grids with standard function package
Transistor output with Hirschmann connection[1)]

No. of beams	Beam distance	Type	Standard device
	mm		Order No.
Range 0.8 … 18 m			
4-beam	300	Receiver	**3RG78 45-2MH01**
4-beam	300	Emitter	**3RG78 45-2MH00**
3-beam	400	Receiver	**3RG78 45-2PG01**
3-beam	400	Emitter	**3RG78 45-2PG00**
2-beam	500	Receiver	**3RG78 45-2SE01**
2-beam	500	Emitter	**3RG78 45-2SE00**
Range 6 … 60 m			
4-beam	300	Receiver	**3RG78 45-2MH51**
4-beam	300	Emitter	**3RG78 45-2MH50**
3-beam	400	Receiver	**3RG78 45-2PG51**
3-beam	400	Emitter	**3RG78 45-2PG50**
2-beam	500	Receiver	**3RG78 45-2SE51**
2-beam	500	Emitter	**3RG78 45-2SE50**

Transceiver with standard function package
Transistor output with Hirschmann connection[1)]

No. of beams	Beam distance	Type	Standard device
	mm		Order No.
Range 6.5 m			
2-beam	500	Transceiver	**3RG78 45-2TE01**
Reflecting mirrors for transceivers			**3RG78 48-1TL**

Light curtains with standard function package
Transistor output with Brad Harrison connection (MIN Series)[1)2)]

Protection field height	Type	Standard device	Host device	Guest device
mm		Order No.	Order No.	Order No.
Resolution 14 mm				
150	Receiver	**3RG78 45-4BB01**	**–**	**3RG78 42-6BB21**
150	Emitter	**3RG78 45-4BB00**	**–**	**3RG78 42-6BB20**
225	Receiver	**3RG78 45-4BC01**	**3RG78 45-4BC11**	**3RG78 42-6BC21**
225	Emitter	**3RG78 45-4BC00**	**3RG78 45-4BC10**	**3RG78 42-6BC20**
300	Receiver	**3RG78 45-4BD01**	**3RG78 45-4BD11**	**3RG78 42-6BD21**
300	Emitter	**3RG78 45-4BD00**	**3RG78 45-4BD10**	**3RG78 42-6BD20**
450	Receiver	**3RG78 45-4BE01**	**3RG78 45-4BE11**	**3RG78 42-6BE21**
450	Emitter	**3RG78 45-4BE00**	**3RG78 45-4BE10**	**3RG78 42-6BE20**
600	Receiver	**3RG78 45-4BF01**	**3RG78 45-4BF11**	**3RG78 42-6BF21**
600	Emitter	**3RG78 45-4BF00**	**3RG78 45-4BF10**	**3RG78 42-6BF20**
750	Receiver	**3RG78 45-4BG01**	**3RG78 45-4BG11**	**3RG78 42-6BG21**
750	Emitter	**3RG78 45-4BG00**	**3RG78 45-4BG10**	**3RG78 42-6BG20**
900	Receiver	**3RG78 45-4BH01**	**3RG78 45-4BH11**	**3RG78 42-6BH21**
900	Emitter	**3RG78 45-4BH00**	**3RG78 45-4BH10**	**3RG78 42-6BH20**
1050	Receiver	**3RG78 45-4BJ01**	**3RG78 45-4BJ11**	**3RG78 42-6BJ21**
1050	Emitter	**3RG78 45-4BJ00**	**3RG78 45-4BJ10**	**3RG78 42-6BJ20**
1200	Receiver	**3RG78 45-4BK01**	**3RG78 45-4BK11**	**3RG78 42-6BK21**
1200	Emitter	**3RG78 45-4BK00**	**3RG78 45-4BK10**	**3RG78 42-6BK20**

1) For scope of supply see top of page 4/36
2) Required above all for applications on the NAFTA market

Initegrated evaluation

Protec-tion field height	Type	Standard device	Host device	Guest device
mm		Order No.	Order No.	Order No.
1350	Receiver	**3RG78 45-4BL01**	**3RG78 45-4BL11**	**3RG78 42-6BL21**
1350	Emitter	**3RG78 45-4BL00**	**3RG78 45-4BL10**	**3RG78 42-6BL20**
1500	Receiver	**3RG78 45-4BM01**	**3RG78 45-4BM11**	**3RG78 42-6BM21**
1500	Emitter	**3RG78 45-4BM00**	**3RG78 45-4BM10**	**3RG78 42-6BM20**
1650	Receiver	**3RG78 45-4BN01**	**3RG78 45-4BN11**	**3RG78 42-6BN21**
1650	Emitter	**3RG78 45-4BN00**	**3RG78 45-4BN10**	**3RG78 42-6BN20**
1800	Receiver	**3RG78 45-4BP01**	**3RG78 45-4BP11**	**3RG78 42-6BP21**
1800	Emitter	**3RG78 45-4BP00**	**3RG78 45-4BP10**	**3RG78 42-6BP20**
Resolution 30 mm				
150	Receiver	**3RG78 45-4DB01**	**–**	**3RG78 42-6DB21**
150	Emitter	**3RG78 45-4DB00**	**–**	**3RG78 42-6DB20**
225	Receiver	**3RG78 45-4DC01**	**3RG78 45-4DC11**	**3RG78 42-6DC21**
225	Emitter	**3RG78 45-4DC00**	**3RG78 45-4DC10**	**3RG78 42-6DC20**
300	Receiver	**3RG78 45-4DD01**	**3RG78 45-4DD11**	**3RG78 42-6DD21**
300	Emitter	**3RG78 45-4DD00**	**3RG78 45-4DD10**	**3RG78 42-6DD20**
450	Receiver	**3RG78 45-4DE01**	**3RG78 45-4DE11** ►	**3RG78 42-6DE21**
450	Emitter	**3RG78 45-4DE00**	**3RG78 45-4DE10** ►	**3RG78 42-6DE20**
600	Receiver ►	**3RG78 45-4DF01**	**3RG78 45-4DF11**	**3RG78 42-6DF21**
600	Emitter ►	**3RG78 45-4DF00**	**3RG78 45-4DF10**	**3RG78 42-6DF20**
750	Receiver ►	**3RG78 45-4DG01**	**3RG78 45-4DG11**	**3RG78 42-6DG21**
750	Emitter ►	**3RG78 45-4DG00**	**3RG78 45-4DG10**	**3RG78 42-6DG20**
900	Receiver ►	**3RG78 45-4DH01**	► **3RG78 45-4DH11**	**3RG78 42-6DH21**
900	Emitter ►	**3RG78 45-4DH00**	► **3RG78 45-4DH10**	**3RG78 42-6DH20**
1050	Receiver	**3RG78 45-4DJ01**	**3RG78 45-4DJ11**	**3RG78 42-6DJ21**
1050	Emitter	**3RG78 45-4DJ00**	**3RG78 45-4DJ10**	**3RG78 42-6DJ20**
1200	Receiver	**3RG78 45-4DK01**	**3RG78 45-4DK11**	**3RG78 42-6DK21**
1200	Emitter	**3RG78 45-4DK00**	**3RG78 45-4DK10**	**3RG78 42-6DK20**
1350	Receiver	**3RG78 45-4DL01**	**3RG78 45-4DL11**	**3RG78 42-6DL21**
1350	Emitter	**3RG78 45-4DL00**	**3RG78 45-4DL10**	**3RG78 42-6DL20**
1500	Receiver	**3RG78 45-4DM01**	**3RG78 45-4DM11**	**3RG78 42-6DM21**
1500	Emitter	**3RG78 45-4DM00**	**3RG78 45-4DM10**	**3RG78 42-6DM20**
1650	Receiver	**3RG78 45-4DN01**	**3RG78 45-4DN11**	**3RG78 42-6DN21**
1650	Emitter	**3RG78 45-4DN00**	**3RG78 45-4DN10**	**3RG78 42-6DN20**
1800	Receiver	**3RG78 45-4DP01**	**3RG78 45-4DP11**	**3RG78 42-6DP21**
1800	Emitter	**3RG78 45-4DP00**	**3RG78 45-4DP10**	**3RG78 42-6DP20**
Resolution 50 mm				
450	Receiver	**3RG78 45-4EE01**	**3RG78 45-4EE11**	**3RG78 42-6EE21**
450	Emitter	**3RG78 45-4EE00**	**3RG78 45-4EE10**	**3RG78 42-6EE20**
600	Receiver	**3RG78 45-4EF01**	**3RG78 45-4EF11**	**3RG78 42-6EF21**
600	Emitter	**3RG78 45-4EF00**	**3RG78 45-4EF10**	**3RG78 42-6EF20**
750	Receiver	**3RG78 45-4EG01**	**3RG78 45-4EG11**	**3RG78 42-6EG21**
750	Emitter	**3RG78 45-4EG00**	**3RG78 45-4EG10**	**3RG78 42-6EG20**
900	Receiver	**3RG78 45-4EH01**	**3RG78 45-4EH11**	**3RG78 42-6EH21**
900	Emitter	**3RG78 45-4EH00**	**3RG78 45-4EH10**	**3RG78 42-6EH20**
1050	Receiver	**3RG78 45-4EJ01**	**3RG78 45-4EJ11**	**3RG78 42-6EJ21**
1050	Emitter	**3RG78 45-4EJ00**	**3RG78 45-4EJ10**	**3RG78 42-6EJ20**
1200	Receiver	**3RG78 45-4EK01**	**3RG78 45-4EK11**	**3RG78 42-6EK21**
1200	Emitter	**3RG78 45-4EK00**	**3RG78 45-4EK10**	**3RG78 42-6EK20**

► Preferred type, available from stock.

Protection field height	Type	Standard device	Host device	Guest device
mm		Order No.	Order No.	Order No.
1350	Receiver	**3RG78 45-4EL01**	**3RG78 45-4EL11**	**3RG78 42-6EL21**
1350	Emitter	**3RG78 45-4EL00**	**3RG78 45-4EL10**	**3RG78 42-6EL20**
1500	Receiver	**3RG78 45-4EM01**	**3RG78 45-4EM11**	**3RG78 42-6EM21**
1500	Emitter	**3RG78 45-4EM00**	**3RG78 45-4EM10**	**3RG78 42-6EM20**
1650	Receiver	**3RG78 45-4EN01**	**3RG78 45-4EN11**	**3RG78 42-6EN21**
1650	Emitter	**3RG78 45-4EN00**	**3RG78 45-4EN10**	**3RG78 42-6EN20**
1800	Receiver	**3RG78 45-4EP01**	**3RG78 45-4EP11**	**3RG78 42-6EP21**
1800	Emitter	**3RG78 45-4EP00**	**3RG78 45-4EP10**	**3RG78 42-6EP20**
2100	Receiver	**3RG78 45-4ER01**	**3RG78 45-4ER11**	**3RG78 42-6ER21**
2100	Emitter	**3RG78 45-4ER00**	**3RG78 45-4ER10**	**3RG78 42-6ER20**
2400	Receiver	**3RG78 45-4ES01**	**3RG78 45-4ES11**	**3RG78 42-6ES21**
2400	Emitter	**3RG78 45-4ES00**	**3RG78 45-4ES10**	**3RG78 42-6ES20**
2700	Receiver	**3RG78 45-4ET01**	**3RG78 45-4ET11**	**3RG78 42-6ET21**
2700	Emitter	**3RG78 45-4ET00**	**3RG78 45-4ET10**	**3RG78 42-6ET20**
3000	Receiver	**3RG78 45-4EU01**	**3RG78 45-4EU11**	**3RG78 42-6EU21**
3000	Emitter	**3RG78 45-4EU00**	**3RG78 45-4EU10**	**3RG78 42-6EU20**
Resolution 90 mm				
750	Receiver	**3RG78 45-4JG01**	**3RG78 45-4JG11**	**3RG78 42-6JG21**
750	Emitter	**3RG78 45-4JG00**	**3RG78 45-4JG10**	**3RG78 42-6JG20**
900	Receiver	**3RG78 45-4JH01**	**3RG78 45-4JH11**	**3RG78 42-6JH21**
900	Emitter	**3RG78 45-4JH00**	**3RG78 45-4JH10**	**3RG78 42-6JH20**
1050	Receiver	**3RG78 45-4JJ01**	**3RG78 45-4JJ11**	**3RG78 42-6JJ21**
1050	Emitter	**3RG78 45-4JJ00**	**3RG78 45-4JJ10**	**3RG78 42-6JJ20**
1200	Receiver	**3RG78 45-4JK01**	**3RG78 45-4JK11**	**3RG78 42-6JK21**
1200	Emitter	**3RG78 45-4JK00**	**3RG78 45-4JK10**	**3RG78 42-6JK20**
1350	Receiver	**3RG78 45-4JL01**	**3RG78 45-4JL11**	**3RG78 42-6JL21**
1350	Emitter	**3RG78 45-4JL00**	**3RG78 45-4JL10**	**3RG78 42-6JL20**
1500	Receiver	**3RG78 45-4JM01**	**3RG78 45-4JM11**	**3RG78 42-6JM21**
1500	Emitter	**3RG78 45-4JM00**	**3RG78 45-4JM10**	**3RG78 42-6JM20**
1650	Receiver	**3RG78 45-4JN01**	**3RG78 45-4JN11**	**3RG78 42-6JN21**
1650	Emitter	**3RG78 45-4JN00**	**3RG78 45-4JN10**	**3RG78 42-6JN20**
1800	Receiver	**3RG78 45-4JP01**	**3RG78 45-4JP11**	**3RG78 42-6JP21**
1800	Emitter	**3RG78 45-4JP00**	**3RG78 45-4JP10**	**3RG78 42-6JP20**
2100	Receiver	**3RG78 45-4JR01**	**3RG78 45-4JR11**	**3RG78 42-6JR21**
2100	Emitter	**3RG78 45-4JR00**	**3RG78 45-4JR10**	**3RG78 42-6JR20**
2400	Receiver	**3RG78 45-4JS01**	**3RG78 45-4JS11**	**3RG78 42-6JS21**
2400	Emitter	**3RG78 45-4JS00**	**3RG78 45-4JS10**	**3RG78 42-6JS20**
2700	Receiver	**3RG78 45-4JT01**	**3RG78 45-4JT11**	**3RG78 42-6JT21**
2700	Emitter	**3RG78 45-4JT00**	**3RG78 45-4JT10**	**3RG78 42-6JT20**
3000	Receiver	**3RG78 45-4JU01**	**3RG78 45-4JU11**	**3RG78 42-6JU21**
3000	Emitter	**3RG78 45-4JU00**	**3RG78 45-4JU10**	**3RG78 42-6JU20**

Initegrated evaluation

Light grids with standard function package
Transistor output with Brad Harrison connection (MIN Series)[1)2)]

No. of beams	Beam distance mm	Type	Standard device Order No.
Range 0.8 … 18 m			
4-beam	300	Receiver	**3RG78 45-4MH01**
4-beam	300	Emitter	**3RG78 45-4MH00**
3-beam	400	Receiver	**3RG78 45-4PG01**
3-beam	400	Emitter	**3RG78 45-4PG00**
2-beam	500	Receiver	**3RG78 45-4SE01**
2-beam	500	Emitter	**3RG78 45-4SE00**
Range 6 … 60 m			
4-beam	300	Receiver	**3RG78 45-4MH51**
4-beam	300	Emitter	**3RG78 45-4MH50**
3-beam	400	Receiver	**3RG78 45-4PG51**
3-beam	400	Emitter	**3RG78 45-4PG50**
2-beam	500	Receiver	**3RG78 45-4SE51**
2-beam	500	Emitter	**3RG78 45-4SE50**

Transceiver with standard function package
Transistor output with Brad Harrison connection (MIN Series)[1)2)]

No. of beams	Beam distance mm	Type	Standard device Order No.
Range 6.5 m			
2-beam	500	Transceiver	**3RG78 45-4TE01**
Reflecting mirrors for transceivers			**3RG78 48-1TL**

4

1) For scope of supply see top of page 4/36
2) Required above all for applications on the NAFTA market

Light curtains with standard function package
Transistor output with cable gland[1)]

Protection field height	Type		Standard device		Host device		Guest device
mm			Order No.		Order No.		Order No.
Resolution 14 mm							
150	Receiver		**3RG78 45-6BB01**		**–**		**3RG78 42-6BB21**
150	Emitter		**3RG78 45-6BB00**		**–**		**3RG78 42-6BB20**
225	Receiver		**3RG78 45-6BC01**		**3RG78 45-6BC11**		**3RG78 42-6BC21**
225	Emitter		**3RG78 45-6BC00**		**3RG78 45-6BC10**		**3RG78 42-6BC20**
300	Receiver		**3RG78 45-6BD01**		**3RG78 45-6BD11**		**3RG78 42-6BD21**
300	Emitter		**3RG78 45-6BD00**		**3RG78 45-6BD10**		**3RG78 42-6BD20**
450	Receiver	►	**3RG78 45-6BE01**		**3RG78 45-6BE11**		**3RG78 42-6BE21**
450	Emitter	►	**3RG78 45-6BE00**		**3RG78 45-6BE10**		**3RG78 42-6BE20**
600	Receiver	►	**3RG78 45-6BF01**		**3RG78 45-6BF11**		**3RG78 42-6BF21**
600	Emitter	►	**3RG78 45-6BF00**		**3RG78 45-6BF10**		**3RG78 42-6BF20**
750	Receiver	►	**3RG78 45-6BG01**		**3RG78 45-6BG11**		**3RG78 42-6BG21**
750	Emitter	►	**3RG78 45-6BG00**		**3RG78 45-6BG10**		**3RG78 42-6BG20**
900	Receiver	►	**3RG78 45-6BH01**		**3RG78 45-6BH11**		**3RG78 42-6BH21**
900	Emitter	►	**3RG78 45-6BH00**		**3RG78 45-6BH10**		**3RG78 42-6BH20**
1050	Receiver		**3RG78 45-6BJ01**		**3RG78 45-6BJ11**		**3RG78 42-6BJ21**
1050	Emitter		**3RG78 45-6BJ00**		**3RG78 45-6BJ10**		**3RG78 42-6BJ20**
1200	Receiver		**3RG78 45-6BK01**		**3RG78 45-6BK11**		**3RG78 42-6BK21**
1200	Emitter		**3RG78 45-6BK00**		**3RG78 45-6BK10**		**3RG78 42-6BK20**
1350	Receiver		**3RG78 45-6BL01**		**3RG78 45-6BL11**		**3RG78 42-6BL21**
1350	Emitter		**3RG78 45-6BL00**		**3RG78 45-6BL10**		**3RG78 42-6BL20**
1500	Receiver		**3RG78 45-6BM01**		**3RG78 45-6BM11**		**3RG78 42-6BM21**
1500	Emitter		**3RG78 45-6BM00**		**3RG78 45-6BM10**		**3RG78 42-6BM20**
1650	Receiver		**3RG78 45-6BN01**		**3RG78 45-6BN11**		**3RG78 42-6BN21**
1650	Emitter		**3RG78 45-6BN00**		**3RG78 45-6BN10**		**3RG78 42-6BN20**
1800	Receiver		**3RG78 45-6BP01**		**3RG78 45-6BP11**		**3RG78 42-6BP21**
1800	Emitter		**3RG78 45-6BP00**		**3RG78 45-6BP10**		**3RG78 42-6BP20**
Resolution 30 mm							
150	Receiver		**3RG78 45-6DB01**		**–**		**3RG78 42-6DB21**
150	Emitter		**3RG78 45-6DB00**		**–**		**3RG78 42-6DB20**
225	Receiver		**3RG78 45-6DC01**		**3RG78 45-6DC11**		**3RG78 42-6DC21**
225	Emitter		**3RG78 45-6DC00**		**3RG78 45-6DC10**		**3RG78 42-6DC20**
300	Receiver	►	**3RG78 45-6DD01**		**3RG78 45-6DD11**		**3RG78 42-6DD21**
300	Emitter	►	**3RG78 45-6DD00**		**3RG78 45-6DD10**		**3RG78 42-6DD20**
450	Receiver	►	**3RG78 45-6DE01**		**3RG78 45-6DE11**	►	**3RG78 42-6DE21**
450	Emitter	►	**3RG78 45-6DE00**		**3RG78 45-6DE10**	►	**3RG78 42-6DE20**
600	Receiver	►	**3RG78 45-6DF01**		**3RG78 45-6DF11**		**3RG78 42-6DF21**
600	Emitter	►	**3RG78 45-6DF00**		**3RG78 45-6DF10**		**3RG78 42-6DF20**
750	Receiver	►	**3RG78 45-6DG01**		**3RG78 45-6DG11**		**3RG78 42-6DG21**
750	Emitter	►	**3RG78 45-6DG00**		**3RG78 45-6DG10**		**3RG78 42-6DG20**
900	Receiver	►	**3RG78 45-6DH01**		**3RG78 45-6DH11**		**3RG78 42-6DH21**
900	Emitter	►	**3RG78 45-6DH00**		**3RG78 45-6DH10**		**3RG78 42-6DH20**
1050	Receiver		**3RG78 45-6DJ01**		**3RG78 45-6DJ11**		**3RG78 42-6DJ21**
1050	Emitter		**3RG78 45-6DJ00**		**3RG78 45-6DJ10**		**3RG78 42-6DJ20**
1200	Receiver		**3RG78 45-6DK01**		**3RG78 45-6DK11**		**3RG78 42-6DK21**
1200	Emitter		**3RG78 45-6DK00**		**3RG78 45-6DK10**		**3RG78 42-6DK20**

1) For scope of supply see top of page 4/36
► Preferred type, available from stock.

Initegrated evaluation

Protection field height	Type	Standard device	Host device	Guest device
mm		Order No.	Order No.	Order No.
1350	Receiver	**3RG78 45-6DL01**	**3RG78 45-6DL11**	**3RG78 42-6DL21**
1350	Emitter	**3RG78 45-6DL00**	**3RG78 45-6DL10**	**3RG78 42-6DL20**
1500	Receiver	**3RG78 45-6DM01**	**3RG78 45-6DM11**	**3RG78 42-6DM21**
1500	Emitter	**3RG78 45-6DM00**	**3RG78 45-6DM10**	**3RG78 42-6DM20**
1650	Receiver	**3RG78 45-6DN01**	**3RG78 45-6DN11**	**3RG78 42-6DN21**
1650	Emitter	**3RG78 45-6DN00**	**3RG78 45-6DN10**	**3RG78 42-6DN20**
1800	Receiver	**3RG78 45-6DP01**	**3RG78 45-6DP11**	**3RG78 42-6DP21**
1800	Emitter	**3RG78 45-6DP00**	**3RG78 45-6DP10**	**3RG78 42-6DP20**
Resolution 50 mm				
450	Receiver ►	**3RG78 45-6EE01**	**3RG78 45-6EE11**	**3RG78 42-6EE21**
450	Emitter ►	**3RG78 45-6EE00**	**3RG78 45-6EE10**	**3RG78 42-6EE20**
600	Receiver	**3RG78 45-6EF01**	**3RG78 45-6EF11**	**3RG78 42-6EF21**
600	Emitter	**3RG78 45-6EF00**	**3RG78 45-6EF10**	**3RG78 42-6EF20**
750	Receiver	**3RG78 45-6EG01**	**3RG78 45-6EG11**	**3RG78 42-6EG21**
750	Emitter	**3RG78 45-6EG00**	**3RG78 45-6EG10**	**3RG78 42-6EG20**
900	Receiver	**3RG78 45-6EH01**	**3RG78 45-6EH11**	**3RG78 42-6EH21**
900	Emitter	**3RG78 45-6EH00**	**3RG78 45-6EH10**	**3RG78 42-6EH20**
1050	Receiver	**3RG78 45-6EJ01**	**3RG78 45-6EJ11**	**3RG78 42-6EJ21**
1050	Emitter	**3RG78 45-6EJ00**	**3RG78 45-6EJ10**	**3RG78 42-6EJ20**
1200	Receiver	**3RG78 45-6EK01**	**3RG78 45-6EK11**	**3RG78 42-6EK21**
1200	Emitter	**3RG78 45-6EK00**	**3RG78 45-6EK10**	**3RG78 42-6EK20**
1350	Receiver	**3RG78 45-6EL01**	**3RG78 45-6EL11**	**3RG78 42-6EL21**
1350	Emitter	**3RG78 45-6EL00**	**3RG78 45-6EL10**	**3RG78 42-6EL20**
1500	Receiver	**3RG78 45-6EM01**	**3RG78 45-6EM11**	**3RG78 42-6EM21**
1500	Emitter	**3RG78 45-6EM00**	**3RG78 45-6EM10**	**3RG78 42-6EM20**
1650	Receiver	**3RG78 45-6EN01**	**3RG78 45-6EN11**	**3RG78 42-6EN21**
1650	Emitter	**3RG78 45-6EN00**	**3RG78 45-6EN10**	**3RG78 42-6EN20**
1800	Receiver	**3RG78 45-6EP01**	**3RG78 45-6EP11**	**3RG78 42-6EP21**
1800	Emitter	**3RG78 45-6EP00**	**3RG78 45-6EP10**	**3RG78 42-6EP20**
2100	Receiver	**3RG78 45-6ER01**	**3RG78 45-6ER11**	**3RG78 42-6ER21**
2100	Emitter	**3RG78 45-6ER00**	**3RG78 45-6ER10**	**3RG78 42-6ER20**
2400	Receiver	**3RG78 45-6ES01**	**3RG78 45-6ES11**	**3RG78 42-6ES21**
2400	Emitter	**3RG78 45-6ES00**	**3RG78 45-6ES10**	**3RG78 42-6ES20**
2700	Receiver	**3RG78 45-6ET01**	**3RG78 45-6ET11**	**3RG78 42-6ET21**
2700	Emitter	**3RG78 45-6ET00**	**3RG78 45-6ET10**	**3RG78 42-6ET20**
3000	Receiver	**3RG78 45-6EU01**	**3RG78 45-6EU11**	**3RG78 42-6EU21**
3000	Emitter	**3RG78 45-6EU00**	**3RG78 45-6EU10**	**3RG78 42-6EU20**
Resolution 90 mm				
750	Receiver	**3RG78 45-6JG01**	**3RG78 45-6JG11**	**3RG78 42-6JG21**
750	Emitter	**3RG78 45-6JG00**	**3RG78 45-6JG10**	**3RG78 42-6JG20**
900	Receiver ►	**3RG78 45-6JH01**	**3RG78 45-6JH11**	**3RG78 42-6JH21**
900	Emitter ►	**3RG78 45-6JH00**	**3RG78 45-6JH10**	**3RG78 42-6JH20**
1050	Receiver	**3RG78 45-6JJ01**	**3RG78 45-6JJ11**	**3RG78 42-6JJ21**
1050	Emitter	**3RG78 45-6JJ00**	**3RG78 45-6JJ10**	**3RG78 42-6JJ20**
1200	Receiver	**3RG78 45-6JK01**	**3RG78 45-6JK11**	**3RG78 42-6JK21**
1200	Emitter	**3RG78 45-6JK00**	**3RG78 45-6JK10**	**3RG78 42-6JK20**
1350	Receiver	**3RG78 45-6JL01**	**3RG78 45-6JL11**	**3RG78 42-6JL21**
1350	Emitter	**3RG78 45-6JL00**	**3RG78 45-6JL10**	**3RG78 42-6JL20**
1500	Receiver	**3RG78 45-6JM01**	**3RG78 45-6JM11**	**3RG78 42-6JM21**
1500	Emitter	**3RG78 45-6JM00**	**3RG78 45-6JM10**	**3RG78 42-6JM20**

► Preferred type, available from stock.

Protection field height	Type	Standard device	Host device	Guest device
mm		Order No.	Order No.	Order No.
1650	Receiver	**3RG78 45-6JN01**	**3RG78 45-6JN11**	**3RG78 42-6JN21**
1650	Emitter	**3RG78 45-6JN00**	**3RG78 45-6JN10**	**3RG78 42-6JN20**
1800	Receiver	**3RG78 45-6JP01**	**3RG78 45-6JP11**	**3RG78 42-6JP21**
1800	Emitter	**3RG78 45-6JP00**	**3RG78 45-6JP10**	**3RG78 42-6JP20**
2100	Receiver	**3RG78 45-6JR01**	**3RG78 45-6JR11**	**3RG78 42-6JR21**
2100	Emitter	**3RG78 45-6JR00**	**3RG78 45-6JR10**	**3RG78 42-6JR20**
2400	Receiver	**3RG78 45-6JS01**	**3RG78 45-6JS11**	**3RG78 42-6JS21**
2400	Emitter	**3RG78 45-6JS00**	**3RG78 45-6JS10**	**3RG78 42-6JS20**
2700	Receiver	**3RG78 45-6JT01**	**3RG78 45-6JT11**	**3RG78 42-6JT21**
2700	Emitter	**3RG78 45-6JT00**	**3RG78 45-6JT10**	**3RG78 42-6JT20**
3000	Receiver	**3RG78 45-6JU01**	**3RG78 45-6JU11**	**3RG78 42-6JU21**
3000	Emitter	**3RG78 45-6JU00**	**3RG78 45-6JU10**	**3RG78 42-6JU20**

Light grids with standard function package
Transistor output with cable gland[1)]

No. of beams	Beam distance	Type		Standard device
	mm			Order No.
Range 0.8 … 18 m				
4-beam	300	Receiver	►	**3RG78 45-6MH01**
4-beam	300	Emitter	►	**3RG78 45-6MH00**
3-beam	400	Receiver	►	**3RG78 45-6PG01**
3-beam	400	Emitter	►	**3RG78 45-6PG00**
2-beam	500	Receiver	►	**3RG78 45-6SE01**
2-beam	500	Emitter	►	**3RG78 45-6SE00**
Range 6 … 60 m				
4-beam	300	Receiver	►	**3RG78 45-6MH51**
4-beam	300	Emitter	►	**3RG78 45-6MH50**
3-beam	400	Receiver	►	**3RG78 45-6PG51**
3-beam	400	Emitter	►	**3RG78 45-6PG50**
2-beam	500	Receiver	►	**3RG78 45-6SE51**
2-beam	500	Emitter	►	**3RG78 45-6SE50**

Transceiver with standard function package
Transistor output with cable gland[1)]

No. of beams	Beam distance	Type	Standard device
	mm		Order No.
Range 6.5 m			
2-beam	500	Transceiver	**3RG78 45-6TE01**
Reflecting mirrors for transceivers			**3RG78 48-1TL**

1) For scope of supply see top of page 4/36.
► Preferred type, available from stock.

Dimensions

3RG78 45 standard light curtains, 3RG78 45 light grids

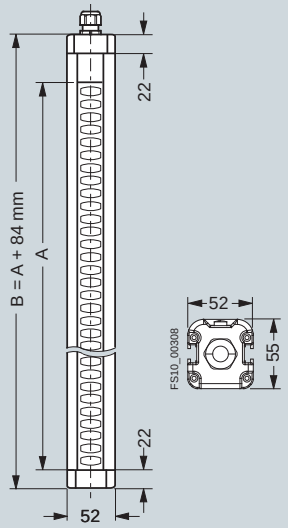

① Pg 9 cover (receiver only, for local interface)

A Protection field height (see Selection and Ordering data)

B Overall length = Protection field height A + 134 mm

3RG78 45 light grids, additional dimensions

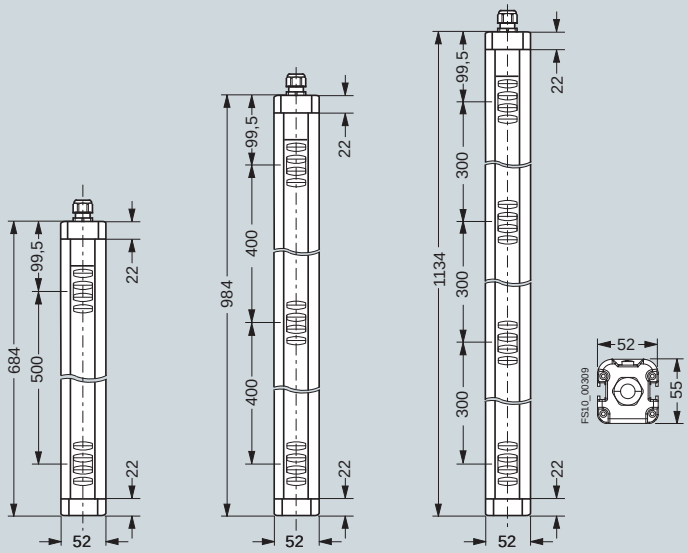

Additional dimensions (mm) for light grids only:

Type	Overall length	Beam distance	Beams
3RG78 45-..M	1134	300	4
3RG78 45-..P	984	400	3
3RG78 45-..S	684	500	2

Overview

3SF78 44 light curtains and light grids for ASIsafe with integrated evaluation for type 4 in accordance with IEC/EN 61496-1, -2

- With function packages "Blanking", "Muting", and "Cycle Control"
- Resolutions: 14, 30, and 50 mm
- Protection field height: 150 mm to 3000 mm
- 2-beam, 3-beam or 4-beam light grids
- Cascading of host and guest devices for greater protection field heights or lengths or for an angular arrangement (optional).

Two standard 3RG78 48-0AB mounting brackets each are enclosed with all devices (can also be ordered as accessories see page 4/92).

3SF78 44 (ASIsafe) program overview

Unit type	Function package	Output	Connection type	For light curtains: Resolution / For light grids and transceivers: Range		LED indicator light	See page
				14 mm	30 mm		
Light curtains	Blanking	ASIsafe	ASIsafe	✔	✔	–	4/52
Light curtains	Muting	ASIsafe	ASIsafe	–	✔	–	4/53
Light curtains	Muting	ASIsafe	ASIsafe	–	✔	with	4/53
Light grids	Muting	ASIsafe	ASIsafe	0.8 ... 18 m; 6 ... 70 m		–	4/54
Light grids	Muting	ASIsafe	ASIsafe	0.8 ... 18 m		with	4/54
Transceivers	Muting	ASIsafe	ASIsafe	6.5 m		with and without	4/54
Light curtains	Sequence control system	ASIsafe	ASIsafe	✔	✔	–	4/55

Accessories

Electrical connection	
• Connecting cable with M12 connector, also applicable for supplying power to the ASIsafe emitter	4/95
• ASIsafe modules	4/94
Accessory cable	
• for the local connection to connect muting lights, key-operated switches, reset buttons, etc.	4/94
Assembly materials	
• Fixing columns, reflecting mirror	4/91
• Muting mounting systems	4/92
• Muting accessories	4/95
Laser alignment assistance, diagnostic software	4/93

Other ASIsafe light curtains and light grids for external evaluation see pages 4/64 and 4/67.

Technical specifications

Type	3SF78 44
Safety category	
• to EN, IEC 61496-1, -2	Type 4
• according to IEC 61508	SIL 3
Protection field height	
• for 14 and 30 mm resolution	150 ... 1800 mm
• for 50 mm resolution	450 ... 3000 mm
Protection field width, range	
• for 14 mm resolution	0 ... 6 m
• for 30 and 50 mm resolution	0 ... 18 m
Detection capability (resolution)	14 mm, 30 mm, 50 mm
Supply voltage (emitter and receiver)	24 V DC ± 20% (external power pack with safe isolation and compensation of 20 ms voltage dip is necessary)
Residual ripple	< 5%
Current consumption	
• Emitter	75 mA
• Receiver	160 mA (without external load)
General value for external fuse in the transmitter and receiver supply leads	4 A
Wave length	880 nm (infrared)
Synchronization	Optically between emitter and receiver
Ambient temperature	
• Operation	0 ... +50 °C
• Storage	–25 ... +70 °C
Relative humidity	15 ... 95%
Degree of protection	IP65
Safety class to DIN VDE 0106	III
Vibration resistance	5 *g*, 10 ... 55 Hz acc. to IEC/EN 60068-2-6
Shock resistance	10 *g*, 16 ms to IEC/EN 60068-2-29

Signal inputs and outputs (local socket, optional)

Signal inputs	
• Restart inhibit unlocking	1 button with 1 NO contact (floating)
- Min. switching time	300 ms
- Max. switching time	4 sec
• Teach-in	2-pole key-operated switch (selector switch) (floating)
- Simultaneity	< 500 ms
Voltage output (for command devices or safety sensors only)	24 V DC ± 20%, max 0.5 A

Receiver/transceiver machine interface, ASIsafe

OSSDs safety switching outputs	4 bit AS-i data		
	Minimum	Typical	Maximum
Permissible cable length	-	-	100 m
Restart time after beam interruption	-	140 ms	-
Slave address area	1	-	31
Slave address area (WE)	0 (ex works)		
ID code/IO code emitter	-		
ID code receiver	B		
IO code receiver	0		
AS-i profile	Secure slave		
Cycle time according to AS-i specification	5 ms		
OSSD response time	Beam number dependent, see operating instructions		
Additional AS-i system response time	40 ms		

Application of the EN ISO 13849-1 standard:
2006 "Safety of machinery" for 3SF78 44 ASIsafe light curtains and light grids

	Protection field height/number of beams	PL 13849-1	Category ISO 13849-1	Cat. 954-1	PFH_D	$T_{M/years}$
3SF78 44-... light grids	4-beam	e	4	4	1.90×10^{-8}	20
3SF78 44-... light curtain	900 mm	e	4	4	2.26×10^{-8}	20
3SF78 44-... light curtain	1800 mm	e	4	4	2.67×10^{-8}	20

Explanation

PFH_D = Probability of dangerous failure per hour

PL = Performance level
Discrete level used to specify the ability of safety-related parts of control systems to perform a safety function under foreseeable conditions: from PL "a" (highest probability of failure) to PL "e" (lowest probability of failure).

For further explanations, see the brochure "European machinery directive - implemented easily", Order No. E20001-A230-M103-V1-7600.

Ordering notes

Included in the scope of supply:

3SF78 44 light curtains with blanking, muting or sequence control system function package	
Emitter	3RG78 48-0AB mounting bracket set and emitter insert
Receiver	3RG78 48-0AB mounting bracket set, operating instructions/data sheets and safety key
• in addition with 14 mm resolution	3RG78 48-0FH test rod (14/24/33 and 19/29 mm)
• in addition with 30 mm resolution	3RG78 48-0AH/BH test rod (14/30 and 38 mm)
Guest devices of the 3RG78 42 series	
Emitter	3RG78 48-0AB mounting bracket set
Receiver	3RG78 48-0AB mounting bracket set
• in addition with 14/30 mm resolution	3RG78 48-0AH test rod
3SF78 44 light grids with muting function package	
Emitter	3RG78 48-0AB mounting bracket set and emitter insert
Receiver	3RG78 48-0AB mounting bracket set, operating instructions/data sheets
3SF78 44 transceiver with muting function package	
Transceiver	3RG78 48-0AB mounting bracket set, operating instructions/data sheets

Selection and Ordering data

Light curtains with blanking function package ASIsafe[1)]

Protection field height mm	Type	Standard device 14 mm resolution Order No.	Standard device 30 mm resolution Order No.
Resolution 14 mm and 30 mm			
300	Receiver	**3SF78 44-6BB04-0SS1**	**3SF78 44-6BD04-0SS1**
300	Emitter	**3SF78 44-6SB04-0SS0**	**3SF78 44-6SD04-0SS0**
450	Receiver	**3SF78 44-6BB06-0SS1**	**3SF78 44-6BD06-0SS1**
450	Emitter	**3SF78 44-6SB06-0SS0**	**3SF78 44-6SD06-0SS0**
600	Receiver	**3SF78 44-6BB08-0SS1**	**3SF78 44-6BD08-0SS1**
600	Emitter	**3SF78 44-6SB08-0SS0**	**3SF78 44-6SD08-0SS0**
750	Receiver	**3SF78 44-6BB11-0SS1**	**3SF78 44-6BD11-0SS1**
750	Emitter	**3SF78 44-6SB11-0SS0**	**3SF78 44-6SD11-0SS0**
900	Receiver	**3SF78 44-6BB13-0SS1**	**3SF78 44-6BD13-0SS1**
900	Emitter	**3SF78 44-6SB13-0SS0**	**3SF78 44-6SD13-0SS0**
1050	Receiver	**3SF78 44-6BB15-0SS1**	**3SF78 44-6BD15-0SS1**
1050	Emitter	**3SF78 44-6SB15-0SS0**	**3SF78 44-6SD15-0SS0**
1200	Receiver	**3SF78 44-6BB17-0SS1**	**3SF78 44-6BD17-0SS1**
1200	Emitter	**3SF78 44-6SB17-0SS0**	**3SF78 44-6SD17-0SS0**
1350	Receiver	**On request**	**3SF78 44-6BD20-0SS1**
1350	Emitter	**On request**	**3SF78 44-6SD20-0SS0**
1500	Receiver	**On request**	**3SF78 44-6BD22-0SS1**
1500	Emitter	**On request**	**3SF78 44-6SD22-0SS0**
1650	Receiver	**On request**	**3SF78 44-6BD24-0SS1**
1650	Emitter	**On request**	**3SF78 44-6SD24-0SS0**
1800	Receiver	**On request**	**3SF78 44-6BD26-0SS1**
1800	Emitter	**On request**	**3SF78 44-6SD26-0SS0**

1) For scope of supply see top of page 4/51

Light curtains with muting function package ASIsafe[1)]

Protection field height	Type	Standard device	Host device		Guest device
mm		Order No.	Order No.		Order No.
Resolution 30 mm					
300	Receiver	**3SF78 44-6MD04-0SS1**	**On request**		**3RG78 42-6DD21**
300	Emitter	**3SF78 44-6SD04-0SS0**	**On request**		**3RG78 42-6DD20**
450	Receiver	**3SF78 44-6MD06-0SS1**	**On request**	►	**3RG78 42-6DE21**
450	Emitter	**3SF78 44-6SD06-0SS0**	**On request**	►	**3RG78 42-6DE20**
600	Receiver	**3SF78 44-6MD08-0SS1**	**On request**		**3RG78 42-6DF21**
600	Emitter	**3SF78 44-6SD08-0SS0**	**On request**		**3RG78 42-6DF20**
750	Receiver	**3SF78 44-6MD11-0SS1**	**On request**		**3RG78 42-6DG21**
750	Emitter	**3SF78 44-6SD11-0SS0**	**On request**		**3RG78 42-6DG20**
900	Receiver	**3SF78 44-6MD13-0SS1**	**On request**		**3RG78 42-6DH21**
900	Emitter	**3SF78 44-6SD13-0SS0**	**On request**		**3RG78 42-6DH20**
1050	Receiver	**3SF78 44-6MD15-0SS1**	**On request**		**3RG78 42-6DJ21**
1050	Emitter	**3SF78 44-6SD15-0SS0**	**On request**		**3RG78 42-6DJ20**
1200	Receiver	**3SF78 44-6MD17-0SS1**	**On request**		**3RG78 42-6DK21**
1200	Emitter	**3SF78 44-6SD17-0SS0**	**On request**		**3RG78 42-6DK20**
1350	Receiver	**3SF78 44-6MD20-0SS1**	**On request**		**3RG78 42-6DL21**
1350	Emitter	**3SF78 44-6SD20-0SS0**	**On request**		**3RG78 42-6DL20**
1500	Receiver	**3SF78 44-6MD22-0SS1**	**On request**		**3RG78 42-6DM21**
1500	Emitter	**3SF78 44-6SD22-0SS0**	**On request**		**3RG78 42-6DM20**
1650	Receiver	**3SF78 44-6MD24-0SS1**	**On request**		**3RG78 42-6DN21**
1650	Emitter	**3SF78 44-6SD24-0SS0**	**On request**		**3RG78 42-6DN20**
1800	Receiver	**3SF78 44-6MD26-0SS1**	**On request**		**3RG78 42-6DP21**
1800	Emitter	**3SF78 44-6SD26-0SS0**	**On request**		**3RG78 42-6DP20**

Light curtains with muting function package ASIsafe and integrated LED[1)]

Protection field height	Type	Standard device	Host device		Guest device
mm		Order No.	Order No.		Order No.
Resolution 30 mm					
300	Receiver	**3SF78 44-6MD04-0KS1**	**On request**		**3RG78 42-6DD21**
300	Emitter	**3SF78 44-6SD04-0SS0**	**On request**		**3RG78 42-6DD20**
450	Receiver	**3SF78 44-6MD06-0KS1**	**On request**	►	**3RG78 42-6DE21**
450	Emitter	**3SF78 44-6SD06-0SS0**	**On request**	►	**3RG78 42-6DE20**
600	Receiver	**3SF78 44-6MD08-0KS1**	**On request**		**3RG78 42-6DF21**
600	Emitter	**3SF78 44-6SD08-0SS0**	**On request**		**3RG78 42-6DF20**
750	Receiver	**3SF78 44-6MD11-0KS1**	**On request**		**3RG78 42-6DG21**
750	Emitter	**3SF78 44-6SD11-0SS0**	**On request**		**3RG78 42-6DG20**
900	Receiver	**3SF78 44-6MD13-0KS1**	**On request**		**3RG78 42-6DH21**
900	Emitter	**3SF78 44-6SD13-0SS0**	**On request**		**3RG78 42-6DH20**
1050	Receiver	**3SF78 44-6MD15-0KS1**	**On request**		**3RG78 42-6DJ21**
1050	Emitter	**3SF78 44-6SD15-0SS0**	**On request**		**3RG78 42-6DJ20**
1200	Receiver	**3SF78 44-6MD17-0KS1**	**On request**		**3RG78 42-6DK21**
1200	Emitter	**3SF78 44-6SD17-0SS0**	**On request**		**3RG78 42-6DK20**

1) For scope of supply see top of page 4/51
► Preferred type, available from stock.

Integrated evaluation

Light grids with muting function package ASIsafe[1)]

No. of beams	Beam distance mm	Type	Standard device Order No.
Range 0.8 … 18 m			
4-beam	300	Receiver	**3SF78 44-6MM50-0SS1**
4-beam	300	Emitter	**3SF78 44-6SM50-0SS0**
3-beam	400	Receiver	**3SF78 44-6MP50-0SS1**
3-beam	400	Emitter	**3SF78 44-6SP50-0SS0**
2-beam	500	Receiver	**3SF78 44-6MS50-0SS1**
2-beam	500	Emitter	**3SF78 44-6SS50-0SS0**
Range 6 … 70 m			
4-beam	300	Receiver	**3SF78 44-6MM51-0SS1**
4-beam	300	Emitter	**3SF78 44-6SM51-0SS0**
3-beam	400	Receiver	**3SF78 44-6MP51-0SS1**
3-beam	400	Emitter	**3SF78 44-6SP51-0SS0**
2-beam	500	Receiver	**3SF78 44-6MS51-0SS1**
2-beam	500	Emitter	**3SF78 44-6SS51-0SS0**

Light grids with muting function package ASIsafe and integrated LED[1)]

No. of beams	Beam distance mm	Type	Standard device Order No.
Range 0.8 … 18 m			
4-beam	300	Receiver	**3SF78 44-6MM50-0KS1**
4-beam	300	Emitter	**3SF78 44-6SM50-0SS0**
3-beam	400	Receiver	**3SF78 44-6MP50-0KS1**
3-beam	400	Emitter	**3SF78 44-6SP50-0SS0**
2-beam	500	Receiver	**3SF78 44-6MS50-0KS1**
2-beam	500	Emitter	**3SF78 44-6SS50-0SS0**

Transceiver with muting function package ASIsafe[1)]

No. of beams	Beam distance mm	Type	Standard device Order No.
Range 6.5 m			
2-beam	500	Transceiver ►	**3SF78 44-6MS50-0ST0**
2-beam	500	Transceiver with integrated LED	**3SF78 44-6MS50-0MT0**
Reflecting mirrors for transceivers			**3RG78 48-1TL**

1) For scope of supply see top of page 4/51.
► Preferred type, available from stock.

Light curtains with sequence control system function package ASIsafe[1)]

Protection field height	Type	Standard device 14 mm resolution	Standard device 30 mm resolution
mm		Order No.	Order No.
Resolution 14 mm and 30 mm			
300	Receiver	**3SF78 44-6TB04-0SS1**	**3SF78 44-6TD04-0SS1**
300	Emitter	**3SF78 44-6SB04-0SS0**	**3SF78 44-6SD04-0SS0**
450	Receiver	**3SF78 44-6TB06-0SS1**	**3SF78 44-6TD06-0SS1**
450	Emitter	**3SF78 44-6SB06-0SS0**	**3SF78 44-6SD06-0SS0**
600	Receiver	**3SF78 44-6TB08-0SS1**	**3SF78 44-6TD08-0SS1**
600	Emitter	**3SF78 44-6SB08-0SS0**	**3SF78 44-6SD08-0SS0**
750	Receiver	**3SF78 44-6TB11-0SS1**	**3SF78 44-6TD11-0SS1**
750	Emitter	**3SF78 44-6SB11-0SS0**	**3SF78 44-6SD11-0SS0**
900	Receiver	**3SF78 44-6TB13-0SS1**	**3SF78 44-6TD13-0SS1**
900	Emitter	**3SF78 44-6SB13-0SS0**	**3SF78 44-6SD13-0SS0**

Additional products on request.

Dimensions

3SF78 44 standard light curtains, 3SF78 44 light grids

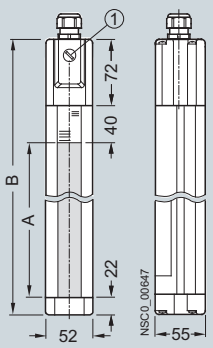

① Pg 9 cover (receiver only, for local interface)
A Protection field height (see Selection and Ordering data)
B Overall length = Protection field height A + 134 mm

3RG78 48-1TL reflecting mirror

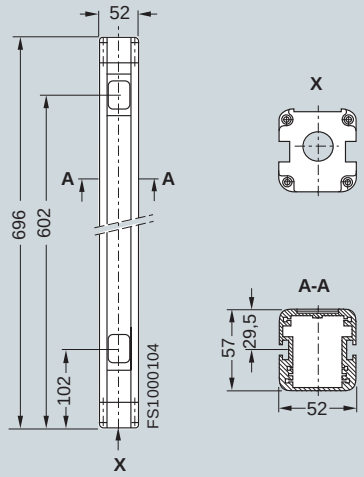

3SF78 44 light grids, additional dimensions

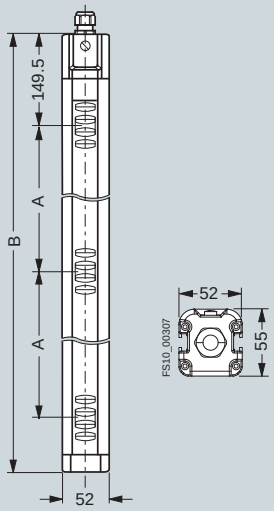

Additional dimensions for light grids only:

Type	B	A	Beams
3SF78 44-..M	1184	300	4
3SF78 44-..P	1034	400	3
3SF78 44-..S	734	500	2

3RG78 48-1TL reflecting mirror (left) and muting transceiver (right)

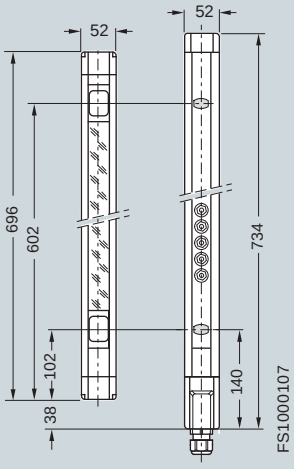

Integrated evaluation, PROFIsafe

Overview

3SF78 44 light curtains and grids for PROFIsafe with integrated evaluation for type 4 in accordance with IEC/EN 61496-1, -2

- with function packages "Blanking", "Muting", and "Cycle Control"
- Resolutions of 14 mm and 30 mm
- Protection field height: 150 mm to 3000 mm
- 2-beam, 3-beam or 4-beam light grids
- Cascading of host and guest devices for greater protection field heights or lengths or for an angular arrangement (as an option).

PROFIBUS connectivity only affects the receiver, as it also switches off the safety switch outputs on the PROFIBUS.

In the following selection and ordering data, a suitable emitter with AS-i M12 connection for power supply is always selected as emitter. However, the emitter can also be selected with other connection options such as M12, Hirschmann, cable gland, or Brad Harrison connector from the 3RG78 44 series. It is important that the selected 3RG78 44/3SF78 44 emitter has the same protection field height and resolution as the 3SF78 44 receiver!

Two standard 3RG78 48-0AB mounting brackets each are enclosed with all devices (can also be ordered as accessories see page 4/92).

Other versions not listed in the ordering data are available upon request.

3SF78 44 (PROFIsafe) program overview

Unit type	Function package	Output	Connection type	For light curtains: Resolution / For light grids and transceivers: Range		LED indicator light	See page
				14 mm	30 mm		
Light curtains	Blanking	PROFIsafe	PROFIsafe	✔	✔	–	4/60
Light curtains	Muting	PROFIsafe	PROFIsafe	✔	✔	–	4/60
Light grids	Muting	PROFIsafe	PROFIsafe	0.8 ... 18 m		–	4/62
Transceivers	Muting	PROFIsafe	PROFIsafe	6.5 m		with and without	4/62
Light curtains	Sequence control system	PROFIsafe	PROFIsafe	✔	–	–	4/62
Accessories							
Electrical connection							
• Connecting cable with M12 connector, also applicable for supplying power to the PROFIsafe emitter							4/95
Accessory cable							
• for the local connection to connect muting lights, key-operated switches, reset buttons, etc.							4/94
Assembly materials							
• Fixing columns, reflecting mirror							4/91
• Muting mounting systems							4/92
• Muting accessories							4/95
Laser alignment aids, diagnostic software							4/93

Technical specifications

Type	3SF78 44
Safety category to EN, IEC 61496-1, -2	Type 4
Protection field height	
• for 14 and 30 mm resolution	150 ... 1800 mm
• for 50 mm resolution	450 ... 3000 mm
Protection field width, range	
• for 14 mm resolution	0 ... 6 m
• for 30 and 50 mm resolution	0 ... 18 m
Detection capability (resolution)	14 mm, 30 mm, 50 mm
Supply voltage (emitter and receiver)	24 V DC ± 20%
Wave length	880 nm (infrared)
Synchronization	Optically between emitter and receiver
Ambient temperature	
• Operation	0 ... +50 °C
• Storage	-20 ... +60 °C
Relative humidity	15 ... 95%, without condensation
Degree of protection	IP65
Safety class to DIN VDE 0106	III
Vibration resistance	5 *g*, 10 ... 55 Hz to IEC/EN 60068-2-6
Shock resistance	10 *g*, 16 ms to IEC/EN 60068-2-29

Signal inputs and outputs (local socket, optional)

Signal inputs	
• Restart inhibit unlocking	1 button with 1 NO contact (floating)
- Min. switching time	300 ms
- Max. switching time	4 sec
• Teach-in	2-pole key-operated switch (selector switch) (floating)
- Simultaneity	< 500 ms
Voltage output (for command devices or safety sensors only)	24 V DC ± 20%, max. 0.5 A

General PROFIsafe receiver system data

Safety category	• Type 4 to EN IEC 61496-1 • SIL 3 to IEC 61508
Supply voltage U_V	24 V DC, ±20%
Residual ripple of supply voltage U_V	± 5% within the limits of U_V, external power pack with safe isolation
Current consumption at	
• U_V = 28.8 V DC, +20%	150 mA
• U_V = 24 V DC	160 mA
• U_V = 19.2 V DC, -20%	170 mA
PROFIBUS	
• Data rate	9.6 kBd ... 12 MBd
• Connection	M12 connector, b-coded
Additional PROFIsafe part response time in the receiver	20 ms
Connection cable length	
• PROFIBUS output	0.2 m
• PROFIBUS input	0.4 m
• Power supply	0.6 m
Supply cable length, max.	< 100 m

PROFIsafe services

PROFIsafe driver version	V2, supports PROFIsafe profiles V1 and V2
Cyclic data	4 user data byte input data 4 user data byte output data
Acyclical data	To read the switching status of the individual beams
Ensure the parameters in the F-CPU via proxy function block for	• S7-315F • S7-317F • S7-416F
Number of parameter sets, can be changed using a secure program in the F-CPU	max. 255, depends on the available memory on the F-CPU
Restart delay is the larger value out of	• Watchdog time in the F-CPU +20 ms • Receiver restart delay

Integrated evaluation, PROFIsafe

Application of the EN ISO 13849-1 standard:
2006 "Safety of machinery" for 3SF78 44 PROFIsafe light curtains and light grids

	Protection field height/ number of beams	PL 13849-1	Category ISO 13849-1	Cat. 954-1	PFH_D	$T_{M/years}$
3SF78 44-... light grids	4-beam	e	4	4	1.90×10^{-8}	20
3SF78 44-... light curtain	900 mm	e	4	4	2.26×10^{-8}	20
3SF78 44-... light curtain	1800 mm	e	4	4	2.67×10^{-8}	20

Explanation

PFH_D = Probability of dangerous failure per hour

PL = Performance level
Discrete level used to specify the ability of safety-related parts of control systems to perform a safety function under foreseeable conditions: From PL "a" (highest probability of failure) to PL "e" (lowest probability of failure).

For further explanations, see the brochure "European machinery directive – implemented easily", Order No. E20001-A230-M103-V1-7600.

Selection and Ordering data

		Order No.
Accessories for PROFIsafe light curtains		
PROFIBUS M12 terminating connector	►	**6GK1 905-0EC00**
For PROFIBUS DP 1 packet = 5 items		
PROFIBUS M12 connector for receivers		
1 packet = 5 items		
• Male insert	►	**6GK1 905-0EA00**
• Socket insert	►	**6GK1 905-0EB00**
Connecting cables for receivers		
2-core (inverted coding) preassembled, with M12 connectors, in different lengths:		
0.5 m	►	**6XV1830-3DE50**
1.5 m	►	**6XV1830-3DH15**
3.0 m	►	**6XV1830-3DH30**
5.0 m	►	**6XV1830-3DH50**
10.0 m	►	**6XV1830-3DN10**
15.0 m	►	**6XV1830-3DN15**
Optical PC adapter cables	►	**3RG78 38-1DC**

		Order No.
Connecting cables for emitters and receivers		
Power supply cable with M12 connector, straight, shielded, 5-pole in several lengths:		
5.0 m	►	**3RG7848-2EA**
10.0 m	►	**3RG7848-2EC**
15.0 m	►	**3RG7848-2EE**
SafetyLab parameterization and diagnostic software	H	**3RG78 48-2SL**
incl. PC cable, RS232 – IR		

► Preferred type, available from stock.
H: Subject to export regulations AL = N and ECCN = 5D992B1.

Selection and Ordering data

Light curtains with blanking function package PROFIsafe[1)]

Protection field height	Type	Standard device	Host device		Guest device
mm		Order No.	Order No.		Order No.
Resolution 14 mm					
300	Receiver	**3SF78 44-8BB04-0SS1**	**3SF78 44-8BB04-1SS1**		**3RG78 42-6BD21**
300	Emitter	**3SF78 44-6SB04-0SS0**	**3SF78 44-6SB04-1SS0**		**3RG78 42-6BD20**
450	Receiver	**3SF78 44-8BB06-0SS1**	**3SF78 44-8BB06-1SS1**		**3RG78 42-6BE21**
450	Emitter	**3SF78 44-6SB06-0SS0**	**3SF78 44-6SB06-1SS0**		**3RG78 42-6BE20**
600	Receiver	**3SF78 44-8BB08-0SS1**	**3SF78 44-8BB08-1SS1**		**3RG78 42-6BF21**
600	Emitter	**3SF78 44-6SB08-0SS0**	**3SF78 44-6SB08-1SS0**		**3RG78 42-6BF20**
750	Receiver	**3SF78 44-8BB11-0SS1**	**3SF78 44-8BB11-1SS1**		**3RG78 42-6BG21**
750	Emitter	**3SF78 44-6SB11-0SS0**	**3SF78 44-6SB11-1SS0**		**3RG78 42-6BG20**
900	Receiver	**3SF78 44-8BB13-0SS1**	**3SF78 44-8BB13-1SS1**		**3RG78 42-6BH21**
900	Emitter	**3SF78 44-6SB13-0SS0**	**3SF78 44-6SB13-1SS0**		**3RG78 42-6BH20**
1050	Receiver	**3SF78 44-8BB15-0SS1**	**3SF78 44-8BB15-1SS1**		**3RG78 42-6BJ21**
1050	Emitter	**3SF78 44-6SB15-0SS0**	**3SF78 44-6SB15-1SS0**		**3RG78 42-6BJ20**
1200	Receiver	**3SF78 44-8BB17-0SS1**	**3SF78 44-8BB17-1SS1**		**3RG78 42-6BK21**
1200	Emitter	**3SF78 44-6SB17-0SS0**	**3SF78 44-6SB17-1SS0**		**3RG78 42-6BK20**
1350	Receiver	**3SF78 44-8BB20-0SS1**	**3SF78 44-8BB20-1SS1**		**3RG78 42-6BL21**
1350	Emitter	**3SF78 44-6SB20-0SS0**	**3SF78 44-6SB20-1SS0**		**3RG78 42-6BL20**
1500	Receiver	**3SF78 44-8BB22-0SS1**	**3SF78 44-8BB22-1SS1**		**3RG78 42-6BM21**
1500	Emitter	**3SF78 44-6SB22-0SS0**	**3SF78 44-6SB22-1SS0**		**3RG78 42-6BM20**
1650	Receiver	**3SF78 44-8BB24-0SS1**	**3SF78 44-8BB24-1SS1**		**3RG78 42-6BN21**
1650	Emitter	**3SF78 44-6SB24-0SS0**	**3SF78 44-6SB24-1SS0**		**3RG78 42-6BN20**
1800	Receiver	**3SF78 44-8BB26-0SS1**	**3SF78 44-8BB26-1SS1**		**3RG78 42-6BP21**
1800	Emitter	**3SF78 44-6SB26-0SS0**	**3SF78 44-6SB26-1SS0**		**3RG78 42-6BP20**
Resolution 30 mm					
300	Receiver	**3SF78 44-8BD04-0SS1**	**3SF78 44-8BD04-1SS1**		**3RG78 42-6DD21**
300	Emitter	**3SF78 44-6SD04-0SS0**	**3SF78 44-6SD04-1SS0**		**3RG78 42-6DD20**
450	Receiver	**3SF78 44-8BD06-0SS1**	**3SF78 44-8BD06-1SS1**	►	**3RG78 42-6DE21**
450	Emitter	**3SF78 44-6SD06-0SS0**	**3SF78 44-6SD06-1SS0**	►	**3RG78 42-6DE20**
600	Receiver	**3SF78 44-8BD08-0SS1**	**3SF78 44-8BD08-1SS1**		**3RG78 42-6DF21**
600	Emitter	**3SF78 44-6SD08-0SS0**	**3SF78 44-6SD08-1SS0**		**3RG78 42-6DF20**
750	Receiver	**3SF78 44-8BD11-0SS1**	**3SF78 44-8BD11-1SS1**		**3RG78 42-6DG21**
750	Emitter	**3SF78 44-6SD11-0SS0**	**3SF78 44-6SD11-1SS0**		**3RG78 42-6DG20**
900	Receiver	**3SF78 44-8BD13-0SS1**	**3SF78 44-8BD13-1SS1**		**3RG78 42-6DH21**
900	Emitter	**3SF78 44-6SD13-0SS0**	**3SF78 44-6SD13-1SS0**		**3RG78 42-6DH20**
1050	Receiver	**3SF78 44-8BD15-0SS1**	**3SF78 44-8BD15-1SS1**		**3RG78 42-6DJ21**
1050	Emitter	**3SF78 44-6SD15-0SS0**	**3SF78 44-6SD15-1SS0**		**3RG78 42-6DJ20**
1200	Receiver	**3SF78 44-8BD17-0SS1**	**3SF78 44-8BD17-1SS1**		**3RG78 42-6DK21**
1200	Emitter	**3SF78 44-6SD17-0SS0**	**3SF78 44-6SD17-1SS0**		**3RG78 42-6DK20**
1350	Receiver	**3SF78 44-8BD20-0SS1**	**3SF78 44-8BD20-1SS1**		**3RG78 42-6DL21**
1350	Emitter	**3SF78 44-6SD20-0SS0**	**3SF78 44-6SD20-1SS0**		**3RG78 42-6DL20**
1500	Receiver	**3SF78 44-8BD22-0SS1**	**3SF78 44-8BD22-1SS1**		**3RG78 42-6DM21**
1500	Emitter	**3SF78 44-6SD22-0SS0**	**3SF78 44-6SD22-1SS0**		**3RG78 42-6DM20**
1650	Receiver	**3SF78 44-8BD24-0SS1**	**3SF78 44-8BD24-1SS1**		**3RG78 42-6DN21**
1650	Emitter	**3SF78 44-6SD24-0SS0**	**3SF78 44-6SD24-1SS0**		**3RG78 42-6DN20**

1) For scope of supply see top of page 4/51.
► Preferred type, available from stock.

Integrated evaluation

Protection field height	Type	Standard device	Host device	Guest device
mm		Order No.	Order No.	Order No.
1800	Receiver	**3SF78 44-8BD26-0SS1**	**3SF78 44-8BD26-1SS1**	**3RG78 42-6DP21**
1800	Emitter	**3SF78 44-6SD26-0SS0**	**3SF78 44-6SD26-1SS0**	**3RG78 42-6DP20**

Light curtains with muting function package PROFIsafe[1)]

Protection field height	Type	Standard device	Host device	Guest device
mm		Order No.	Order No.	Order No.
Resolution 14 mm				
300	Receiver	**3SF78 44-8MB04-0SS1**	**On request**	**3RG78 42-6BD21**
300	Emitter	**3SF78 44-6SB04-0SS0**	**On request**	**3RG78 42-6BD20**
450	Receiver	**3SF78 44-8MB06-0SS1**	**On request**	**3RG78 42-6BE21**
450	Emitter	**3SF78 44-6SB06-0SS0**	**On request**	**3RG78 42-6BE20**
600	Receiver	**3SF78 44-8MB08-0SS1**	**On request**	**3RG78 42-6BF21**
600	Emitter	**3SF78 44-6SB08-0SS0**	**On request**	**3RG78 42-6BF20**
750	Receiver	**3SF78 44-8MB11-0SS1**	**On request**	**3RG78 42-6BG21**
750	Emitter	**3SF78 44-6SB11-0SS0**	**On request**	**3RG78 42-6BG20**
900	Receiver	**3SF78 44-8MB13-0SS1**	**On request**	**3RG78 42-6BH21**
900	Emitter	**3SF78 44-6SB13-0SS0**	**On request**	**3RG78 42-6BH20**
1050	Receiver	**3SF78 44-8MB15-0SS1**	**On request**	**3RG78 42-6BJ21**
1050	Emitter	**3SF78 44-6SB15-0SS0**	**On request**	**3RG78 42-6BJ20**
1200	Receiver	**3SF78 44-8MB17-0SS1**	**On request**	**3RG78 42-6BK21**
1200	Emitter	**3SF78 44-6SB17-0SS0**	**On request**	**3RG78 42-6BK20**
1350	Receiver	**3SF78 44-8MB20-0SS1**	**On request**	**3RG78 42-6BL21**
1350	Emitter	**3SF78 44-6SB20-0SS0**	**On request**	**3RG78 42-6BL20**
1500	Receiver	**3SF78 44-8MB22-0SS1**	**On request**	**3RG78 42-6BM21**
1500	Emitter	**3SF78 44-6SB22-0SS0**	**On request**	**3RG78 42-6BM20**
1650	Receiver	**3SF78 44-8MB24-0SS1**	**On request**	**3RG78 42-6BN21**
1650	Emitter	**3SF78 44-6SB24-0SS0**	**On request**	**3RG78 42-6BN20**
1800	Receiver	**3SF78 44-8MB26-0SS1**	**On request**	**3RG78 42-6BP21**
1800	Emitter	**3SF78 44-6SB26-0SS0**	**On request**	**3RG78 42-6BP20**
Resolution 30 mm				
300	Receiver	**3SF78 44-8MD04-0SS1**	**On request**	**3RG78 42-6DD21**
300	Emitter	**3SF78 44-6SD04-0SS0**	**On request**	**3RG78 42-6DD20**
450	Receiver	**3SF78 44-8MD06-0SS1**	**On request**	► **3RG78 42-6DE21**
450	Emitter	**3SF78 44-6SD06-0SS0**	**On request**	► **3RG78 42-6DE20**
600	Receiver	**3SF78 44-8MD08-0SS1**	**On request**	**3RG78 42-6DF21**
600	Emitter	**3SF78 44-6SD08-0SS0**	**On request**	**3RG78 42-6DF20**
750	Receiver	**3SF78 44-8MD11-0SS1**	**On request**	**3RG78 42-6DG21**
750	Emitter	**3SF78 44-6SD11-0SS0**	**On request**	**3RG78 42-6DG20**
900	Receiver	**3SF78 44-8MD13-0SS1**	**On request**	**3RG78 42-6DH21**
900	Emitter	**3SF78 44-6SD13-0SS0**	**On request**	**3RG78 42-6DH20**
1050	Receiver	**3SF78 44-8MD15-0SS1**	**On request**	**3RG78 42-6DJ21**
1050	Emitter	**3SF78 44-6SD15-0SS0**	**On request**	**3RG78 42-6DJ20**
1200	Receiver	**3SF78 44-8MD17-0SS1**	**On request**	**3RG78 42-6DK21**
1200	Emitter	**3SF78 44-6SD17-0SS0**	**On request**	**3RG78 42-6DK20**
1350	Receiver	**3SF78 44-8MD20-0SS1**	**On request**	**3RG78 42-6DL21**
1350	Emitter	**3SF78 44-6SD20-0SS0**	**On request**	**3RG78 42-6DL20**

1) For scope of supply see top of page 4/51.
► Preferred type, available from stock.

Protection field height	Type	Standard device	Host device	Guest device
mm		Order No.	Order No.	Order No.
1500	Receiver	**3SF78 44-8MD22-0SS1**	**On request**	**3RG78 42-6DM21**
1500	Emitter	**3SF78 44-6SD22-0SS0**	**On request**	**3RG78 42-6DM20**
1650	Receiver	**3SF78 44-8MD24-0SS1**	**On request**	**3RG78 42-6DN21**
1650	Emitter	**3SF78 44-6SD24-0SS0**	**On request**	**3RG78 42-6DN20**
1800	Receiver	**3SF78 44-8MD26-0SS1**	**On request**	**3RG78 42-6DP21**
1800	Emitter	**3SF78 44-6SD26-0SS0**	**On request**	**3RG78 42-6DP20**

Light grids with muting function package PROFIsafe[1)]

No. of beams	Beam distance	Type	Standard device
	mm		Order No.
Range 0.8 m … 18 m			
4-beam	300	Receiver	**3SF78 44-8MM50-0SS1**
4-beam	300	Emitter	**3SF78 44-6SM50-0SS0**
3-beam	400	Receiver	**3SF78 44-8MP50-0SS1**
3-beam	400	Emitter	**3SF78 44-6SP50-0SS0**
2-beam	500	Receiver	**3SF78 44-8MS50-0SS1**
2-beam	500	Emitter	**3SF78 44-6SS50-0SS0**

Transceiver with muting function package PROFIsafe[1)]

No. of beams	Beam distance	Type	Standard device
	mm		Order No.
Range 6.5 m			
2-beam	500	Transceiver ►	**3SF78 44-8MS50-0ST0**
2-beam	500	Transceiver with integrated LED	**3SF78 44-8MS50-0MT0**
Reflecting mirrors for transceivers			**3RG78 48-1TL**

Light curtains with sequence control system function package PROFIsafe[1)]

Protection field height	Type	Standard device	Host device	Guest device
mm		Order No.	Order No.	
Resolution 14 mm				
300	Receiver	**3SF78 44-8TB04-0SS1**	**3SF78 44-8TB04-1SS1**	**3RG78 42-6BD21**
300	Emitter	**3SF78 44-6SB04-0SS0**	**3SF78 44-6SB04-1SS0**	**3RG78 42-6BD20**
450	Receiver	**3SF78 44-8TB06-0SS1**	**3SF78 44-8TB06-1SS1**	**3RG78 42-6BE21**
450	Emitter	**3SF78 44-6SB06-0SS0**	**3SF78 44-6SB06-1SS0**	**3RG78 42-6BE20**
600	Receiver	**3SF78 44-8TB08-0SS1**	**3SF78 44-8TB08-1SS1**	**3RG78 42-6BF21**
600	Emitter	**3SF78 44-6SB08-0SS0**	**3SF78 44-6SB08-1SS0**	**3RG78 42-6BF20**
750	Receiver	**3SF78 44-8TB11-0SS1**	**3SF78 44-8TB11-1SS1**	**3RG78 42-6BG21**
750	Emitter	**3SF78 44-6SB11-0SS0**	**3SF78 44-6SB11-1SS0**	**3RG78 42-6BG20**
900	Receiver	**3SF78 44-8TB13-0SS1**	**3SF78 44-8TB13-1SS1**	**3RG78 42-6BH21**
900	Emitter	**3SF78 44-6SB13-0SS0**	**3SF78 44-6SB13-1SS0**	**3RG78 42-6BH20**

1) For scope of supply see top of page 4/51.
► Preferred type, available from stock.

Dimensions

3SF78 44 standard light curtains, 3SF78 44 light grids

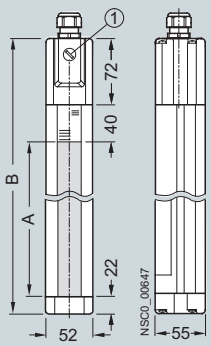

① Pg 9 cover (receiver only, for local interface)

A Protection field height (see Selection and Ordering data)

B Overall length = Protection field height A + 134 mm

3RG78 48-1TL reflecting mirror

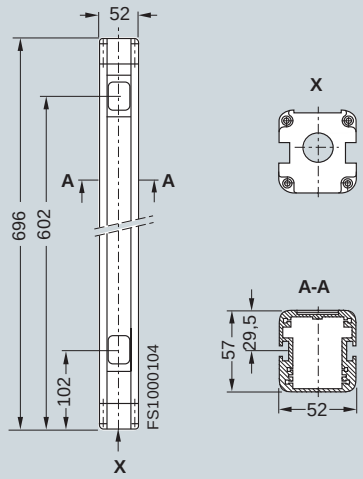

3SF78 44 light grids, additional dimensions

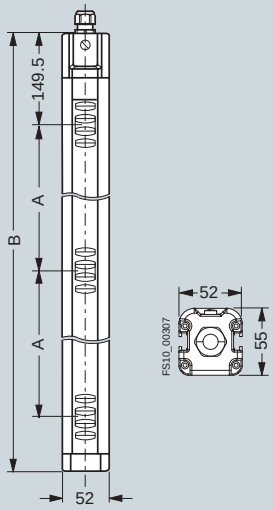

Additional dimensions for light grids only:

Type	B	A	Beams
3SF78 44-..M	1184	300	4
3SF8 44-..P	1034	400	3
3SF8 44-..S	734	500	2

3RG78 48-1TL reflecting mirror (left) and muting transceiver (right)

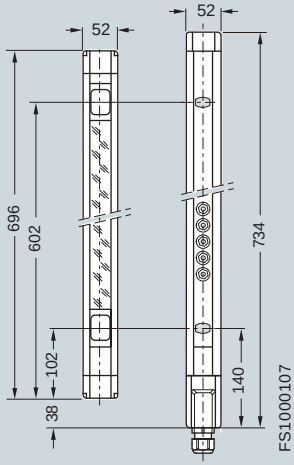

Overview

3SF78 42 light curtains and light grids for ASIsafe for type 4 in accordance with IEC/EN 61496-1, -2

- Resolution: 14, 30, 50, and 90 mm
- Protection field heights: 150 mm to 3000 mm
- 2-beam, 3-beam or 4-beam light grids
- Connection to AS-Interface

Cascading of host and guest devices for greater protection field heights and lengths or for an angular arrangement (optional).

Two standard 3RG78 48-0AB mounting brackets each are enclosed with all devices (can also be ordered as accessories see page 4/92).

Design

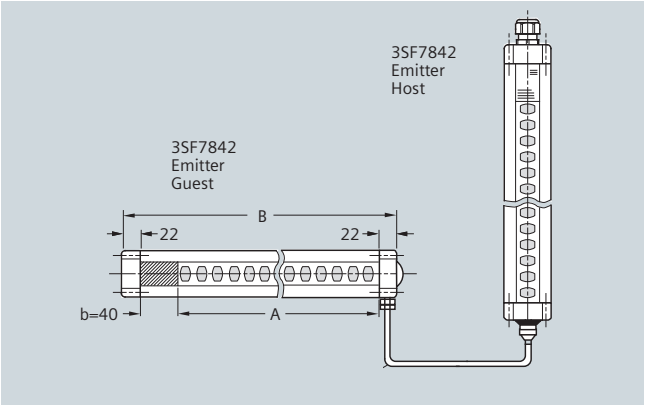

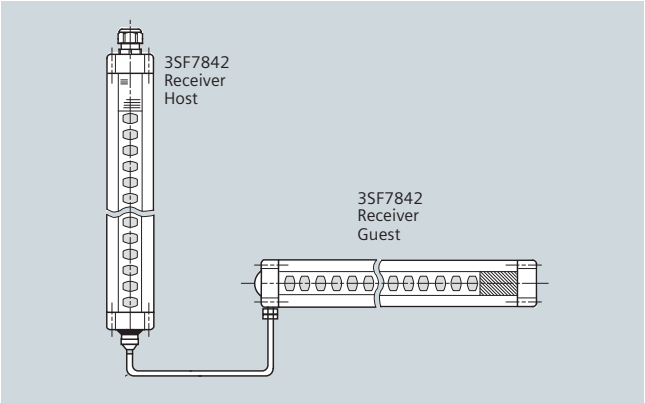

Host/guest: Cascading basic device-subsequent device

3SF78 42 (ASIsafe) program overview

Unit type	Function package	Output	Connection type	For light curtains: Resolution For light grids and transceivers: Range				See page
				14 mm	30 mm	50 mm	90 mm	
Light curtains	–	ASIsafe	ASIsafe	✔	✔	✔	✔	4/64
Light grids	–	ASIsafe	ASIsafe	0.8 ... 18 m; 6 ... 60 m				4/67
Transceivers	–	ASIsafe	ASIsafe	6.5 m				4/64
Accessories								
Electrical connection								
• Connecting cable with M12 connection								4/95
• ASIsafe modules								4/94
Assembly materials								
• Fixing columns, reflecting mirror								4/91
• Muting mounting systems								4/92
• Muting accessories								4/95
Laser alignment assistance, diagnostic software								4/93

External evaluation ASIsafe

Application of the EN ISO 13849-1 standard: 2006 "Safety of machinery" for 3SF78 42 ASIsafe light curtains and light grids

	Protection field height/number of beams	PL 13849-1	Category ISO 13849-1	Cat. 954-1	PFH_D	$T_{M/years}$
3SF78 42-... light grids	4-beam	e	4	4	6.6×10^{-9}	20
3SF78 42-... light curtain	900 mm	e	4	4	7.3×10^{-9}	20
3SF78 42-... light curtain	1800 mm	e	4	4	8.3×10^{-9}	20
3SF78 42-... light curtain	3000 mm	e	4	4	9.5×10^{-9}	20

Explanation

PFH_D = Probability of dangerous failure per hour

PL = Performance level
Discrete level used to specify the ability of safety-related parts of control systems to perform a safety function under foreseeable conditions: From PL "a" (highest probability of failure) to PL "e" (lowest probability of failure).

For further explanations, see the brochure "European machinery directive – implemented easily", Order No. E20001-A230-M103-V1-7600.

Ordering notes

Included in the scope of supply:

3SF78 42 light curtains	
Emitter	3RG78 48-0AB mounting bracket set and emitter insert
Receiver	3RG78 48-0AB mounting bracket set, operating instructions/data sheets and safety key
• in addition with 14 mm resolution	3RG78 48-0FH test rod (14/24/33 and 19/29 mm)
• in addition with 30 mm resolution	3RG78 48-0AH/BH test rod (14/30 and 38 mm)
Guest devices of the 3RG78 42 series	
Emitter	3RG78 48-0AB mounting bracket set
Receiver	3RG78 48-0AB mounting bracket set
• in addition with 14 or 30 mm resolution	3RG78 48-0AH test rod
3SF78 42 light grids	
Emitter	3RG78 48-0AB mounting bracket set and emitter insert
Receiver	3RG78 48-0AB mounting bracket set, operating instructions/data sheets
3SF78 42 transceiver	
Transceiver	3RG78 48-0AB mounting bracket set, operating instructions/data sheets

Selection and Ordering data

Light curtains[1)]

Protection field height	Type	Standard device	Host device	Guest device
mm		Order No.	Order No.	Order No.
Resolution 14 mm				
150	Receiver	**3SF78 42-6BB01**	**–**	**3RG78 42-6BB21**
150	Emitter	**3SF78 42-6BB00**	**–**	**3RG78 42-6BB20**
225	Receiver	**3SF78 42-6BC01**	**3SF78 42-6BC11**	**3RG78 42-6BC21**
225	Emitter	**3SF78 42-6BC00**	**3SF78 42-6BC10**	**3RG78 42-6BC20**
300	Receiver	**3SF78 42-6BD01**	**3SF78 42-6BD11**	**3RG78 42-6BD21**
300	Emitter	**3SF78 42-6BD00**	**3SF78 42-6BD10**	**3RG78 42-6BD20**
450	Receiver	**3SF78 42-6BE01**	**3SF78 42-6BE11**	**3RG78 42-6BE21**
450	Emitter	**3SF78 42-6BE00**	**3SF78 42-6BE10**	**3RG78 42-6BE20**
600	Receiver	**3SF78 42-6BF01**	**3SF78 42-6BF11**	**3RG78 42-6BF21**
600	Emitter	**3SF78 42-6BF00**	**3SF78 42-6BF10**	**3RG78 42-6BF20**

1) For scope of supply see top of page 4/64

Protection field height	Type	Standard device	Host device		Guest device
mm		Order No.	Order No.		Order No.
750	Receiver	**3SF78 42-6BG01**	**3SF78 42-6BG11**		**3RG78 42-6BG21**
750	Emitter	**3SF78 42-6BG00**	**3SF78 42-6BG10**		**3RG78 42-6BG20**
900	Receiver	**3SF78 42-6BH01**	**3SF78 42-6BH11**		**3RG78 42-6BH21**
900	Emitter	**3SF78 42-6BH00**	**3SF78 42-6BH10**		**3RG78 42-6BH20**
1050	Receiver	**3SF78 42-6BJ01**	**3SF78 42-6BJ11**		**3RG78 42-6BJ21**
1050	Emitter	**3SF78 42-6BJ00**	**3SF78 42-6BJ10**		**3RG78 42-6BJ20**
1200	Receiver	**3SF78 42-6BK01**	**3SF78 42-6BK11**		**3RG78 42-6BK21**
1200	Emitter	**3SF78 42-6BK00**	**3SF78 42-6BK10**		**3RG78 42-6BK20**
1350	Receiver	**3SF78 42-6BL01**	**3SF78 42-6BL11**		**3RG78 42-6BL21**
1350	Emitter	**3SF78 42-6BL00**	**3SF78 42-6BL10**		**3RG78 42-6BL20**
1500	Receiver	**3SF78 42-6BM01**	**3SF78 42-6BM11**		**3RG78 42-6BM21**
1500	Emitter	**3SF78 42-6BM00**	**3SF78 42-6BM10**		**3RG78 42-6BM20**
1650	Receiver	**3SF78 42-6BN01**	**3SF78 42-6BN11**		**3RG78 42-6BN21**
1650	Emitter	**3SF78 42-6BN00**	**3SF78 42-6BN10**		**3RG78 42-6BN20**
1800	Receiver	**3SF78 42-6BP01**	**3SF78 42-6BP11**		**3RG78 42-6BP21**
1800	Emitter	**3SF78 42-6BP00**	**3SF78 42-6BP10**		**3RG78 42-6BP20**
Resolution 30 mm					
150	Receiver	**3SF78 42-6DB01**	**–**		**3RG78 42-6DB21**
150	Emitter	**3SF78 42-6DB00**	**–**		**3RG78 42-6DB20**
225	Receiver	**3SF78 42-6DC01**	**3SF78 42-6DC11**		**3RG78 42-6DC21**
225	Emitter	**3SF78 42-6DC00**	**3SF78 42-6DC10**		**3RG78 42-6DC20**
300	Receiver	**3SF78 42-6DD01**	**3SF78 42-6DD11**		**3RG78 42-6DD21**
300	Emitter	**3SF78 42-6DD00**	**3SF78 42-6DD10**		**3RG78 42-6DD20**
450	Receiver	**3SF78 42-6DE01**	**3SF78 42-6DE11**	►	**3RG78 42-6DE21**
450	Emitter	**3SF78 42-6DE00**	**3SF78 42-6DE10**	►	**3RG78 42-6DE20**
600	Receiver	**3SF78 42-6DF01**	**3SF78 42-6DF11**		**3RG78 42-6DF21**
600	Emitter	**3SF78 42-6DF00**	**3SF78 42-6DF10**		**3RG78 42-6DF20**
750	Receiver	**3SF78 42-6DG01**	**3SF78 42-6DG11**		**3RG78 42-6DG21**
750	Emitter	**3SF78 42-6DG00**	**3SF78 42-6DG10**		**3RG78 42-6DG20**
900	Receiver	**3SF78 42-6DH01**	**3SF78 42-6DH11**		**3RG78 42-6DH21**
900	Emitter	**3SF78 42-6DH00**	**3SF78 42-6DH10**		**3RG78 42-6DH20**
1050	Receiver	**3SF78 42-6DJ01**	**3SF78 42-6DJ11**		**3RG78 42-6DJ21**
1050	Emitter	**3SF78 42-6DJ00**	**3SF78 42-6DJ10**		**3RG78 42-6DJ20**
1200	Receiver	**3SF78 42-6DK01**	**3SF78 42-6DK11**		**3RG78 42-6DK21**
1200	Emitter	**3SF78 42-6DK00**	**3SF78 42-6DK10**		**3RG78 42-6DK20**
1350	Receiver	**3SF78 42-6DL01**	**3SF78 42-6DL11**		**3RG78 42-6DL21**
1350	Emitter	**3SF78 42-6DL00**	**3SF78 42-6DL10**		**3RG78 42-6DL20**
1500	Receiver	**3SF78 42-6DM01**	**3SF78 42-6DM11**		**3RG78 42-6DM21**
1500	Emitter	**3SF78 42-6DM00**	**3SF78 42-6DM10**		**3RG78 42-6DM20**
1650	Receiver	**3SF78 42-6DN01**	**3SF78 42-6DN11**		**3RG78 42-6DN21**
1650	Emitter	**3SF78 42-6DN00**	**3SF78 42-6DN10**		**3RG78 42-6DN20**
1800	Receiver	**3SF78 42-6DP01**	**3SF78 42-6DP11**		**3RG78 42-6DP21**
1800	Emitter	**3SF78 42-6DP00**	**3SF78 42-6DP10**		**3RG78 42-6DP20**
Resolution 50 mm					
450	Receiver	**3SF78 42-6EE01**	**3SF78 42-6EE11**		**3RG78 42-6EE21**
450	Emitter	**3SF78 42-6EE00**	**3SF78 42-6EE10**		**3RG78 42-6EE20**
600	Receiver	**3SF78 42-6EF01**	**3SF78 42-6EF11**		**3RG78 42-6EF21**
600	Emitter	**3SF78 42-6EF00**	**3SF78 42-6EF10**		**3RG78 42-6EF20**

► Preferred type, available from stock.

External evaluation ASIsafe

Protection field height	Type	Standard device	Host device	Guest device
mm		Order No.	Order No.	Order No.
750	Receiver	**3SF78 42-6EG01**	**3SF78 42-6EG11**	**3RG78 42-6EG21**
750	Emitter	**3SF78 42-6EG00**	**3SF78 42-6EG10**	**3RG78 42-6EG20**
900	Receiver	**3SF78 42-6EH01**	**3SF78 42-6EH11**	**3RG78 42-6EH21**
900	Emitter	**3SF78 42-6EH00**	**3SF78 42-6EH10**	**3RG78 42-6EH20**
1050	Receiver	**3SF78 42-6EJ01**	**3SF78 42-6EJ11**	**3RG78 42-6EJ21**
1050	Emitter	**3SF78 42-6EJ00**	**3SF78 42-6EJ10**	**3RG78 42-6EJ20**
1200	Receiver	**3SF78 42-6EK01**	**3SF78 42-6EK11**	**3RG78 42-6EK21**
1200	Emitter	**3SF78 42-6EK00**	**3SF78 42-6EK10**	**3RG78 42-6EK20**
1350	Receiver	**3SF78 42-6EL01**	**3SF78 42-6EL11**	**3RG78 42-6EL21**
1350	Emitter	**3SF78 42-6EL00**	**3SF78 42-6EL10**	**3RG78 42-6EL20**
1500	Receiver	**3SF78 42-6EM01**	**3SF78 42-6EM11**	**3RG78 42-6EM21**
1500	Emitter	**3SF78 42-6EM00**	**3SF78 42-6EM10**	**3RG78 42-6EM20**
1650	Receiver	**3SF78 42-6EN01**	**3SF78 42-6EN11**	**3RG78 42-6EN21**
1650	Emitter	**3SF78 42-6EN00**	**3SF78 42-6EN10**	**3RG78 42-6EN20**
1800	Receiver	**3SF78 42-6EP01**	**3SF78 42-6EP11**	**3RG78 42-6EP21**
1800	Emitter	**3SF78 42-6EP00**	**3SF78 42-6EP10**	**3RG78 42-6EP20**
2100	Receiver	**3SF78 42-6ER01**	**3SF78 42-6ER11**	**3RG78 42-6ER21**
2100	Emitter	**3SF78 42-6ER00**	**3SF78 42-6ER10**	**3RG78 42-6ER20**
2400	Receiver	**3SF78 42-6ES01**	**3SF78 42-6ES11**	**3RG78 42-6ES21**
2400	Emitter	**3SF78 42-6ES00**	**3SF78 42-6ES10**	**3RG78 42-6ES20**
2700	Receiver	**3SF78 42-6ET01**	**3SF78 42-6ET11**	**3RG78 42-6ET21**
2700	Emitter	**3SF78 42-6ET00**	**3SF78 42-6ET10**	**3RG78 42-6ET20**
3000	Receiver	**3SF78 42-6EU01**	**3SF78 42-6EU11**	**3RG78 42-6EU21**
3000	Emitter	**3SF78 42-6EU00**	**3SF78 42-6EU10**	**3RG78 42-6EU20**
Resolution 90 mm				
750	Receiver	**3SF78 42-6JG01**	**3SF78 42-6JG11**	**3RG78 42-6JG21**
750	Emitter	**3SF78 42-6JG00**	**3SF78 42-6JG10**	**3RG78 42-6JG20**
900	Receiver	**3SF78 42-6JH01**	**3SF78 42-6JH11**	**3RG78 42-6JH21**
900	Emitter	**3SF78 42-6JH00**	**3SF78 42-6JH10**	**3RG78 42-6JH20**
1050	Receiver	**3SF78 42-6JJ01**	**3SF78 42-6JJ11**	**3RG78 42-6JJ21**
1050	Emitter	**3SF78 42-6JJ00**	**3SF78 42-6JJ10**	**3RG78 42-6JJ20**
1200	Receiver	**3SF78 42-6JK01**	**3SF78 42-6JK11**	**3RG78 42-6JK21**
1200	Emitter	**3SF78 42-6JK00**	**3SF78 42-6JK10**	**3RG78 42-6JK20**
1350	Receiver	**3SF78 42-6JL01**	**3SF78 42-6JL11**	**3RG78 42-6JL21**
1350	Emitter	**3SF78 42-6JL00**	**3SF78 42-6JL10**	**3RG78 42-6JL20**
1500	Receiver	**3SF78 42-6JM01**	**3SF78 42-6JM11**	**3RG78 42-6JM21**
1500	Emitter	**3SF78 42-6JM00**	**3SF78 42-6JM10**	**3RG78 42-6JM20**
1650	Receiver	**3SF78 42-6JN01**	**3SF78 42-6JN11**	**3RG78 42-6JN21**
1650	Emitter	**3SF78 42-6JN00**	**3SF78 42-6JN10**	**3RG78 42-6JN20**
1800	Receiver	**3SF78 42-6JP01**	**3SF78 42-6JP11**	**3RG78 42-6JP21**
1800	Emitter	**3SF78 42-6JP00**	**3SF78 42-6JP10**	**3RG78 42-6JP20**
2100	Receiver	**3SF78 42-6JR01**	**3SF78 42-6JR11**	**3RG78 42-6JR21**
2100	Emitter	**3SF78 42-6JR00**	**3SF78 42-6JR10**	**3RG78 42-6JR20**
2400	Receiver	**3SF78 42-6JS01**	**3SF78 42-6JS11**	**3RG78 42-6JS21**
2400	Emitter	**3SF78 42-6JS00**	**3SF78 42-6JS10**	**3RG78 42-6JS20**
2700	Receiver	**3SF78 42-6JT01**	**3SF78 42-6JT11**	**3RG78 42-6JT21**
2700	Emitter	**3SF78 42-6JT00**	**3SF78 42-6JT10**	**3RG78 42-6JT20**
3000	Receiver	**3SF78 42-6JU01**	**3SF78 42-6JU11**	**3RG78 42-6JU21**
3000	Emitter	**3SF78 42-6JU00**	**3SF78 42-6JU10**	**3RG78 42-6JU20**

Light grids[1)]

No. of beams	Beam distance	Type		Range 0.8 m … 18 m	Range 6 m … 60 m
	mm			Order No.	Order No.
4-beam	300	Emitter	►	**3SF78 42-6MH00**	**3SF78 42-6MH50**
4-beam	300	Receiver	►	**3SF78 42-6MH01**	**3SF78 42-6MH51**
3-beam	400	Emitter		**3SF78 42-6PG00**	**3SF78 42-6PG50**
3-beam	400	Receiver		**3SF78 42-6PG01**	**3SF78 42-6PG51**
2-beam	500	Emitter		**3SF78 42-6SE00**	**3SF78 42-6SE50**
2-beam	500	Receiver		**3SF78 42-6SE01**	**3SF78 42-6SE51**

Transceiver with ASIsafe[1)]

No. of beams	Beam distance	Type	Standard device
	mm		Order No.
Range 6.5 m			
2-beam	500	Transceiver	**3SF78 42-6TE01**
Reflecting mirrors for transceivers			**3RG78 48-1TL**

1) For scope of supply see top of page 4/64
► Preferred type, available from stock.

Dimensions

3SF78 42 standard light curtains, 3SF78 42 light grids

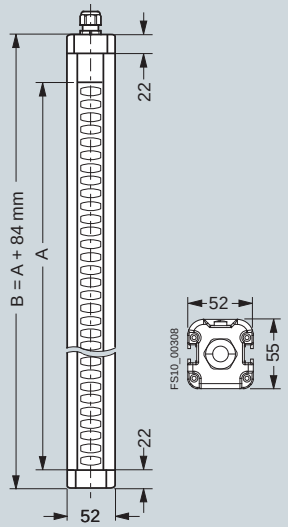

① Pg 9 cover (receiver only, for local interface)

A Protection field height (see Selection and Ordering data)

B Overall length = Protection field height A + 134 mm

3SF78 42 light grids, additional dimensions

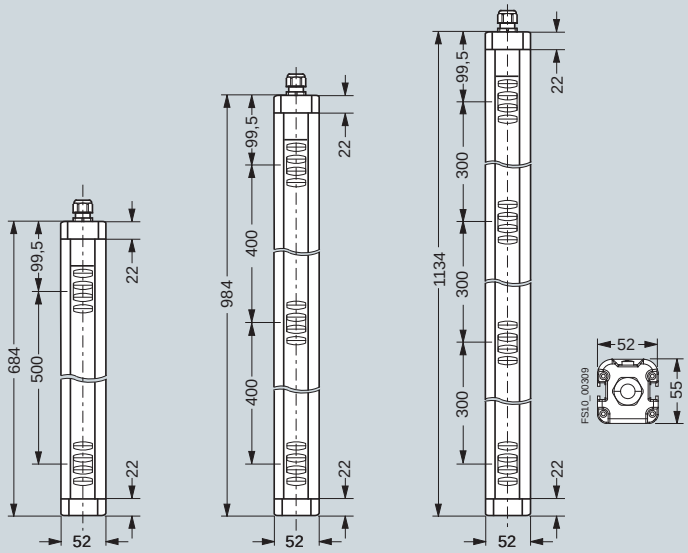

Additional dimensions(mm) for light grids only:

Type	Overall length	Beam distance	Beams
3SF78 42-..M	1134	300	4
3SF78 42-..P	984	400	3
3SF78 42-..S	684	500	2

Overview

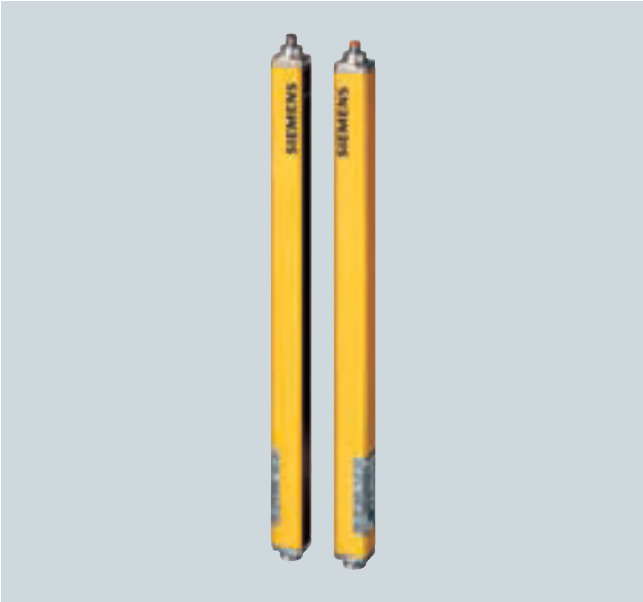

3RG78 46 light curtains with integrated evaluation for type 4 in accordance with IEC/EN 61496-1, -2.

- Resolution: 14, 20, 30, 40 and 90 mm
- Protection field height: 150 mm to 1800 mm
- Two 360° mounting brackets 3RG78 48-2BA each are enclosed with all devices (can also be ordered as accessories see page 4/97)

3RG78 46 (FS420I) program overview

Unit type	Function package	Output	Connection type	Resolution					See page
				14 mm	20 mm	30 mm	40 mm	90 mm	
Light curtains	Standard	Transistor	M12 plug connector	✔	✔	✔	✔	✔	4/72
Accessories									
Electrical connection									
• Connecting cable with M12 connection									4/95
• Connecting cable for the K45F module (see also page 4/94) to connect the 3RG7843 and 3RG7846 series to ASIsafe									4/96
• ASIsafe modules									4/94
Assembly materials									
• Fixing columns, reflecting mirror									4/91f.
• Muting mounting systems									4/92
• Muting accessories									4/95
Laser alignment assistance, diagnostic software									4/93

Technical specifications

Type	3RG78 46
Safety category IEC/EN 61496	Type 4
Detection capability (resolution)	14 mm, 20 mm, 30 mm, 40 mm, 90 mm
Protection field width, range	
• 14 mm resolution	0.5 ... 5 m
• 20 mm resolution	0.7 ... 14 m
• 30 mm resolution	0.5 ... 9 m
• 40 mm resolution	0.9 ... 20 m
• 90 mm resolution	0.9 ... 20 m
Supply voltage U_V (emitter and receiver)	24 V DC ± 20% (external power pack with safe isolation and compensation of 20 ms voltage dip is necessary, minimum 1 A current reserve)
Residual ripple of supply voltage	± 5% within the limits of U_V
Current consumption	
• Emitter	75 mA
• Receiver	110 mA (without external load)
General value for external fuse in the transmitter and receiver supply leads	1 A medium time-lag
Permissible conductor cross-section	
• Emitter	0.25 mm^2
• Receiver	0.14 mm^2
Emitter	Light-emitting diodes according to EN 60825-1:1994+ A1:2002+A:2001
• Class	1
• Wave length	950 nm
• Power	< 50 µW

Type	3RG78 46
Synchronization	Optically between emitter and receiver
Safety class (VDE 106) [1]	III
Ambient temperature	
• Operation	0 ... +55 °C
• Storage	–25 ... +70 °C
Relative humidity	15 ... 95%
Degree of protection	IP65
Signal inputs	
• Emitter pin 4	
- Test input	• Input: Contact or transistor connected to +24 V DC • 0 V or spare = Test • Current load: 20 mA max.
• Receiver pin 1	
- Start/restart key	Input: Contact (NO) connected to 24 V DC, current load: 15 mA max.
- Error/pollution group alarm	Output: pnp: Connected to 24 V DC, 80 mA max.
• Receiver pin 3	
- EDM (contactor control)	• Input: Contact (NC) connected to 0 V • Current load: 15 mA max.
- without EDM	24 V DC connection
• Receiver pin 4	
- with RES	Input: 24 V DC
- without RES	Jumper to pin 1

[1] The circuits connected to the inputs and outputs must comply with the air gaps and creepage distances specified in the applicable standards for safe isolation.

OSSD transistor outputs	2 pnp safety-related transistor outputs, cross-connection monitored, short-circuit-proof		
	Minimum	Typical	Maximum
Operational voltage active high (U_V – 1.6 V) For resistive load I_{rated} = 250 mA	–	22 V	–
Operational voltage, low	-80 V[1]	0 V	+ 2.8 V
Operational current	–	250 mA	–
Leakage current	–	< 5 µA	< 20 µA
Load capacitance	–	–	< 220 nF
Load inductance	–	–	< 2.0 H
Permissible line resistance to load	–	–	< 300 Ω[2]
Permissible line length between receiver and load (with 0.25 mm^2)	–	–	100 m
Test pulse width	30 µs	–	100 µs
Test pulse space	–	–	22 µs
OSSD reactivation time after beam interruption (without RES)	40 ms	100 ms	–
OSSD response time	Depending on number of beams, see operating instructions		

[1] Fast recovery voltage for contactors, otherwise 0 V
[2] Please note further constraints due to cable length and load current.

Application of the EN ISO 13849-1 standard:
2006 "Safety of machinery" for 3RG78 46 light curtains

	Protection field height	PL 13849-1	Category ISO 13849-1	Cat. 954-1	PFH_D	$T_{M/years}$
3RG78 46-... light curtain	900 mm	e	4	4	6.0×10^{-9}	20
3RG78 46-... light curtain	1800 mm	e	4	4	7.3×10^{-9}	20

Explanation

PFH_D = Probability of dangerous failure per hour

PL = Performance level
Discrete level used to specify the ability of safety-related parts of control systems to perform a safety function under foreseeable conditions: From PL "a" (highest probability of failure) to PL "e" (lowest probability of failure).

For further explanations, see the brochure "European machinery directive – implemented easily", Order No. E20001-A230-M103-V1-7600.

Ordering notes

Included in the scope of supply:

3RG78 46 light curtains	
Emitter	3RG78 48-2BA mounting bracket set and emitter insert
Receiver	3RG78 48-2BA mounting bracket set, operating instructions/data sheets
• in addition for 14 mm and 30 mm resolution	3RG78 48-0AH test rod
• in addition for 20 mm resolution	3RG78 48-1CH test rod
• in addition for 40 mm resolution	3RG78 48-1BH test rod

Selection and Ordering data

Light curtains with M12 plug connection[1)]

Protection field height	Type	Resolution 14 mm	Resolution 20 mm	Resolution 30 mm
mm		Order No.	Order No.	Order No.
SIMATIC FS420I				
150	Receiver	–	**3RG78 46-3SC02-0SS1**	**3RG78 46-3SD02-0SS1**
150	Emitter	–	**3RG78 46-3SC02-0SS0**	**3RG78 46-3SD02-0SS0**
225	Receiver	–	**3RG78 46-3SC03-0SS1**	**3RG78 46-3SD03-0SS1**
225	Emitter	–	**3RG78 46-3SC03-0SS0**	**3RG78 46-3SD03-0SS0**
300	Receiver	**3RG7846-3SB04-0SS1**	**3RG78 46-3SC04-0SS1**	**3RG78 46-3SD04-0SS1**
300	Emitter	**3RG7846-3SB04-0SS0**	**3RG78 46-3SC04-0SS0**	**3RG78 46-3SD04-0SS0**
450	Receiver	**3RG78 46-3SB06-0SS1**	**3RG78 46-3SC06-0SS1**	**3RG78 46-3SD06-0SS1**
450	Emitter	**3RG78 46-3SB06-0SS0**	**3RG78 46-3SC06-0SS0**	**3RG78 46-3SD06-0SS0**
600	Receiver	**3RG78 46-3SB08-0SS1**	**3RG78 46-3SC08-0SS1**	**3RG78 46-3SD08-0SS1**
600	Emitter	**3RG78 46-3SB08-0SS0**	**3RG78 46-3SC08-0SS0**	**3RG78 46-3SD08-0SS0**
750	Receiver	**3RG78 46-3SB11-0SS1**	**3RG78 46-3SC11-0SS1**	**3RG78 46-3SD11-0SS1**
750	Emitter	**3RG78 46-3SB11-0SS0**	**3RG78 46-3SC11-0SS0**	**3RG78 46-3SD11-0SS0**
900	Receiver	**3RG78 46-3SB13-0SS1**	**3RG78 46-3SC13-0SS1**	**3RG78 46-3SD13-0SS1**
900	Emitter	**3RG78 46-3SB13-0SS0**	**3RG78 46-3SC13-0SS0**	**3RG78 46-3SD13-0SS0**
1050	Receiver	**3RG78 46-3SB15-0SS1**	**3RG78 46-3SC15-0SS1**	**3RG78 46-3SD15-0SS1**
1050	Emitter	**3RG78 46-3SB15-0SS0**	**3RG78 46-3SC15-0SS0**	**3RG78 46-3SD15-0SS0**
1200	Receiver	**3RG78 46-3SB17-0SS1**	**3RG78 46-3SC17-0SS1**	**3RG78 46-3SD17-0SS1**
1200	Emitter	**3RG78 46-3SB17-0SS0**	**3RG78 46-3SC17-0SS0**	**3RG78 46-3SD17-0SS0**
1350	Receiver	**3RG78 46-3SB20-0SS1**	**3RG78 46-3SC20-0SS1**	**3RG78 46-3SD20-0SS1**
1350	Emitter	**3RG78 46-3SB20-0SS0**	**3RG78 46-3SC20-0SS0**	**3RG78 46-3SD20-0SS0**
1500	Receiver	**3RG78 46-3SB22-0SS1**	**3RG78 46-3SC22-0SS1**	**3RG78 46-3SD22-0SS1**
1500	Emitter	**3RG78 46-3SB22-0SS0**	**3RG78 46-3SC22-0SS0**	**3RG78 46-3SD22-0SS0**
1650	Receiver	**3RG78 46-3SB24-0SS1**	**3RG78 46-3SC24-0SS1**	**3RG78 46-3SD24-0SS1**
1650	Emitter	**3RG78 46-3SB24-0SS0**	**3RG78 46-3SC24-0SS0**	**3RG78 46-3SD24-0SS0**
1800	Receiver	**3RG78 46-3SB26-0SS1**	**3RG78 46-3SC26-0SS1**	**3RG78 46-3SD26-0SS1**
1800	Emitter	**3RG78 46-3SB26-0SS0**	**3RG78 46-3SC26-0SS0**	**3RG78 46-3SD26-0SS0**

1) For scope of supply see top of page 4/71

Protection field height mm	Type	Resolution 40 mm Order No.	Resolution 90 mm Order No.
SIMATIC FS420I			
150	Receiver	**3RG78 46-3SF02-0SS1**	–
150	Emitter	**3RG78 46-3SF02-0SS0**	–
225	Receiver	**3RG78 46-3SF03-0SS1**	–
225	Emitter	**3RG78 46-3SF03-0SS0**	–
300	Receiver	**3RG78 46-3SF04-0SS1**	–
300	Emitter	**3RG78 46-3SF04-0SS0**	–
450	Receiver	**3RG78 46-3SF06-0SS1**	–
450	Emitter	**3RG78 46-3SF06-0SS0**	–
600	Emitter	**3RG78 46-3SF08-0SS0**	**3RG78 46-3SJ08-0SS0**
600	Receiver	**3RG78 46-3SF08-0SS1**	**3RG78 46-3SJ08-0SS1**
750	Receiver	**3RG78 46-3SF11-0SS1**	**3RG78 46-3SJ11-0SS1**
750	Emitter	**3RG78 46-3SF11-0SS0**	**3RG78 46-3SJ11-0SS0**
900	Receiver	**3RG78 46-3SF13-0SS1**	**3RG78 46-3SJ13-0SS1**
900	Emitter	**3RG78 46-3SF13-0SS0**	**3RG78 46-3SJ13-0SS0**
1050	Receiver	**3RG78 46-3SF15-0SS1**	**3RG78 46-3SJ15-0SS1**
1050	Emitter	**3RG78 46-3SF15-0SS0**	**3RG78 46-3SJ15-0SS0**
1200	Receiver	**3RG78 46-3SF17-0SS1**	**3RG78 46-3SJ17-0SS1**
1200	Emitter	**3RG78 46-3SF17-0SS0**	**3RG78 46-3SJ17-0SS0**
1350	Receiver	**3RG78 46-3SF20-0SS1**	**3RG78 46-3SJ20-0SS1**
1350	Emitter	**3RG78 46-3SF20-0SS0**	**3RG78 46-3SJ20-0SS0**
1500	Receiver	**3RG78 46-3SF22-0SS1**	**3RG78 46-3SJ22-0SS1**
1500	Emitter	**3RG78 46-3SF22-0SS0**	**3RG78 46-3SJ22-0SS0**
1650	Receiver	**3RG78 46-3SF24-0SS1**	**3RG78 46-3SJ24-0SS1**
1650	Emitter	**3RG78 46-3SF24-0SS0**	**3RG78 46-3SJ24-0SS0**
1800	Receiver	**3RG78 46-3SF26-0SS1**	**3RG78 46-3SJ26-0SS1**
1800	Emitter	**3RG78 46-3SF26-0SS0**	**3RG78 46-3SJ26-0SS0**

Dimensions

3RG78 46 light curtains with integrated evaluation, Type 4

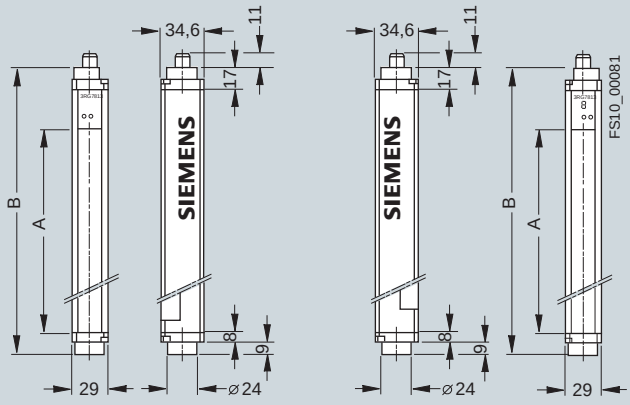

Emitter Receiver

A Protection field height
(see Selection and Ordering data)

B Overall length without connector = Protection field height A + 75.5 mm

SIMATIC FS400 light curtains and light grids

3RG78 43 series, type 2

Integrated evaluation, Standard function package, transistor output, acc. to IEC/EN 61508 (SIL 2)

Overview

3RG78 43 light curtains with integrated startup/restart inhibit and contactor control for type 2 according to IEC/EN 61496-1, -2.

- Developed according to EN 61508 (SIL 2)
- Risk assessment, suitable according to pr EN ISO 13849-1
- Resolution 20, 30, 40 and 90 mm
- Protection field height: 150 mm to 1800 mm

Two 360° mounting brackets 3RG78 48-2BA each are enclosed with all devices (can also be ordered as accessories see page 4/97)

4

3RG78 43 (FS420I) program overview

Unit type	Function package	Output	Connection type	Resolution				See page
				20 mm	30 mm	40 mm	90 mm	
Light curtains	Standard	Transistor	M12 plug connector	✔	✔	✔	✔	4/76
Accessories								
Electrical connection								
• Connecting cable with M12 connection								4/95
• Connecting cable for the K45F module (see also page 4/94) to connect the 3RG78 43 and 3RG78 46 series to ASIsafe								4/96
• ASIsafe modules								4/94
Assembly materials								
• Fixing columns, reflecting mirror								4/91f.
• Muting mounting systems								4/92
• Muting accessories								4/95
Laser alignment assistance, diagnostic software								4/93

Technical specifications

Type	3RG78 43
Safety category EN IEC 61496; SIL2 to IEC 61508	Type 2
Detection capability (resolution)	20 mm, 30 mm, 40 mm, 90 mm
Protection field width, range	
• for 20 mm resolution	0.5 ... 15 m
• for 30 mm resolution	0 ... 8 m
• for 40 mm resolution	0.8 ... 20 m
• for 90 mm resolution	0.8 ... 20 m
Supply voltage U_V (emitter and receiver)	24 V DC ± 20% (external power pack with safe isolation and compensation of 20 ms voltage dip is necessary, min. 1 A current reserve)
Residual ripple of supply voltage	± 5% within the limits of U_V
Current consumption	
• Emitter	45 mA
• Receiver	140 mA (without external load)
General value for external fuse in the transmitter and receiver supply leads	1 A
Permissible conductor cross-section	
• Emitter	0.25 mm²
• Receiver	0.14 mm²

Type	3RG78 43
Emitter	Light-emitting diodes according to EN 60825-1:1994+ A1:2002+A:2001
• Class	1
• Wave length	950 nm
• Pulse duration	7 µs
• Pulse interval	3.1 ms
• Power	< 10 µW
Synchronization	Optically between emitter and receiver
Test repeat time for integrated cyclical test	100 ms
Safety class (VDE 106)	III[1)]
Ambient temperature	
• Operation	0 ... +50 °C
• Storage	–25 ... +70 °C
Relative humidity	15 ... 95%
Degree of protection	IP65
Signal inputs	
• Emitter test input	Input: Contact or transistor connected to +24 V DC, current load: 20 mA max.
• Receiver signal input BA1	Input: Contact or transistor connected to +24 V DC, or connect to GND, current load: 10 mA max.
• Receiver signal input BA2	Input: Contact or transistor connected to +24 V DC, or connect to GND, current load: 10 mA max.

1) The circuits connected to the inputs and outputs must comply with the air gaps and creepage distances specified in the applicable standards for safe isolation.

Transistor outputs Receiver

OSSD transistor outputs	2 pnp safety-related transistor outputs, short-circuit-proof		
	Minimum	Typical	Maximum
Operational voltage active high	U_V - 1.9 V	U_V - 1.0 V	U_V - 0.8 V
Operational voltage, low	–	200 mV	+ 1 V
Operational current	–	–	250 mA
Leakage current	–	< 2 µA[1)]	–
Load capacitance	–	–	< 2.2 µF
Load inductance	–	–	2.0 H
Permissible line resistance to load	–	–	< 50 Ω[2)]
Permissible conductor cross-section: Receiver	–	–	0.14 mm²
Permissible cable lengths between receiver and load	–	–	100 m
Auxiliary pulse width	20 µs	–	230 µs
Auxiliary pulse interval	3.7 ms	–	46 ms
OSSD reactivation time after beam interruption (without RES)	–	100 ms	–
OSSD response time	Depending on number of beams, see operating instructions		

1) If an error occurs (when disconnecting the GND line), the output acts like a 120 kΩ resistance to U_V. A downstream safety PLC may not identify this as a logical "1".
2) Please note further constraints due to cable length and load current.

SIMATIC FS400 light curtains and light grids

3RG78 43 series, type 2

Integrated evaluation, Standard function package, transistor output, acc. to IEC/EN 61508 (SIL 2)

Application of the EN ISO 13849-1 standard: 2006 "Safety of machinery" for 3RG78 43 light curtains

	Protection field height	PL 13849-1	Category ISO 13849-1	Cat. 954-1	PFH_D	$T_{M/years}$
3RG78 43-... light curtain	900 mm	d	2	2	8.18×10^{-8}	20
3RG78 43-... light curtain	1800 mm	d	2	2	8.92×10^{-8}	20

Explanation

PFH_D = Probability of dangerous failure per hour

PL = Performance level
Discrete level used to specify the ability of safety-related parts of control systems to perform a safety function under foreseeable conditions: From PL "a" (highest probability of failure) to PL "e" (lowest probability of failure).

For further explanations, see the brochure "European machinery directive – implemented easily", Order No. E20001-A230-M103-V1.

Ordering notes

Included in the scope of supply:

3RG78 43 light curtain	
Emitter	3RG78 48-2BA mounting bracket set and emitter insert
Receiver	3RG78 48-2BA mounting bracket set, operating instructions/data sheets

4

Selection and Ordering data

Light curtains with M12 plug connection [1)]

Protection field height mm	Type		Resolution 20 mm Order No.		Resolution 30 mm Order No.
SIMATIC FS420I					
150	Receiver		**3RG78 43-3SC02-0SS1**		**3RG78 43-3SD02-0SS1**
150	Emitter		**3RG78 43-3SC02-0SS0**		**3RG78 43-3SD02-0SS0**
225	Receiver		**3RG78 43-3SC03-0SS1**		**3RG78 43-3SD03-0SS1**
225	Emitter		**3RG78 43-3SC03-0SS0**		**3RG78 43-3SD03-0SS0**
300	Receiver		**3RG78 43-3SC04-0SS1**	►	**3RG78 43-3SD04-0SS1**
300	Emitter		**3RG78 43-3SC04-0SS0**	►	**3RG78 43-3SD04-0SS0**
450	Receiver	►	**3RG78 43-3SC06-0SS1**	►	**3RG78 43-3SD06-0SS1**
450	Emitter	►	**3RG78 43-3SC06-0SS0**	►	**3RG78 43-3SD06-0SS0**
600	Receiver		**3RG78 43-3SC08-0SS1**	►	**3RG78 43-3SD08-0SS1**
600	Emitter		**3RG78 43-3SC08-0SS0**	►	**3RG78 43-3SD08-0SS0**
750	Receiver		**3RG78 43-3SC11-0SS1**		**3RG78 43-3SD11-0SS1**
750	Emitter		**3RG78 43-3SC11-0SS0**		**3RG78 43-3SD11-0SS0**
900	Receiver		**3RG78 43-3SC13-0SS1**		**3RG78 43-3SD13-0SS1**
900	Emitter		**3RG78 43-3SC13-0SS0**		**3RG78 43-3SD13-0SS0**
1050	Receiver		**3RG78 43-3SC15-0SS1**		**3RG78 43-3SD15-0SS1**
1050	Emitter		**3RG78 43-3SC15-0SS0**		**3RG78 43-3SD15-0SS0**
1200	Receiver		**3RG78 43-3SC17-0SS1**		**3RG78 43-3SD17-0SS1**
1200	Emitter		**3RG78 43-3SC17-0SS0**		**3RG78 43-3SD17-0SS0**
1350	Receiver		**3RG78 43-3SC20-0SS1**		**3RG78 43-3SD20-0SS1**
1350	Emitter		**3RG78 43-3SC20-0SS0**		**3RG78 43-3SD20-0SS0**
1500	Receiver		**3RG78 43-3SC22-0SS1**		**3RG78 43-3SD22-0SS1**
1500	Emitter		**3RG78 43-3SC22-0SS0**		**3RG78 43-3SD22-0SS0**
1650	Receiver		**3RG78 43-3SC24-0SS1**		**3RG78 43-3SD24-0SS1**
1650	Emitter		**3RG78 43-3SC24-0SS0**		**3RG78 43-3SD24-0SS0**
1800	Receiver		**3RG78 43-3SC26-0SS1**		**3RG78 43-3SD26-0SS1**
1800	Emitter		**3RG78 43-3SC26-0SS0**		**3RG78 43-3SD26-0SS0**

1) For scope of supply see top of page 4/76.
► Preferred type, available from stock.

Protection field height mm	Type	Resolution 40 mm Order No.		Resolution 90 mm Order No.
SIMATIC FS420I				
150	Receiver	**3RG78 43-3SF02-0SS1**		–
150	Emitter	**3RG78 43-3SF02-0SS0**		–
225	Receiver	**3RG78 43-3SF03-0SS1**		–
225	Emitter	**3RG78 43-3SF03-0SS0**		–
300	Receiver	**3RG78 43-3SF04-0SS1**		–
300	Emitter	**3RG78 43-3SF04-0SS0**		–
450	Receiver	**3RG78 43-3SF06-0SS1**	►	**3RG78 43-3SJ06-0SS1**
450	Emitter	**3RG78 43-3SF06-0SS0**	►	**3RG78 43-3SJ06-0SS0**
600	Receiver	**3RG78 43-3SF08-0SS1**		**3RG78 43-3SJ08-0SS1**
600	Emitter	**3RG78 43-3SF08-0SS0**		**3RG78 43-3SJ08-0SS0**
750	Receiver	**3RG78 43-3SF11-0SS1**		**3RG78 43-3SJ11-0SS1**
750	Emitter	**3RG78 43-3SF11-0SS0**		**3RG78 43-3SJ11-0SS0**
900	Receiver	**3RG78 43-3SF13-0SS1**		**3RG78 43-3SJ13-0SS1**
900	Emitter	**3RG78 43-3SF13-0SS0**		**3RG78 43-3SJ13-0SS0**
1050	Receiver	**3RG78 43-3SF15-0SS1**		**3RG78 43-3SJ15-0SS1**
1050	Emitter	**3RG78 43-3SF15-0SS0**		**3RG78 43-3SJ15-0SS0**
1200	Receiver	**3RG78 43-3SF17-0SS1**		**3RG78 43-3SJ17-0SS1**
1200	Emitter	**3RG78 43-3SF17-0SS0**		**3RG78 43-3SJ17-0SS0**
1350	Receiver	**3RG78 43-3SF20-0SS1**		**3RG78 43-3SJ20-0SS1**
1350	Emitter	**3RG78 43-3SF20-0SS0**		**3RG78 43-3SJ20-0SS0**
1500	Receiver	**3RG78 43-3SF22-0SS1**		**3RG78 43-3SJ22-0SS1**
1500	Emitter	**3RG78 43-3SF22-0SS0**		**3RG78 43-3SJ22-0SS0**
1650	Receiver	**3RG78 43-3SF24-0SS1**		**3RG78 43-3SJ24-0SS1**
1650	Emitter	**3RG78 43-3SF24-0SS0**		**3RG78 43-3SJ24-0SS0**
1800	Receiver	**3RG78 43-3SF26-0SS1**		**3RG78 43-3SJ26-0SS1**
1800	Emitter	**3RG78 43-3SF26-0SS0**		**3RG78 43-3SJ26-0SS0**

Dimensions

3RG78 43-3S...-0SS. light curtains

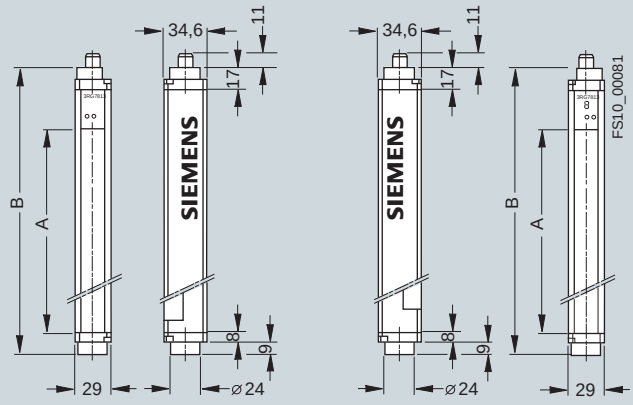

Emitter Receiver

A Protection field height (see Selection and Ordering data)

B Overall length without connector = Protection field height A + 75,5 mm

► Preferred type, available from stock.

3RG78 41 series, type 2

External evaluation
Transistor output

Overview

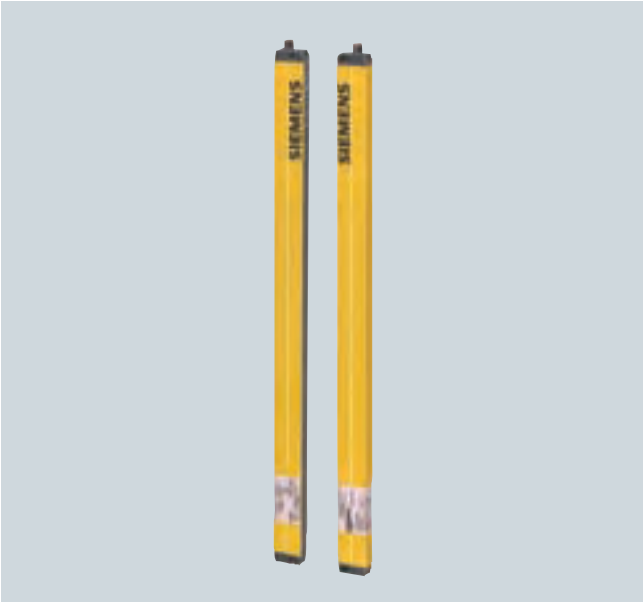

3RG78 41 light curtains for type 2 in accordance with IEC/EN 61496-1, -2.

- Resolution: 30, 55, and 80 mm
- Protection field height: 150 mm to 1800 mm
- Cascading of host and guest devices for greater protection field heights or lengths or for an angular arrangement (optional)

4

3RG78 41 program overview

Unit type	Function package	Output	Connection type	Resolution			See page
				30 mm	55 mm	80 mm	
Light curtains	–	Transistor	M12 plug connector	✔	✔	✔	4/80
Accessories, e.g.							
Electrical connection							
• For the 3RG78 41 series							4/95
Muting accessories							4/95

Technical specifications

Type	3RG78 41
Safety category to EN/IEC 61496-1, -2	Type 2 (testable) in conjunction with an external type 2 monitoring unit
Detection capability (resolution)	30 mm, 55 mm, 80 mm
Protection field height	
• for 30 mm resolution	150 ... 1800 mm
• for 55 mm resolution	300 ... 1800 mm
• for 80 mm resolution	450 ... 1800 mm
Protection field width, sensing field	0.3 ... 6 m
Protection class	I
Supply voltage (emitter and receiver)	24 V DC ± 20% (external power pack with safe isolation and 20 ms voltage power loss ride-through)
Current consumption	
• Emitter	75 mA
• Receiver	75 mA (without external load)
Synchronization between emitter and receiver	Optical; 2 transmission channels can be selected
Ambient temperature	
• Operation	0 ... +55 °C
• Storage	–25 ... +75 °C
Humidity	15 ... 95% (non-condensing)
Degree of protection	IP65
Electrical connection	M12 circular connector, 8-pole
Connecting cable	7-pole, 0.25 mm^2 (enclosed, with sprayed connector), 5 or 15 m long
Vibration resistance	5 *g*, 10 ... 55 Hz to IEC/EN 60068-2-6
Shock resistance	10 *g*, 16 ms to IEC/EN 60068-2-29

Inputs

Type	3RG78 41
Emitter test input	via floating NC contact or pnp output
• No test	+24 V
• Test	0 V or high impedance
Minimum signal duration for test trigger	20 ms
Test execution time	10 ms

Outputs

OSSD safety outputs	pnp output, short circuit proof
Output current $I_{a\,max}$	100 mA
Response time from the protection field interrupt to disconnection of the safety outputs	Increases with higher number of beams (see operating instructions for precise figures)
• for 30 mm resolution	8 ... 29 ms
• for 55 mm resolution	8 ... 19 ms
• for 80 mm resolution	8 ... 15 ms
Reactivation time from release of the protection field to connection of the safety outputs	
• For all resolutions	0.5 ms
• After very brief protection field interrupts	min. 100 ms
Pollution and error message output	pnp output, short circuit proof
Output current, max.	70 mA
Diagnostic interface, receiver	RS-485

Ordering notes

Included in the scope of supply:

3RG78 41 light curtains	
Emitter	Emitter insert
Receiver	Operating instructions

Selection and Ordering data

Light curtains, M12 plug connection[1)]

Protection field height	Type		Standard device	Host device	Guest device
mm			Order No.	Order No.	Order No.
Resolution 30 mm					
150	Receiver		**3RG78 41-3DB01**	**3RG78 41-3DB11**	**3RG78 41-3DB21**
150	Emitter		**3RG78 41-3DB00**	**3RG78 41-3DB10**	**3RG78 41-3DB20**
225	Receiver	►	**3RG78 41-3DC01**	**3RG78 41-3DC11**	**3RG78 41-3DC21**
225	Emitter	►	**3RG78 41-3DC00**	**3RG78 41-3DC10**	**3RG78 41-3DC20**
300	Receiver	►	**3RG78 41-3DD01**	**3RG78 41-3DD11**	**3RG78 41-3DD21**
300	Emitter	►	**3RG78 41-3DD00**	**3RG78 41-3DD10**	**3RG78 41-3DD20**
450	Receiver	►	**3RG78 41-3DE01**	**3RG78 41-3DE11**	**3RG78 41-3DE21**
450	Emitter	►	**3RG78 41-3DE00**	**3RG78 41-3DE10**	**3RG78 41-3DE20**
600	Receiver	►	**3RG78 41-3DF01**	**3RG78 41-3DF11**	**3RG78 41-3DF21**
600	Emitter	►	**3RG78 41-3DF00**	**3RG78 41-3DF10**	**3RG78 41-3DF20**
750	Receiver	►	**3RG78 41-3DG01**	**3RG78 41-3DG11**	**3RG78 41-3DG21**
750	Emitter	►	**3RG78 41-3DG00**	**3RG78 41-3DG10**	**3RG78 41-3DG20**
900	Receiver	►	**3RG78 41-3DH01**	**3RG78 41-3DH11**	**3RG78 41-3DH21**
900	Emitter	►	**3RG78 41-3DH00**	**3RG78 41-3DH10**	**3RG78 41-3DH20**
1050	Receiver		**3RG78 41-3DJ01**	**3RG78 41-3DJ11**	**3RG78 41-3DJ21**
1050	Emitter		**3RG78 41-3DJ00**	**3RG78 41-3DJ10**	**3RG78 41-3DJ20**
1200	Receiver		**3RG78 41-3DK01**	**3RG78 41-3DK11**	**3RG78 41-3DK21**
1200	Emitter		**3RG78 41-3DK00**	**3RG78 41-3DK10**	**3RG78 41-3DK20**
1350	Receiver		**3RG78 41-3DL01**	**3RG78 41-3DL11**	**3RG78 41-3DL21**
1350	Emitter		**3RG78 41-3DL00**	**3RG78 41-3DL10**	**3RG78 41-3DL20**
1500	Receiver		**3RG78 41-3DM01**	**3RG78 41-3DM11**	**3RG78 41-3DM21**
1500	Emitter		**3RG78 41-3DM00**	**3RG78 41-3DM10**	**3RG78 41-3DM20**
1650	Receiver		**3RG78 41-3DN01**	**3RG78 41-3DN11**	**3RG78 41-3DN21**
1650	Emitter		**3RG78 41-3DN00**	**3RG78 41-3DN10**	**3RG78 41-3DN20**
1800	Receiver		**3RG78 41-3DP01**	**3RG78 41-3DP11**	**3RG78 41-3DP21**
1800	Emitter		**3RG78 41-3DP00**	**3RG78 41-3DP10**	**3RG78 41-3DP20**
Resolution 55 mm					
300	Receiver		**3RG78 41-3FD01**	**3RG78 41-3FD11**	**3RG78 41-3FD21**
300	Emitter		**3RG78 41-3FD00**	**3RG78 41-3FD10**	**3RG78 41-3FD20**
450	Receiver		**3RG78 41-3FE01**	**3RG78 41-3FE11**	**3RG78 41-3FE21**
450	Emitter		**3RG78 41-3FE00**	**3RG78 41-3FE10**	**3RG78 41-3FE20**
600	Receiver	►	**3RG78 41-3FF01**	**3RG78 41-3FF11**	**3RG78 41-3FF21**
600	Emitter	►	**3RG78 41-3FF00**	**3RG78 41-3FF10**	**3RG78 41-3FF20**
750	Receiver	►	**3RG78 41-3FG01**	**3RG78 41-3FG11**	**3RG78 41-3FG21**
750	Emitter	►	**3RG78 41-3FG00**	**3RG78 41-3FG10**	**3RG78 41-3FG20**
900	Receiver		**3RG78 41-3FH01**	**3RG78 41-3FH11**	**3RG78 41-3FH21**
900	Emitter		**3RG78 41-3FH00**	**3RG78 41-3FH10**	**3RG78 41-3FH20**
1050	Receiver		**3RG78 41-3FJ01**	**3RG78 41-3FJ11**	**3RG78 41-3FJ21**
1050	Emitter		**3RG78 41-3FJ00**	**3RG78 41-3FJ10**	**3RG78 41-3FJ20**
1200	Receiver		**3RG78 41-3FK01**	**3RG78 41-3FK11**	**3RG78 41-3FK21**
1200	Emitter		**3RG78 41-3FK00**	**3RG78 41-3FK10**	**3RG78 41-3FK20**
1350	Receiver		**3RG78 41-3FL01**	**3RG78 41-3FL11**	**3RG78 41-3FL21**
1350	Emitter		**3RG78 41-3FL00**	**3RG78 41-3FL10**	**3RG78 41-3FL20**

1) For scope of supply see top of page 4/79.
► Preferred type, available from stock.

Protection field height	Type	Standard device	Host device	Guest device
mm		Order No.	Order No.	Order No.
1500	Receiver	**3RG78 41-3FM01**	**3RG78 41-3FM11**	**3RG78 41-3FM21**
1500	Emitter	**3RG78 41-3FM00**	**3RG78 41-3FM10**	**3RG78 41-3FM20**
1650	Receiver	**3RG78 41-3FN01**	**3RG78 41-3FN11**	**3RG78 41-3FN21**
1650	Emitter	**3RG78 41-3FN00**	**3RG78 41-3FN10**	**3RG78 41-3FN20**
1800	Receiver	**3RG78 41-3FP01**	**3RG78 41-3FP11**	**3RG78 41-3FP21**
1800	Emitter	**3RG78 41-3FP00**	**3RG78 41-3FP10**	**3RG78 41-3FP20**
Resolution 80 mm				
450	Receiver	**3RG78 41-3HE01**	**3RG78 41-3HE11**	**3RG78 41-3HE21**
450	Emitter	**3RG78 41-3HE00**	**3RG78 41-3HE10**	**3RG78 41-3HE20**
600	Receiver ►	**3RG78 41-3HF01**	**3RG78 41-3HF11**	**3RG78 41-3HF21**
600	Emitter ►	**3RG78 41-3HF00**	**3RG78 41-3HF10**	**3RG78 41-3HF20**
900	Receiver ►	**3RG78 41-3HH01**	**3RG78 41-3HH11**	**3RG78 41-3HH21**
900	Emitter ►	**3RG78 41-3HH00**	**3RG78 41-3HH10**	**3RG78 41-3HH20**
1200	Receiver	**3RG78 41-3HK01**	**3RG78 41-3HK11**	**3RG78 41-3HK21**
1200	Emitter	**3RG78 41-3HK00**	**3RG78 41-3HK10**	**3RG78 41-3HK20**
1500	Receiver	**3RG78 41-3HM01**	**3RG78 41-3HM11**	**3RG78 41-3HM21**
1500	Emitter	**3RG78 41-3HM00**	**3RG78 41-3HM10**	**3RG78 41-3HM20**
1800	Receiver	**3RG78 41-3HP01**	**3RG78 41-3HP11**	**3RG78 41-3HP21**
1800	Emitter	**3RG78 41-3HP00**	**3RG78 41-3HP10**	**3RG78 41-3HP20**

► Preferred type, available from stock.

Dimensions

3RG78 41-3..0. standard light curtains

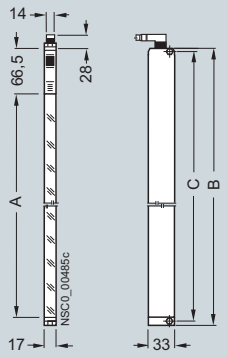

Type	A	B	C
3RG78 41-3.B..	170.5	248.5	238.5
3RG78 41-3.C..	245.5	323.5	313.5
3RG78 41-3.D..	320.5	398.5	388.5
3RG78 41-3.E..	470.5	548.5	538.5
3RG78 41-3.F..	620.5	698.5	688.5
3RG78 41-3.G..	770.5	848.5	838.5
3RG78 41-3.H..	920.5	998.5	988.5
3RG78 41-3.J..	1 070.5	1 148.5	1 138.5
3RG78 41-3.K..	1 220.5	1 298.5	1 288.5
3RG78 41-3.L..	1 370.5	1 448.5	1 438.5
3RG78 41-3.M..	1 520.5	1 598.5	1 588.5
3RG78 41-3.N..	1 670.5	1 748.5	1 738.5
3RG78 41-3.P..	1 820.5	1 898.5	1 888.5

Overview

The 3RG78 47 evaluation units form a flexible product family of interface modules for light curtains and light grids.
The modular design of this series can be used up to type 4 to IEC/EN61496-1,-2.

These units expand the functionality of the light curtains and light grids to include startup/restart inhibit and contact control as well as cycle control and muting depending on the version.

This product family also offers an extensive range of additional functions such as early error warning for the relay contacts, a PC diagnostics function as well as many signaling outputs to a higher-level controller.

Outputs	Relay outputs
OSSD safety outputs	2 safety-related NO contacts
Operational voltage/current switched	60 V DC, 250 V AC, max. 6 A
• Only with extended versions	1 safety-related NC contact, 60 V DC, 250 V AC, max. 6 A, minimum switched current 20 mA
OSSD external fusing	6 A T
OSSD response time of processing unit (without light curtain)	
• With light curtain, type 4, with semiconductor output	22 ms
• With light curtain, type 2	64 ms
• With safety switches	64 ms
OSSD reactivation time	100 ms
OSSD suitable spark quenching through coils of the successor relays	Required

Technical specifications

Standard evaluation units

Type	3RG78 47-4BA
Safety category to EN 954-1	up to 4 (depending on the category of the upstream protective device)
Supply voltage	24 V AC/DC , ±20%
Power consumption	1.5 W (supplied via AODP)
Safety switching outputs (OSSD)	2 relay outputs (NC contact)
Signaling output	Relay output (NC contact)
Continuous current per current path, max.	3 A
Response time	10 ms
Reactivation time	20 ms
Current consumption (inputs B1 and B3)	32 mA each

Type	3RG78 47-4BA
Permissible input resistance	50 Ω
Permissible ambient temperature	
• Operation	0 °C ... +50 °C
• Storage	-25 °C ... +70 °C
Protection class	II
Degree of protection	IP20
Connection method	Screw terminals
Dimensions (W x H x D)	17.5 mm x 99 mm x 113.6 mm
Assembly	on 35 mm mounting rail

Type	3RG78 47-4BB
Safety category to EN 954-1	Category 4
STOP category according to EN 60204-1 (11/ 98)	STOP category 0
Supply voltage	24 V AC/DC, –15 ... +10%
Residual ripple (with DC)	2.4 V_{ss}
Frequency (AC)	50 ... 60 Hz
Power consumption	2.1 W (AC)/1.7 W (DC)
External fusing of supply circuit	1 A slow-action
Output contacts	2 NO, 1 NC $AgSnO_2$, gold-flashed
Switching capacity according to EN 60947-5-1	
• AC-15, 230 V	6 A
• DC-13, 24 V (360 switching cycles/h)	6 A
• DC-13: 24 V (3600 switching cycles/h)	3 A
Max. continuous current per current path	6 A
Contact fusing per current path	6.3 A quick-action or 4 A slow-action
Max. summation current of all current paths	12 A
Mechanical service life	10 x 10^6 switching cycles
Switching frequency	3600 switching cycles/h
ON delay	
• Manual start	70 ms
• Automatic start	230 ms
Returning time, response time	20 ms
Minimum ON period S34, S35	80 ms
Electronic fuse protection	
• Response time	2 sec
• Recovery time	2 sec
Control voltage/current at S11, S22, S31	24 V DC/20 mA
Permissible power input resistance	< 70 Ω
Emitted interference	EN 50081-1, -2
Noise immunity	EN 50082-2
Air gaps and creepage distances according to DIN VDE 0110 (04.97)	4 kV
Operating temperature	–25 ... +55 °C
Degree of protection	
• Enclosure	IP40
• Terminals	IP20
Connection cross-sections	
• Finely-stranded	2 x 0.14 ... 0.75 mm^2
• Finely stranded with end sleeve	2 x 0.25 ... 0.5 mm^2
• Finely stranded with twin end sleeve	2 x 1.5 mm^2
• Solid	1 x 0.14 … 2.5 mm^2
• Finely stranded with end sleeve	2 x 0.25 … 2.5 mm^2

Intelligent evaluation units

Type	3RG78 47
Protection according to EN, IEC 61496-1	Type 4
Safety category to EN 954-1	Category 4
STOP category according to EN 60204-1 (11/ 98)	STOP category 0
Supply voltage	24 V DC ± 20%, external power pack with safe isolation and compensation of 20 ms voltage dip is required
Current consumption	Approximately 200 mA without external load
External fusing (power supply)	2.5 A mT
Connectable safety sensors (extended versions)	1 light curtain, type 4, or up to 2 light curtains, type 2 (all according to IEC 61496) Up to 2 light curtains, type 4, or up to 4 light curtains, type 2 (all according to IEC 61496)
Test outputs T1 and T2, test interval	200 ms
Available functions	
• All versions	Startup/restart inhibit, contractor control, diagnostics
• Versions with cycle control	Protective, single-cycle and two-cycle operation
• Versions with muting function	Sequential muting, parallel muting, parallel double muting (only 3RG78 47-4.G)
Control inputs	
• Contactor control (EDM)	Reset of positive-action contacts of downstream contactors
• Start/restart inhibit (reset)	Floating NO (switch or key switch)
Connection	
• Non-testable muting sensors	Signal level in damped state: active high, +24 V
• Testable muting sensors	Active high, +24 V, plus test pulses T1 or T2
Outputs	
• Muting displays for lamps 24 V, max. 5 W	pnp switching outputs, muting function on, active high, +24 V, max. 200 mA
• Signaling outputs (depending on version)	Light curtain free/interrupted; switching status relay/transistor output; restart inhibit locked/ unlocked; muting function status; muting error; warning defective muting lamp, internal error, etc.
Operating temperature	0 ... +55 °C
Degree of protection	IP20; must be built into control cabinet or housing with degree of protection of at least IP54
Installation	Mounting on 35-mm mounting rail
Connection method	Pluggable, coded screw terminals up to 2.5 mm^2

Selection and Ordering data

	Version		Relay output Order No.
Evaluation units			
 3RG78 25-1CB1	**Type 2 and 4 to EN 954-1**		
	Relay module, dual-channel, for AOPDs with 2 OSSDs and contactor control	►	**3RG7847-4BA**
	Type 2 to EN 954-1		
	Standard, restart inhibit, contactor control (suited for 3RG78 41 light curtains and 3RG78 23 light barriers)	►	**3RG78 25-1CB1**
 3RG78 47-4BB	**Type 4 to EN 954-1** [1]		
	Standard, restart inhibit, contactor control (no diagnostic and test function, for category 4 light curtains and grids and for category 2 3RG78 43 light curtains only)	►	**3RG78 47-4BB**
 3RG78 47-4BE	Standard, restart inhibit, contactor control	►	**3RG78 47-4BD**
	Standard, restart inhibit, contactor control, expanded version [2]	►	**3RG78 47-4BE**
 3RG78 47-4BF	Muting function, restart inhibit, contactor control	►	**3RG78 47-4BF**
	Muting function, restart inhibit, contactor control, expanded version [2]	►	**3RG78 47-4BG**
	Muting function, dual-channel, with UL certification, CSA certification requested		**3RG78 47-5BF**
	Muting function, with UL certification, CSA certification requested, expanded version [2]		**3RG78 47-5BG**
 3RG78 47-4BJ	Cycle control, restart inhibit, contactor control		**3RG78 47-4BH**
	Cycle control, restart inhibit, contactor control, expanded version [2]		**3RG78 47-4BJ**
 3RG78 47-4BL	Muting function and cycle control, restart inhibit, contactor control		**3RG78 47-4BK**
	Muting function and cycle control, restart inhibit, contactor control, expanded version [2]		**3RG78 47-4BL**

[1] The electronic 3TK28 41 safety combination can also be used for category 4 light curtains and grids.
[2] Up to two type 4 light curtains or up to four type 2 light curtains or two safety switches (e.g. emergency stop) can be connected to the expanded version.
► Preferred type, available from stock.

	Version	Order No.
Diagnostics software for evaluation units		
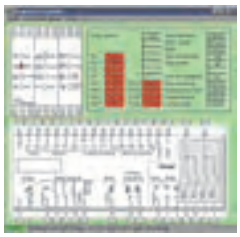	**Diagnostics software for evaluation units,** with PC cable	► H **3RG78 48-4AC**

► Preferred type, available from stock.
H: Subject to export regulations AL = N and ECCN = 5D992B1.

Dimensions

3RG78 47-4BA

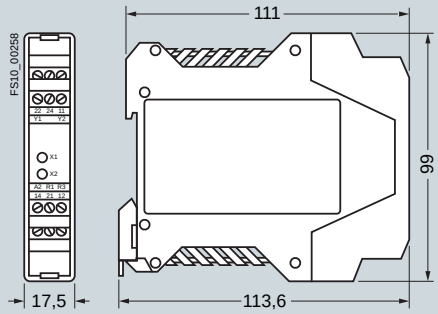

3RG78 47-4BB

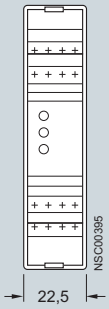

3RG78 47-4.D/E/H/J

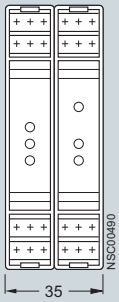

3RG78 47-4.F/G/K/L

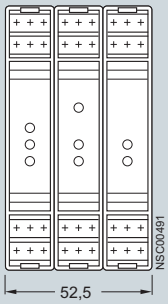

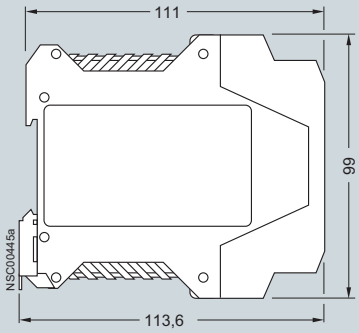

3RG78 47-5BG/DG

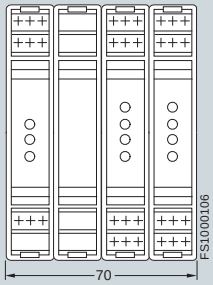

3RG78 47-5BF/DF

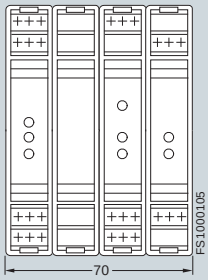

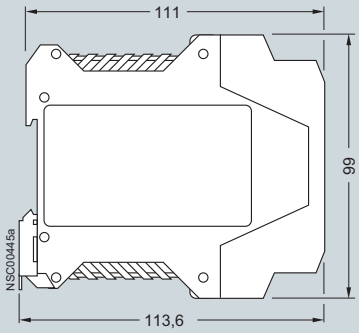

Schematics

Connecting 3RG78 43 light curtains to the 3RG78 47-4BA relay module

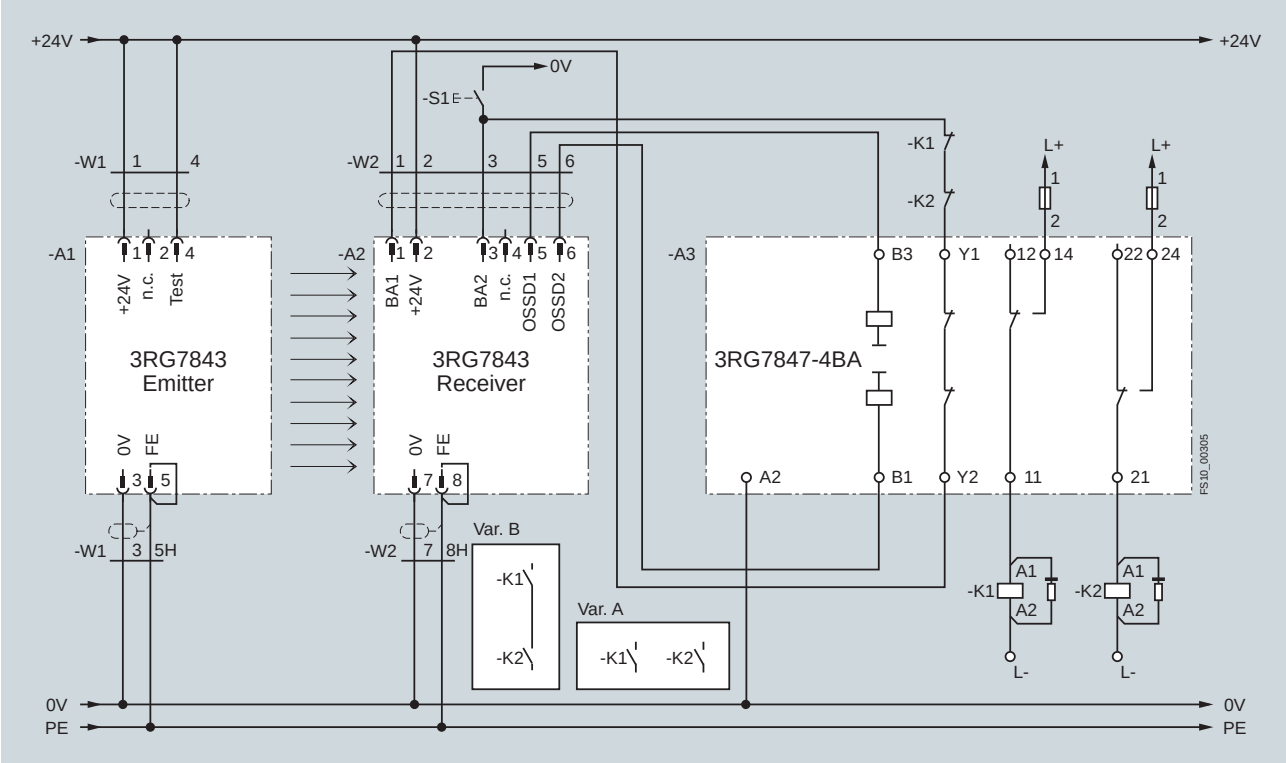

Connecting 3RG78 41 light curtains to the 3RG7825-1CB1 evaluation unit

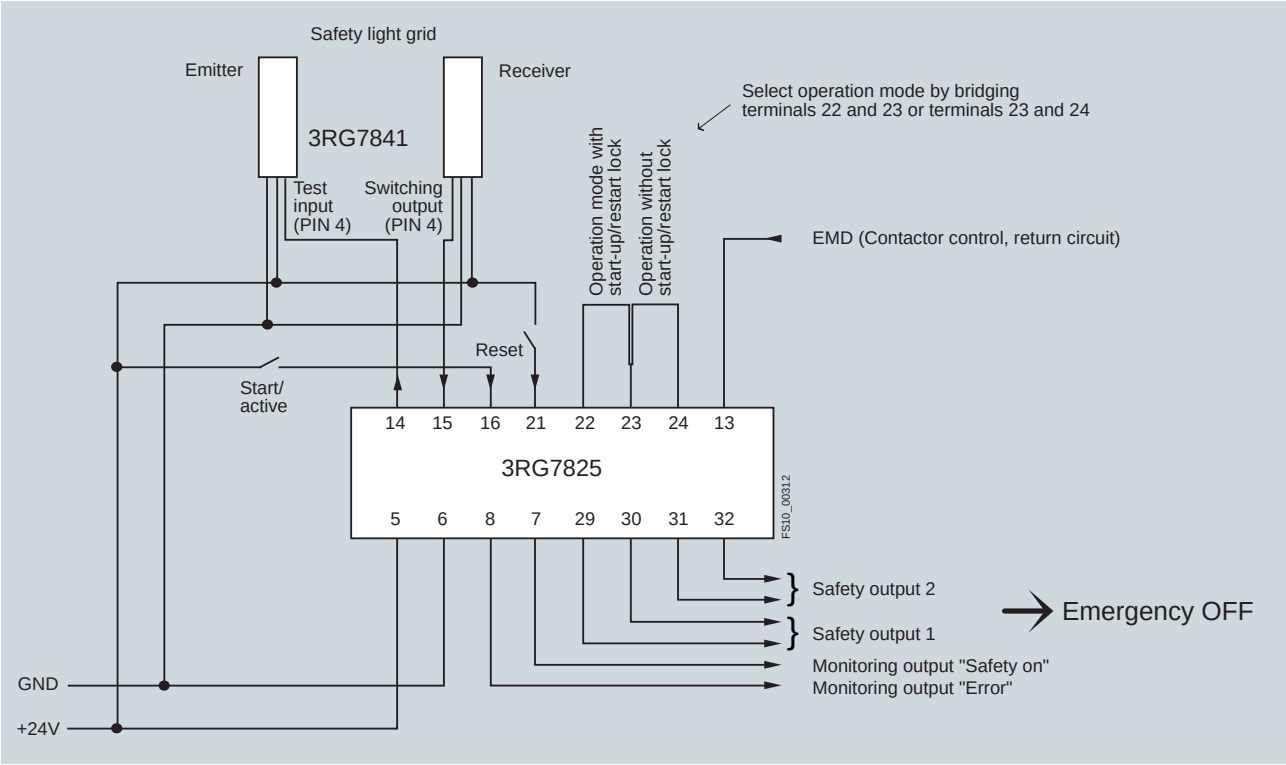

Connecting 3RG78 46 light curtains to the 3RG78 47-4BA relay module

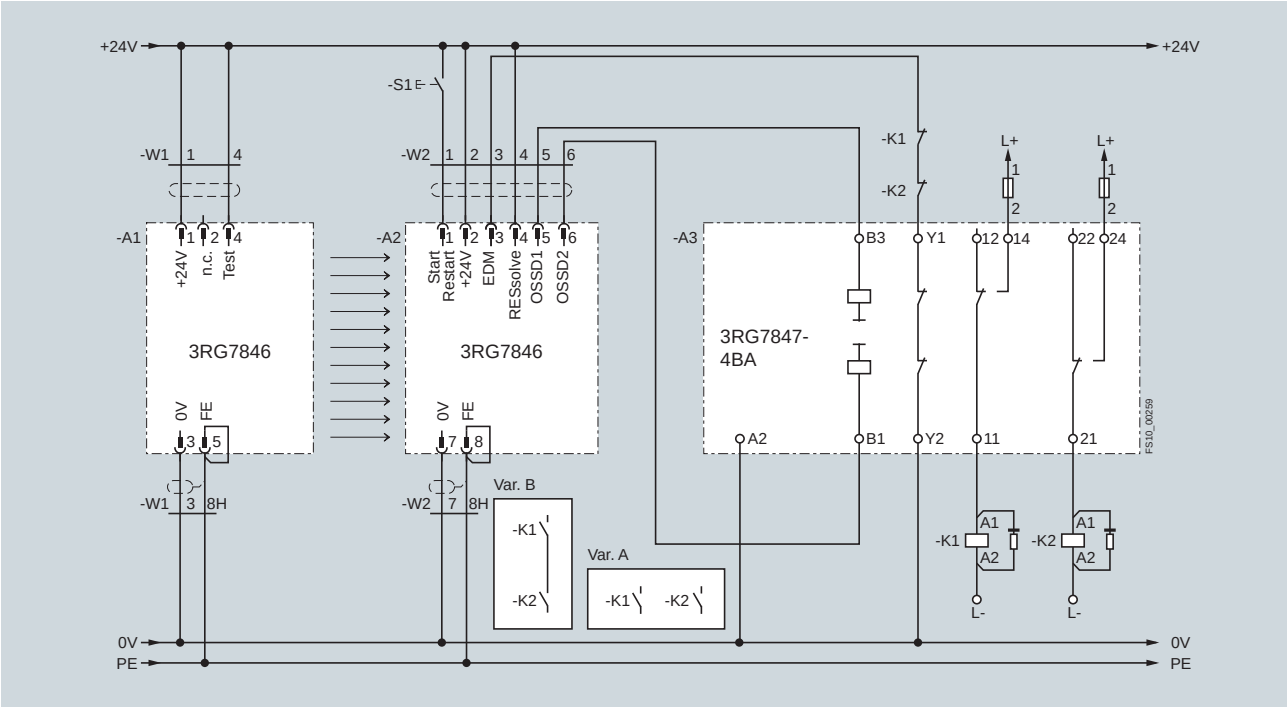

Connecting 3RG78 45 light curtains, light grids and transceivers to the standard 3RG78 47-4BB evaluation unit

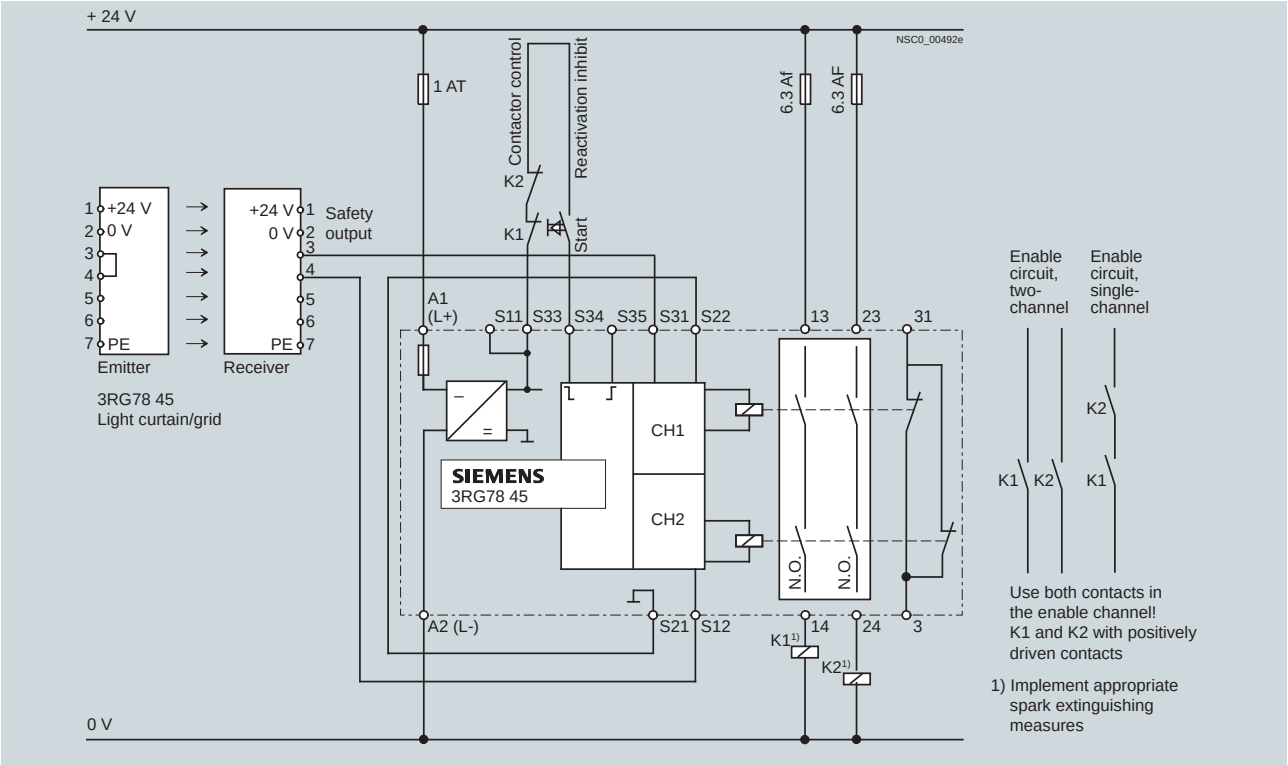

Connecting 3RG78 34 laser scanners to the 3RG78 47-4BB evaluation unit

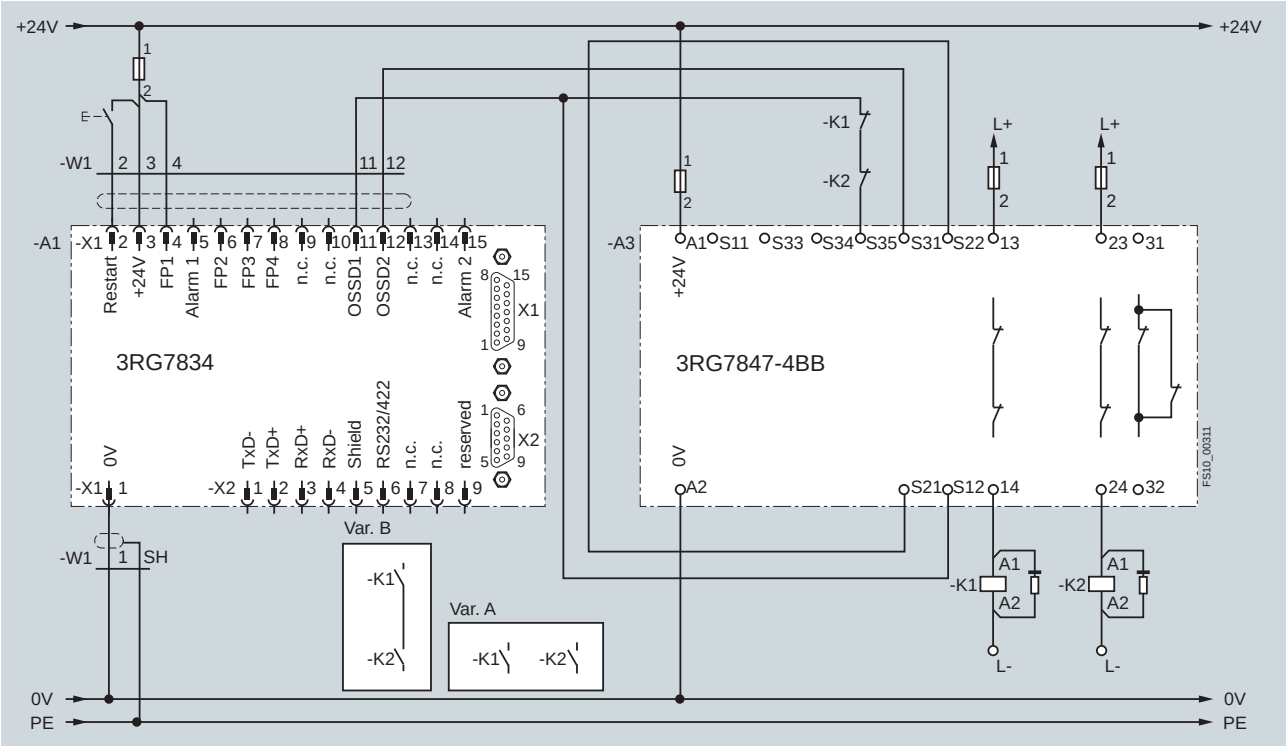

Connecting 3RG78 41 light curtains to the standard 3RG78 47-4BD evaluation unit

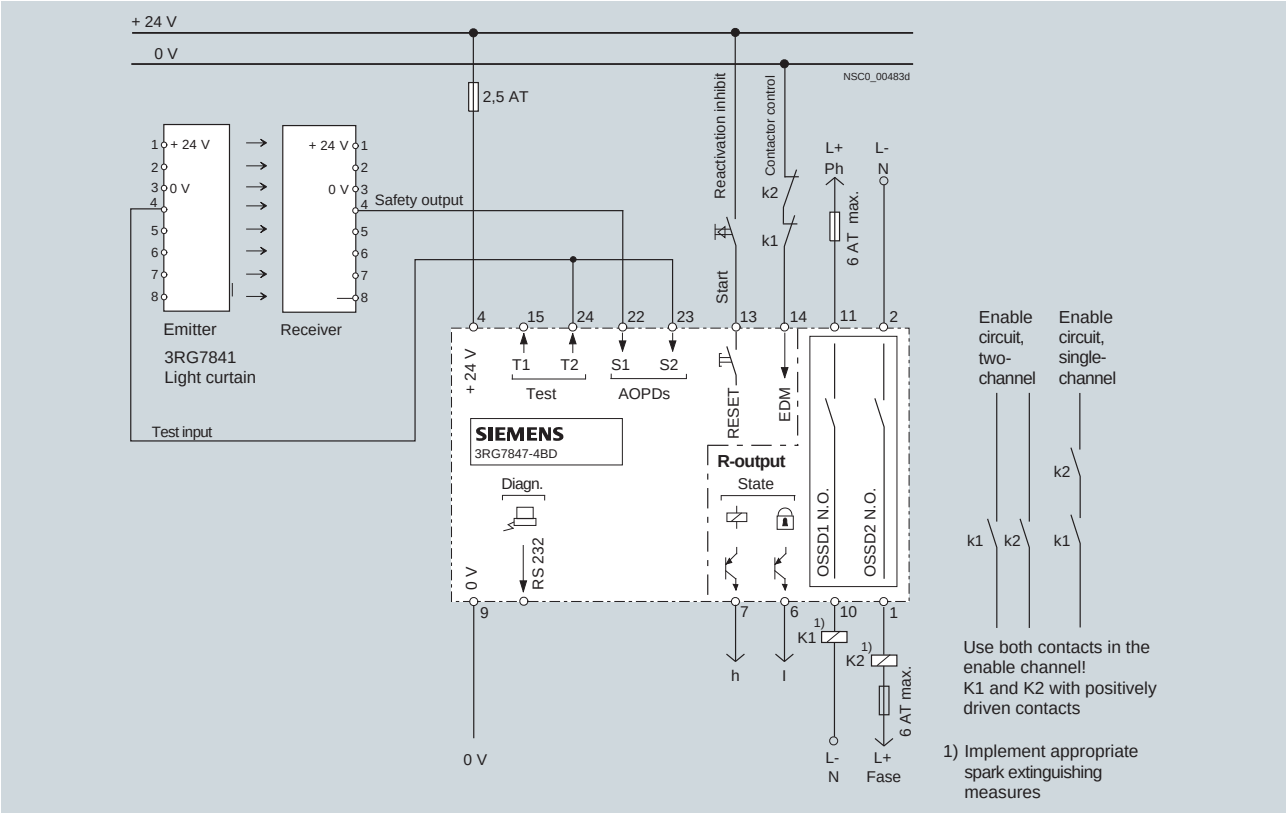

Connecting 3RG78 45 light curtains, light grids and transceivers to the 3RG78 47-4BF/3RG78 47-5BF evaluation unit with integrated muting function

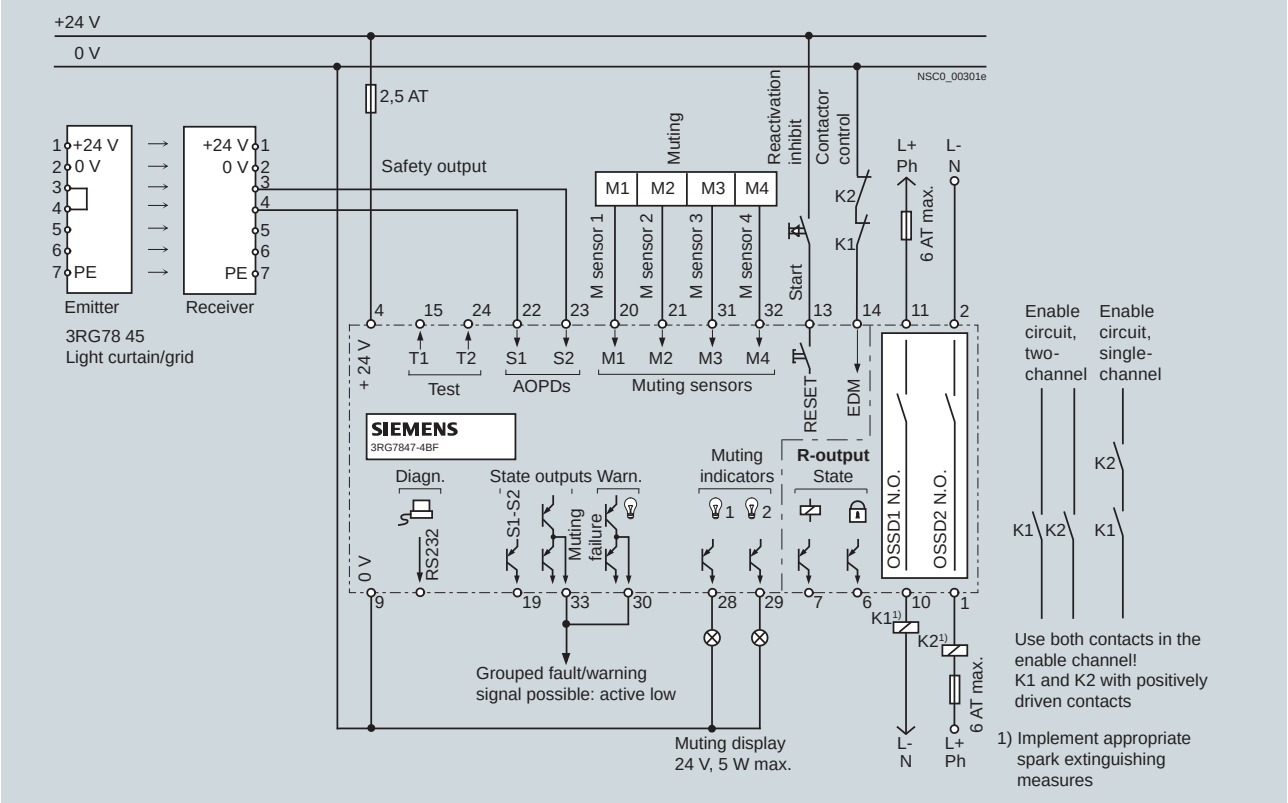

Connection of 3RG78 45 light curtains, light grids and transceivers to the 3RG7847-4BH evaluation unit with sequence control system

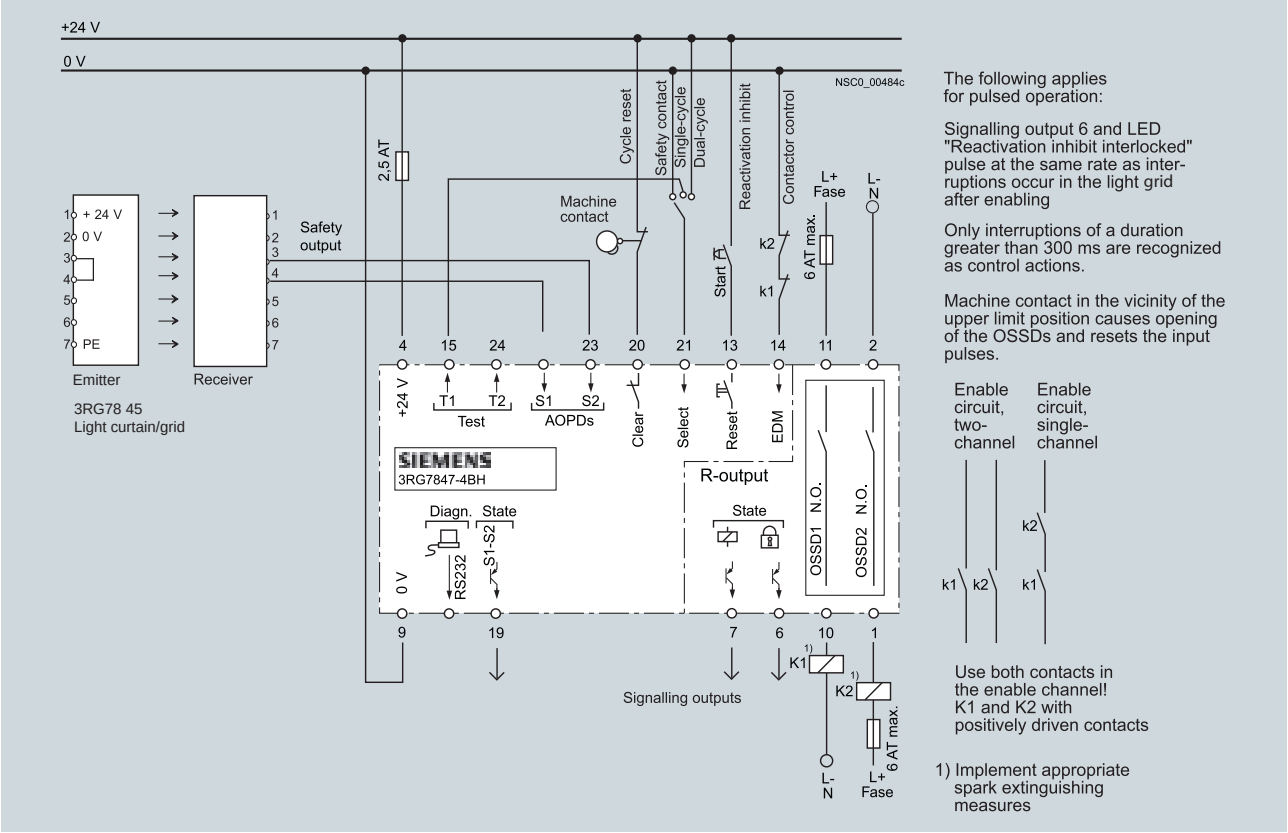

Connecting 3RG7834 laser scanners to a SafetyPLC

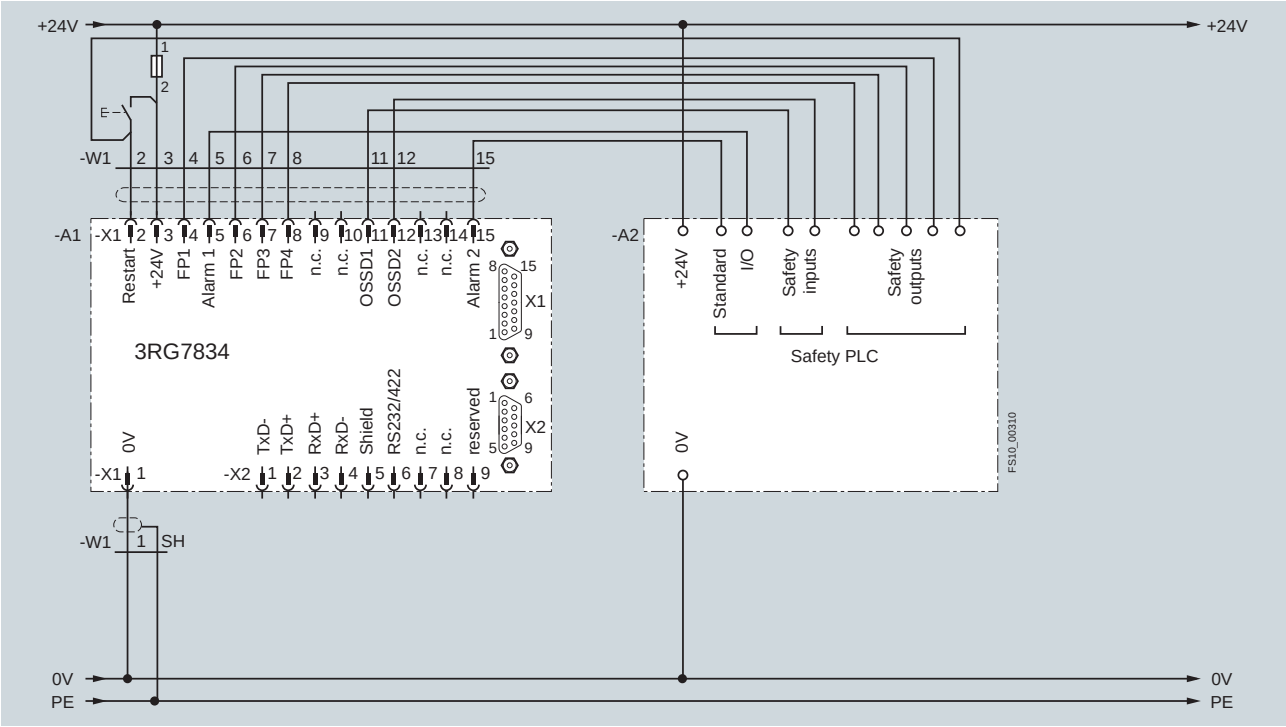

Overview

To facilitate installation, alignment, commissioning and trouble-shooting, a practical accessories package containing mounting columns, reflecting mirror columns, reflecting mirrors, mounting supports, protective disks and laser alignment tools is available.

In addition, PC software can be used to visualize and record the function of the light curtains as well as the evaluation units.

Selection and Ordering data

	Length mm		Order No.
Mounting columns			
	Suited for the 3RG78 43, 3RG78 44, 3RG78 45, 3RG78 46 as well as 3SF78 42 and 3SF78 44 series		
	1060		**3RG78 48-1CL**
	1360		**3RG78 48-1CP**
	1660		**3RG78 48-1CR**
	1960		**3RG78 48-1CU**
Reflecting mirror for light curtains			
	The 3RG78 43, 3RG78 44, 3RG78 45, 3RG78 46 as well as 3SF78 42 and 3SF78 44 series		
	Reflecting mirror		
	210		**3RG78 48-1DC**
	285		**3RG78 48-1DD**
	360		**3RG78 48-1DL**
	510		**3RG78 48-1DM**
	660		**3RG78 48-1DN**
	810		**3RG78 48-1DP**
	960		**3RG78 48-1DR**
	1110		**3RG78 48-1DU**
	1260		**3RG78 48-1DE**
	1410		**3RG78 48-1DF**
	1560		**3RG78 48-1DG**
	1710		**3RG78 48-1DH**
	1860		**3RG78 48-1DK**
	**Reflecting mirror columns**		
	1060	►	**3RG78 48-0DL**
	1360	►	**3RG78 48-0DP**
	1660		**3RG78 48-0DR**
	1960		**3RG78 48-0DU**
Reflecting mirror columns for light grids			
	The 3RG78 44, 3RG78 45 as well as 3SF78 42 and 3SF78 44 series		
	**Adjustable separate mirrors**		
	1060, 2-beam	►	**3RG78 48-0FL**
	1360, 3-beam	►	**3RG78 48-0FP**
	1360, 4-beam	►	**3RG78 48-0FR**

► Preferred type, available from stock.

	Length	Order No.
Protective disks		
	The protective disks can prevent damage to the light curtains and light grids. The protective disks can be easily replaced, if necessary.	
	For the 3RG78 42, 3RG78 44, 3RG78 45, 3SF78 42 and 3SF78 44 series	
	For protection field height	
	300 mm	**3RG78 48-4AA**
	450 mm	**3RG78 48-4BA**
	600 mm	**3RG78 48-4CA**
	750 mm	**3RG78 48-4DA**
	900 mm	**3RG78 48-4FA**
	1050 mm	**3RG78 48-4GA**
	1200 mm	**3RG78 48-4HA**
	1350 mm	**3RG78 48-4KA**
	1500 mm	**3RG78 48-4LA**
	1650 mm	**3RG78 48-4MA**
	1800 mm	**3RG78 48-4NA**
	Holder set with 2 disk clamps for protective disks for protection field heights up to 900 mm	**3RG78 48-4SA**
	Holder set with 3 disk clamps for protective disks for protection field heights of 900 mm and above	**3RG78 48-4TA**
	For the 3RG78 43 and 3RG78 46 series	
	For protection field height	
	300 mm	**3RG78 48-4DS**
	450 mm	**3RG78 48-4FS**
	600 mm	**3RG78 48-4GS**
	750 mm	**3RG78 48-4HS**
	900 mm	**3RG78 48-4KS**
	1050 mm	**3RG78 48-4LS**
	1200 mm	**3RG78 48-4MS**
	1350 mm	**3RG78 48-4NS**
	1500 mm	**3RG78 48-4SS**
	1650 mm	**3RG78 48-4TS**
	1800 mm	**3RG78 48-4US**
	Holder set with 2 disk clamps for protective disks for protection field heights up to 900 mm	**3RG78 48-4BS**
	Holder set with 3 disk clamps for protective disks for protection field heights of 900 mm and above	**3RG78 48-4CS**

	Type		Order No.
Assembly materials			
	**Bracket, hinged with vibration damping** (incl. 2 screws and 2 sliding blocks)	►	**3RG78 48-0BB**
	**Standard holding bracket kit** (1 set = 2 units, incl. screws)	►	**3RG78 48-0AB**
	Sliding blocks (1 set = 2 units), M6	►	**3RG78 48-0AC**
	Muting mounting system, total length 1000 mm with two 12 mm circular bars for light barrier mounting systems (see page 4/99)		**3RG78 48-2AF**
	Muting mounting system, total length 1000 mm with 2 reflectors		**3RG78 48-2LF**

► Preferred type, available from stock.

	Type		Order No.
	Muting mounting system for sequential muting, total length 1000 mm with four 12 mm circular bars for light barrier mounting systems (see page 4/99)		**3RG784 8-2DF**
	Muting mounting system for sequential muting, total length 1000 mm with 4 reflectors		**3RG78 48-2KF**
	Muting mounting system, total length 350 mm with two 12 mm circular bars for light barrier mounting systems (see page 4/99)		**3RG78 48-2GF**
	Muting mounting system to bolt mount directly to the unit for 2 sensors with angular circular bars for light barrier mounting systems (see page 4/99)		**3RG78 48-2HF**
	Holding bar for mounting to muting mounting system, diameter 12 mm, length 200 mm	►	**3RX7 315**
	Holding bar for mounting to muting mounting system, diameter 12 mm, length 300 mm	►	**3RX7 316**
	Holding plate to hold sensor, mounting on 12 mm circular bar for sensor holding system	►	**3RX7 326**
	Mounting base with 12 mm receptacle for fixing system	►	**3RX7 322**
Keys			
	**Safety key** for teach-in		**3RG78 48-2AH**
Laser alignment assistance			
	Standard version for slot mounting		**3RG78 48-1AB**
	For installation with fixing columns		**3RG78 48-1AG**
	For light barriers and laser scanners		**3RG78 48-1AP**
Test rods			
	With 14 mm and 30 mm resolution	►	**3RG78 48-0AH**
	20 mm test rod		**3RG78 48-1CH**
	30 mm test rod	►	**3RG78 48-0AH**
	40 mm test rod		**3RG78 48-1BH**
Diagnostics software			
	for evaluation units, including PC cable	► H	**3RG78 48-4AC**
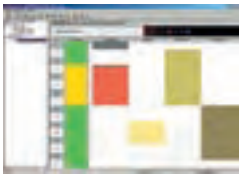	SafetyLab diagnostics and parameterization software with PC cable C	H	**3RG78 48-2SL**
	PC connecting lead, including connector, 9-pole with optical interface	►	**3RG78 38-1DC**

H: Subject to export regulations AL = N and ECCN = 5D992B1
► Preferred type, available from stock.

	Type	Length m	Poles		Order No.
ASIsafe					
	ASIsafe module for 3RG78 43 type 2 light curtains			► B	**3RK1205-0BQ21-0AA3**
	ASIsafe module for 3RG78 46 type 4 light curtains			►	**3RK1205-0BQ24-0AA3**
	ASIsafe adapter for 3SF78 44 series receiver for use with 3RG78 38-1EA or 3RG78 38-1EB 5-pole connecting cables, for bus connection and 24 V power supply			►	**3RG78 38-1DG**
	ASIsafe adapter for 3SF78 4 emitter and M12 bus terminal receiver for ASIsafe flat cable			►	**3RX98 01-0AA00**
	Connecting cable for 3RG78 38-1DG ASIsafe adapter M12 ASIsafe adapter for 3SF78 44 M12 receiver	1	5-pole	►	**3RG78 38-1EA**
	Connecting cable for 3RG78 38-1DG ASIsafe adapter M12 ASIsafe adapter for 3SF78 44 M12 receiver	2	5-pole	►	**3RG78 38-1EB**
Cables and cable plugs of the Hirschmann type for the 3RG78 44 series					
	Cable plug		12-pole		**3RG78 48-2DA**
	Angular cable socket		12-pole		**3RG78 48-2DB**
	Cable for machine interface, straight plug	10			**3RG78 48-2CK**
	Cable for machine interface, straight plug	25		►	**3RG78 48-2DK**
	Cable for machine interface, straight plug	50		►	**3RG78 48-2EK**
Brad Harrison (MIN series) cable for 3RG78 45 and 3RG78 44 light curtains and light grids					
Notice: Primarily for the NAFTA market.	• Connecting cable for 3RG78 44 and 3RG78 45 receivers	4	7-pole	►	**3RG78 48-0DB01**
	• Connecting cable for 3RG78 45 emitter	4	5-pole	►	**3RG78 48-0DB00**
	• Connecting cable for 3RG7844 and 3RG7845 receivers	12	7-pole	►	**3RG78 48-0KB01**
	• Connecting cable for 3RG78 45 emitter	12	5-pole	►	**3RG78 48-0KB00**
	• Connecting cable for 3RG78 44 and 3RG78 45 receivers	20	7-pole	►	**3RG78 48-0LB01**
	• Connecting cable for 3RG78 45 emitter	20	5-pole	►	**3RG78 48-0LB00**
Cable and cable boxes for the 3RG78 44 and 3SF78 44 series					
	Cable for local connection, with M12 angular connector, 8-pole	3		►	**3RG78 48-2AK**
	Cable for local connection, with M12 angular connector, 8-pole	10		►	**3RG78 48-2BK**
	External local connection box, with 6 M12 sockets and cable; for connecting the muting sensors and the muting lamp	0.5			**3RG78 48-2AB**
	Connecting cable, twisted (connecting pin 2 to plug pin 4), M12 angle plug – M12 connector	1.5	8-pole		**3RG78 48-2FK**
	Connecting cable, twisted (connecting pin 2 to plug pin 4), M12 plug – M12 connector	1.5	8-pole		**3RG78 48-2GK**
	Connecting cable, twisted (connecting pin 2 to plug pin 4), M12 angle plug – M12 angular connector	1.5	8-pole		**3RG78 48-2HK**

B: Subject to export regulations AL = N and ECCN = EAR99.
► Preferred type, available from stock.

	Type	Rated voltage		Order No.
Muting lamp and accessories				
	**Continuous light element,** clear	AC/DC 24 ... 230 V	►	**8WD42 00-1AE**
	**Connecting element with end cover** for conduit, floor and angled installation		►	**8WD42 08-0AA**
	Conduit, single, length 100 mm		►	**8WD42 08-0EF**
	**Foot, single,** in plastic, for floor installation		►	**8WD42 08-0DE**
	**Bracket for wall mounting**		►	**8WD42 08-0CA**
	**Incandescent lamp, 5W,** BA 15d base	AC/DC 24	►	**8WD43 28-1XX**

	Length	Type		Order No.
Safety and mounting profiles for 3RG78 41 light curtains				
	150 mm		►	**3RG78 48-0GB**
	225 mm		►	**3RG78 48-0GC**
	300 mm		►	**3RG78 48-0GD**
	450 mm		►	**3RG78 48-0GE**
	600 mm		►	**3RG78 48-0GF**
	750 mm		►	**3RG78 48-0GG**
	900 mm		►	**3RG78 48-0GH**
	1050 mm			**3RG78 48-0GJ**
	1200 mm			**3RG78 48-0GK**
	1350 mm			**3RG78 48-0GL**
	1500 mm			**3RG78 48-0GM**
	1650 mm			**3RG78 48-0GN**
	1800 mm			**3RG78 48-0GP**
Connecting cable with M12 socket for 3RG78 41 light curtains				
	5 m	straight	►	**3RG78 48-1BA**
	5 m	angled	►	**3RG78 48-1BC**
	15 m	straight	►	**3RG78 48-1BD**
	15 m	angled	►	**3RG78 48-1BE**
Connecting cable with M12 plug-in connector for 3RG78 43, 3RG78 44, 3RG78 45, 3RG7846 and 3SF78 44 series emitter light curtains				
5-pole, shielded	5 m	straight	►	**3RG78 48-2EA**
5-pole, shielded	5 m	angled	►	**3RG78 48-2EB**
5-pole, shielded	10 m	straight	►	**3RG78 48-2EC**
5-pole, shielded	10 m	angled	►	**3RG78 48-2ED**
5-pole, shielded	15 m	straight	►	**3RG78 48-2EE**
5-pole, shielded	15 m	angled	►	**3RG78 48-2EF**
5-pole, shielded	30 m	straight	►	**3RG78 48-2EM**
5-pole, shielded	30 m	angled	►	**3RG78 48-2EN**

► Preferred type, available from stock.

M12 socket	Connector, connecting cable	Length m		Order No.
Connecting cable with M12 plug-in connector for 3RG78 43, 3RG78 44, 3RG78 45 and 3RG78 46 series receiver light curtains				
8-pole, shielded	straight	5	►	**3RG78 48-2CA**
8-pole, shielded	angled	5	►	**3RG78 48-2CB**
8-pole, shielded	straight	10	►	**3RG78 48-2CC**
8-pole, shielded	angled	10	►	**3RG78 48-2CD**
8-pole, shielded	straight	15	►	**3RG78 48-2CE**
8-pole, shielded	angled	15	►	**3RG78 48-2CF**
8-pole, shielded	straight	30	►	**3RG78 48-2CM**
8-pole, shielded	angled	30	►	**3RG78 48-2CN**
Connection cable to connect to ASIsafe with a straight connector and straight/angular M12 socket for the 3RG78 43 and 3RG78 46 emitter light curtains				
straight	5-pole, shielded	5		**3RG78 48-3EA**
angled	5-pole, shielded	5		**3RG78 48-3EB**
straight	5-pole, shielded	10		**3RG78 48-3EC**
angled	5-pole, shielded	10		**3RG78 48-3ED**
straight	5-pole, shielded	15		**3RG78 48-3EE**
angled	5-pole, shielded	15		**3RG78 48-3EF**
Connection cable to connect to ASIsafe with a straight connector and straight/angular M12 socket for the 3RG78 43 and 3RG78 46 receiver light curtains				
straight	8-pole, shielded	5		**3RG78 48-3CA**
angled	8-pole, shielded	5		**3RG78 48-3CB**
straight	8-pole, shielded	10		**3RG78 48-3CC**
angled	8-pole, shielded	10		**3RG78 48-3CD**
straight	8-pole, shielded	15		**3RG78 48-3CE**
angled	8-pole, shielded	15		**3RG78 48-3CF**

► Preferred type, available from stock.

	Designation	Order No.
Mounting hardware for 3RG78 43 and 3RG 78 46 light curtains		
	360° bracket	**3RG78 48-2BA**
	L bracket	**3RG78 48-2BB**
	Z bracket	**3RG78 48-2BC**
	360° support set, comprising two 360° supports	**3RG78 48-2BD**
	L bracket set, comprising two L brackets	**3RG78 48-2BE**
	Z bracket set, comprising two Z brackets	**3RG78 48-2BF**
	Support, swivel-mounted, with vibration damping ►	**3RG78 48-0BB**

► Preferred type, available from stock.

Dimensions

3RG78 48-0C.
reflecting mirror columns

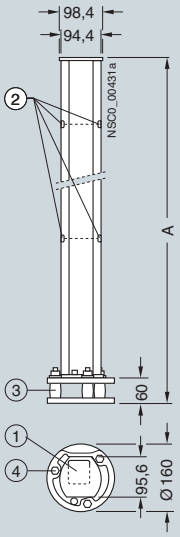

3RG78 48-0D., 3RG78 48-0F.
mounting columns

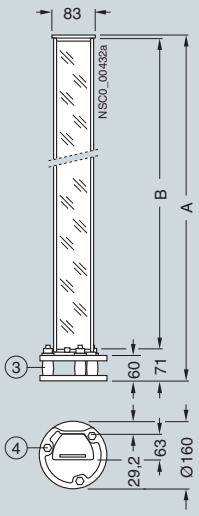

Type	A	B
3RG78 48-0.L	1060	974
3RG78 48-0.P	1360	1274
3RG78 48-0.R	1660	1574
3RG78 48-0.U	1960	1874

① light curtain
② 8 bore holes, diameter = 16 mm
③ plastic spring elements with automatic return mechanism
④ 3 bore holes in base for dowels, diameter = 10 mm, depth = 80 mm

3RG78 48-0AB standard mounting bracket
(included in the scope of supply)

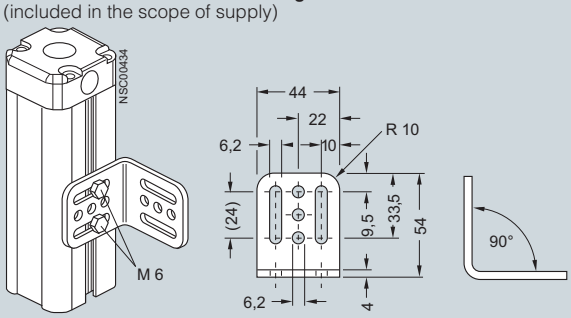

3RG78 48-0BB support,
swivel-mounted, with vibration damping

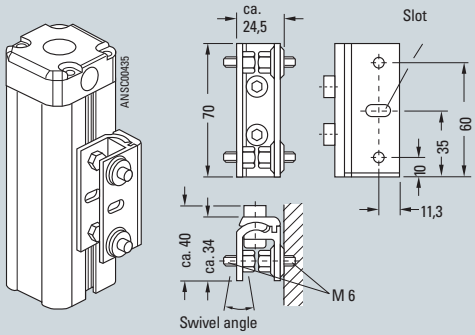

Muting mounting system

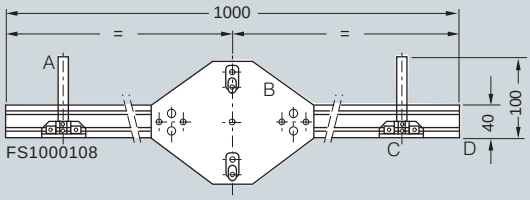

A V2A circular bar 12 x 100 mm
B Fixing plate
C Aluminum profile
D Cover

3RG78 48-2GF muting mounting system, length 350 mm with 2 circular bars

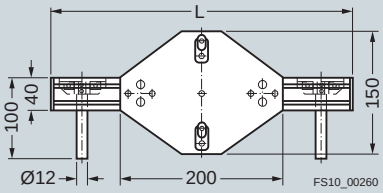

3RG78 48-2DF muting mounting system for sequential muting, total length 1000 mm with four 12 mm circular bars

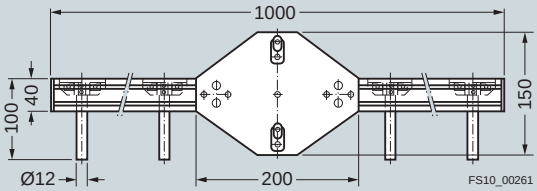

3RG78 48-2KF muting mounting system for sequential muting, length 1000 mm with four reflectors

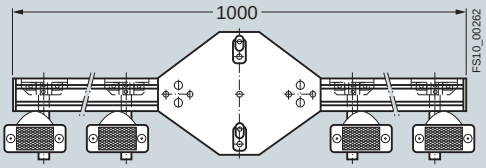

3RG78 48-2BB L-bracket

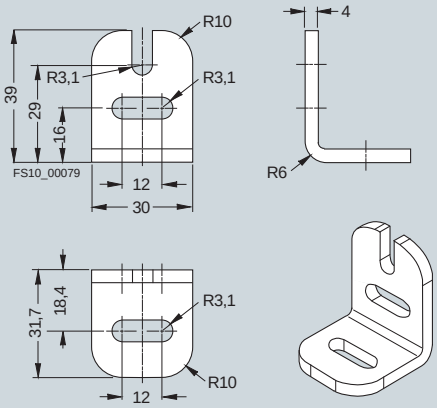

3RG78 48-2BC Z-bracket

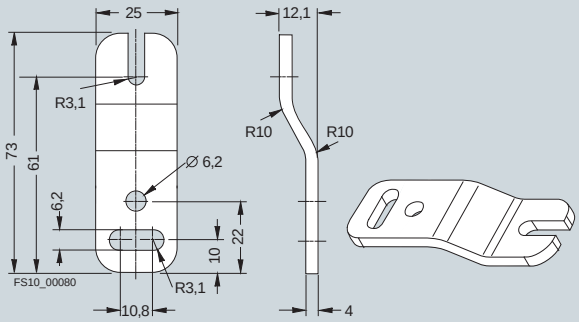

3RG78 48-2BA support 360°

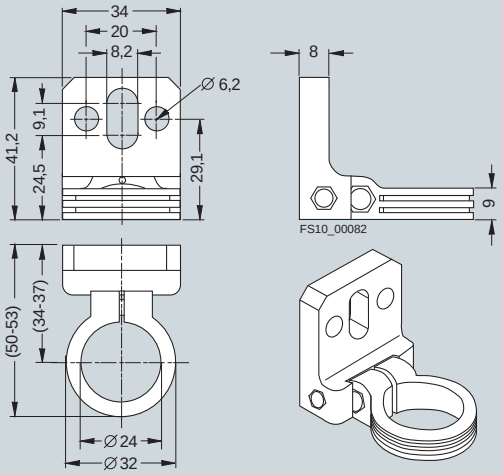

3RG78 48-0BB pivoting support

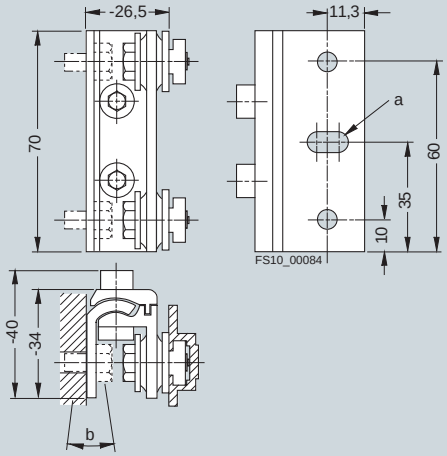

Local connectivity box 3RG7848-2AB

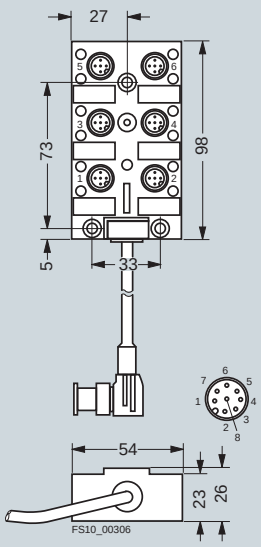

8WD42 00-1AE signaling column with continuous light element, 8WD42 08-0EF tube and 8WD42 08-0DE pedestal

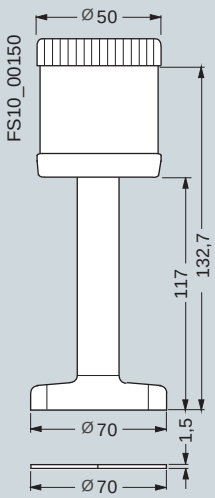

8WD42 08-0DE pedestal

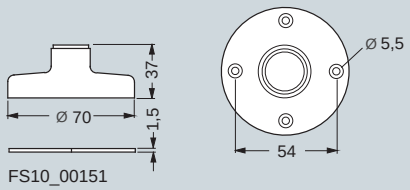

8WD42 08-0CA bracket for wall mounting

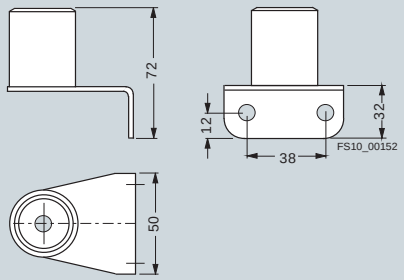

8WD42 08-0DE connecting element

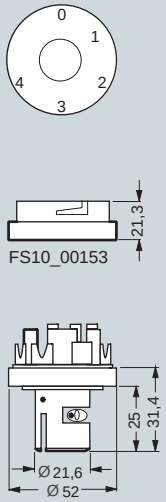

Overview

Our optical distance sensors provide perfect all-round protection to type 3 in accordance with IEC/EN 61496.

In an operating field of 190° and over a distance of up to 4.0 m (up to 15 m in non-safety-related applications), the laser scanner reliably senses every object and every person. And it works so simply: The distance sensor emits light pulses at regular intervals.

If they hit an obstruction, the sensor receives the reflected light and evaluates it. If this is evaluated as the predefined area to be protected, a Stop function is triggered.

With up to four programmable protection field pairs that can be selected during operation, our laser scanners can be optimally adapted to any application – on machines, production robots, conveyor systems or vehicles.

Different variants support optimal integration in the automation system: Whether conventionally in the safety circuit, over PROFIBUS with PROFIsafe or over AS-Interface with ASIsafe.

Application

Horizontal danger zone protection

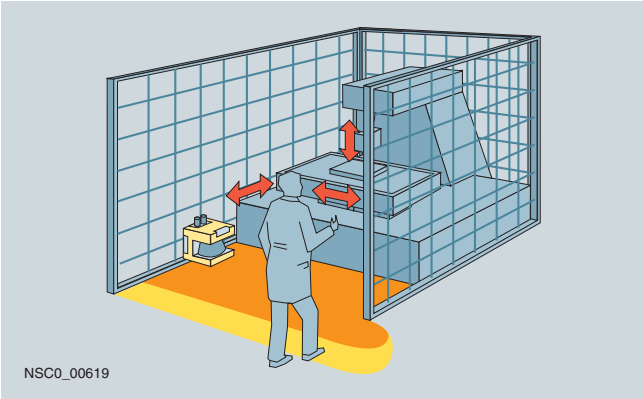

- Reliable detection of persons and objects in danger zones around machines and plants.
- Flexible programming of almost any protection and warning zones.

Horizontal danger zone protection with more than one protection field

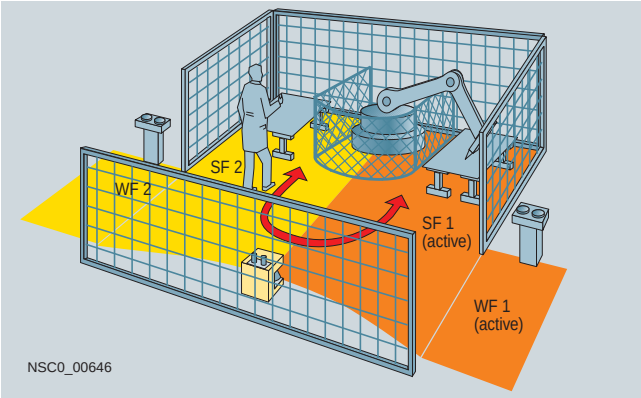

- Reliable detection of persons in different danger zones by switching between protection fields.
- Increased availability due to accurate protection of just the fields that are currently active.

Route monitoring for automatic guided vehicle systems

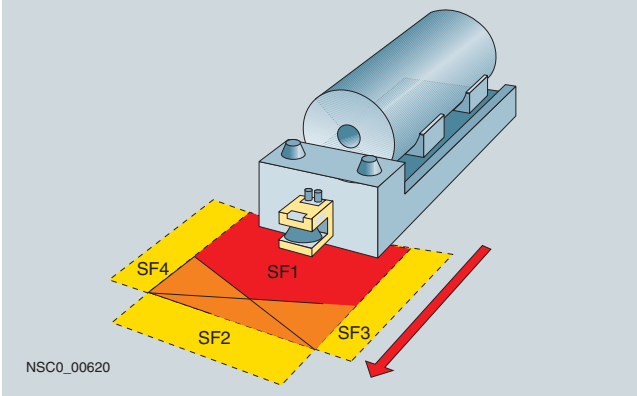

- Reliable detection of persons and objects approaching the vehicle.
- The laser scanner offers a greater protection range than bumpers and, therefore, permits higher speeds.

Collision protection for shifting units

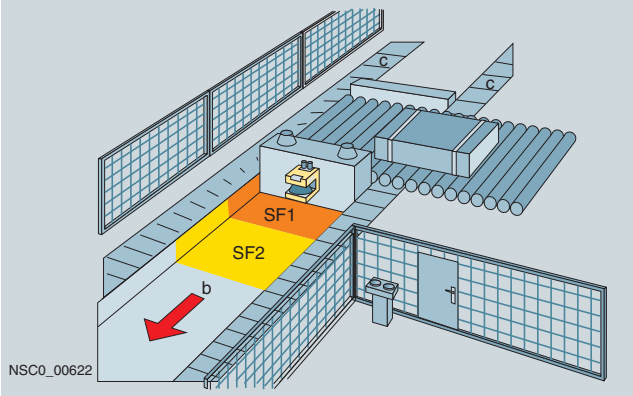

- Reliable protection of persons in the path of the vehicle.
- Objects in the path of the vehicle are detected in good time and damage to the vehicle or its load is prevented.

Other applications

- Many different types of hazardous area protection
- Protection for rooms and entrances
- Projecting object monitoring to protect machines and personnel
- Non-safety-relevant measuring or detection tasks (e.g. determining distances, positions, or contours).

Introduction

Access protection by means of entry control

Access protection by means of entry control can be used when the entry location to a machine or to a danger zone can be precisely defined and when no other unsecured access to this area exists.

The laser scanner is preferably mounted above the entry point, aligned vertically. To protect the protective devices, laser scanners and fence from inadvertent adjustment and malicious manipulation, the protection fields of the laser scanners must be defined using reference contours. In this operating mode, the scanner uses the sampled environment as a reference and can therefore monitor changes to the structure of the protective equipment as well as each individual measurement to detect an entering person.

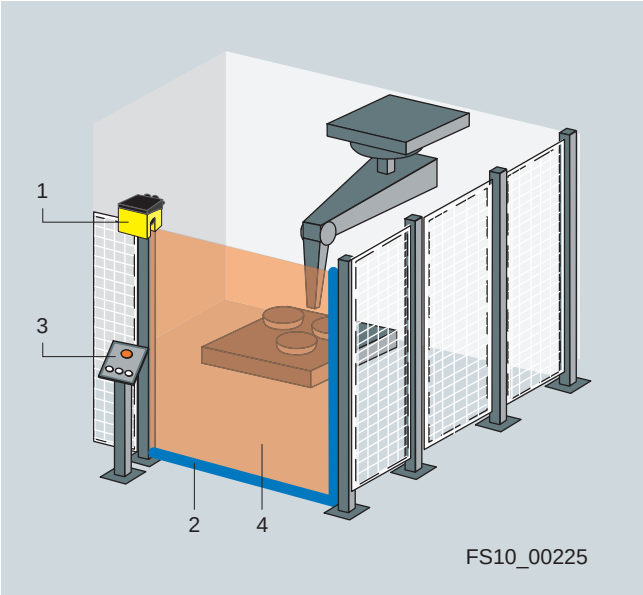

Access through entry control

1 Laser scanners

2 Reference contour

3 Emergency stop

4 Protection field

Securing danger zones by means of hand and arm guards

If a machine operator has to be close to the dangerous movement or if the operator coordinates the positioning and removal of workpieces at the machine, danger zone protection must be implemented at the machine.

A protective device must be used to guard these danger zones. The laser scanner is approved for securing danger zones by means of hand and arm guards and can, also in combination with protection field changeover, ensure flexible work safety. To protect the protective devices, laser scanners and the screens (attached to the sides as a reference and as additional access protection) from inadvertent adjustment and malicious manipulation, the protection fields of the laser scanners must be defined using reference contours.

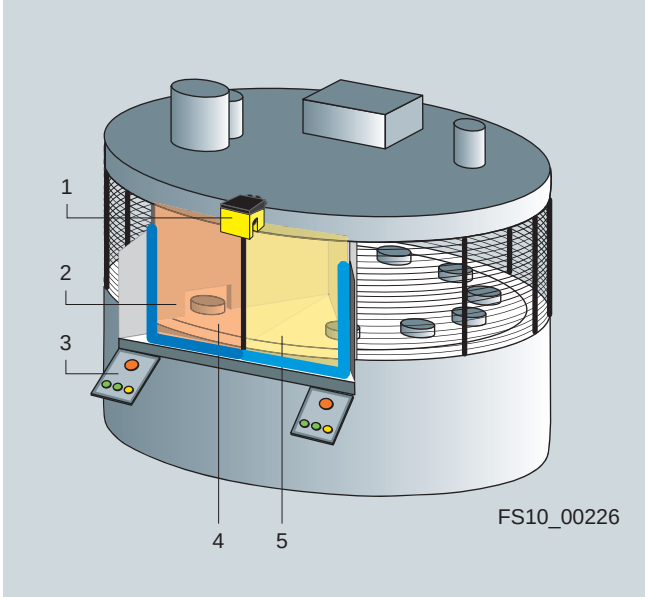

Application example for a circular table

1 Laser scanners

2 Reference contour

3 Emergency stop

4, 5 Protection fields with reference classes

Function

The laser scanner is an optical, contact-free surface scanner – designed primarily for operator protection.

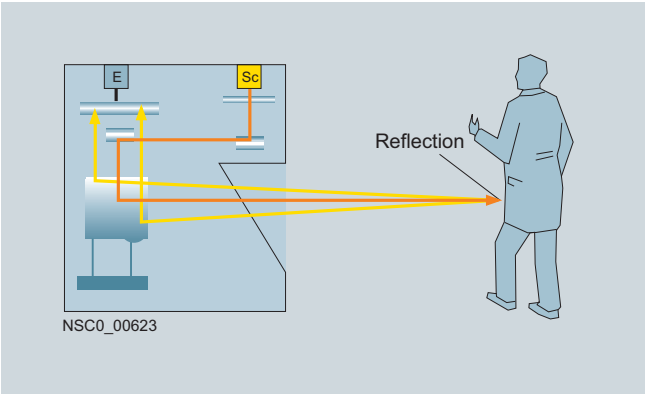

Using a laser diode with transmission optics, the laser scanner continuously generates bundled light pulses that are scattered throughout the operating range by an integrated rotating mirror. If objects or persons enter the field, it evaluates the reflected light pulses and continuously calculates the exact position coordinates on the basis of the light propagation time. If the defined personnel protection field is penetrated, the laser scanner stops the machine immediately (within the system response time). The Stop function is reset when the protection field is free again, either automatically or following acknowledgement (depending on the operating mode).

The operating range of the laser scanner spans 190° and is subdivided into angle segments of 0.36°.

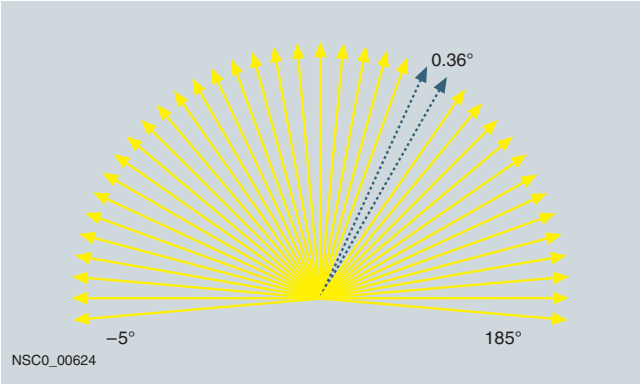

The scan rate is 25 scans/second, i.e. one light pulse every 40 ms in each segment. A special algorithm ensures that objects larger than 70 mm (this corresponds to the scanner resolution) can be reliably detected and that contamination (e.g. dust) does not reduce system availability. The laser scanner detects people (even if they are wearing dark clothing) at a distance of up to 4 m (failsafe). People or objects can, however, be detected at a distance of up to 15 m so that a warning can be output, for example (not safety relevant).

Four protection field/warning field pairs

Four variable protection field pairs for the personnel protection field and warning field, which can be easily set on the PC, ensure that the laser scanner can be adapted to suit any requirement.

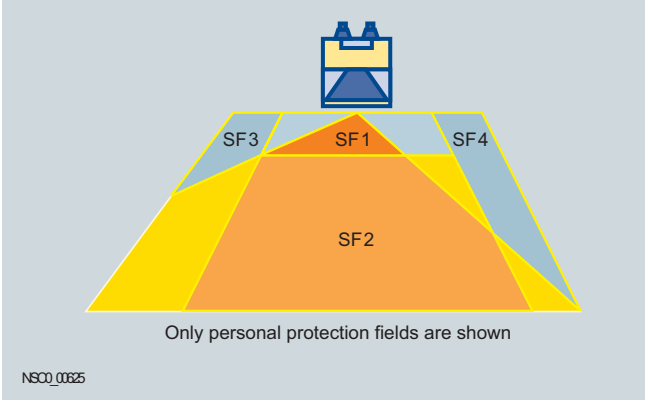

It can be implemented in stationary applications (machines and installations) or mobile applications (vehicles, automatic guided vehicle systems, or shifting units). In the case of a robot, for example, different operating ranges can be protected, whereby the laser scanner operates in succession with regard to time and space. In the case of automatic guided vehicle systems, four programmable protection fields can be protected (e.g. rapid travel, slow travel, turning left, turning right).

LS4soft operator software

Thanks to the PC operator software LS4soft, it could not be easier to optimize the laser scanner settings. The following functions have been integrated:

- User-friendly configuration of the protection field using a PC or laptop
- Configuration of additional functions, such as protection field selection, restart inhibit, etc. by means of a software wizard
- Comprehensive range of displays, e.g. defined protection fields, current scan contours, system settings, etc. reliable, password-protected access with different authorization levels
- Executable under Microsoft Windows 95/98/NT/2000/XP

The operator software is supplied with the laser scanner.

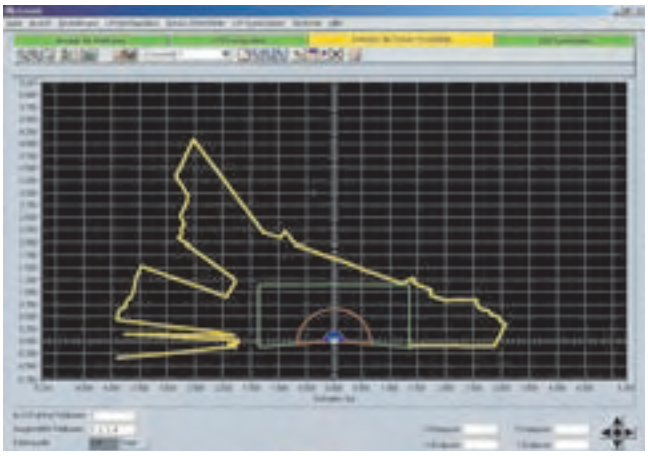

Standard laser scanners

Overview

Standard laser scanner with port covers

Integration

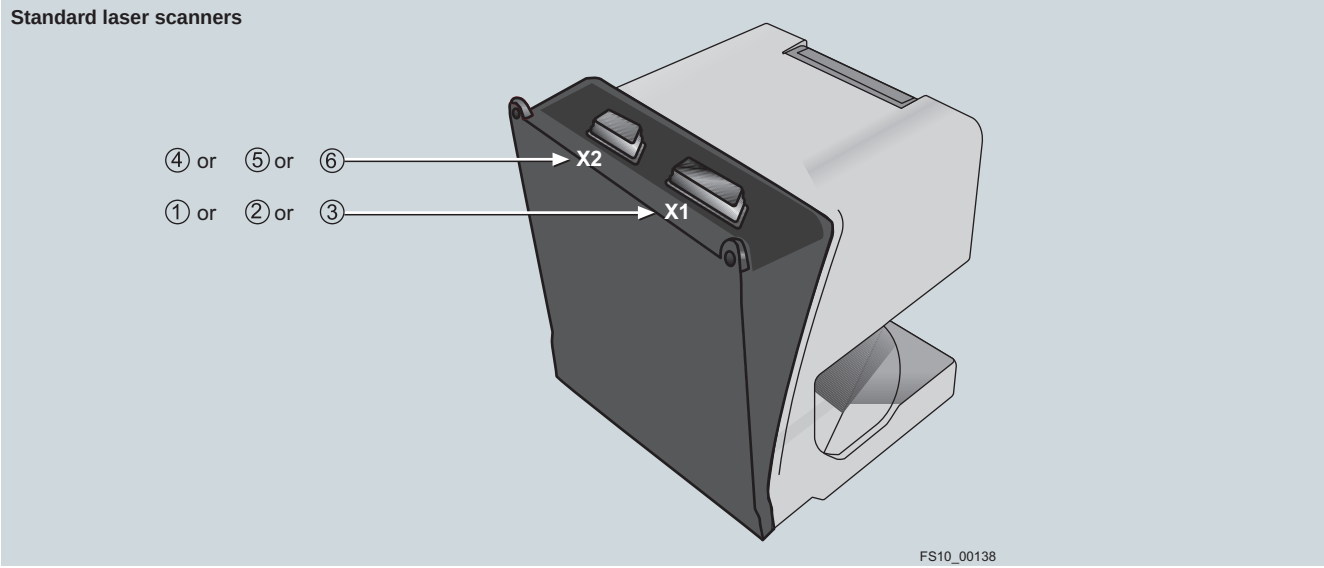

Contact assignment

Connection	Description	Position	Connectable accessories	Order No.
X1	15-pole Sub-D connector for control interface	①	ConfigPlug, straight, without cable	3RG78 38-2AB
		②	(not applicable)	(not applicable)
		③	Cable	3RG78 38-2BD (5 m) 3RG78 38-2BE (10 m) 3RG78 38-2BF (25 m) 3RG78 38-2BG (50 m) 3RG78 38-2BH (10 m, angled)
X2	9-pole Sub-D connector for RS232/RS422 PC interface	④	Connector, complete, 9-pole	3RG78 38-1CA
		⑤	Connector, complete, 9-pole with side cable entry	3RG78 38-1CB
		⑥	Connecting cable, incl. connector, 9-pole	3RG78 38-1CC (3 m) 3RG78 38-1CD (5 m) 3RG78 38-1CE (10 m)

Technical specifications

Type	Standard laser scanners
Operator protection zone	
Detection zone	0 ... 4 m (SIMATIC FS620I and SIMATIC FS660I) 0 ... 2.15 m (SIMATIC FS660 SR)
Degree of remission	min. 1.8%
Object size, object diameter	70 mm (cylindrical test object)
Response time	
• 2-fold evaluation (2 scans)	80 ms
• Adjustable up to 16 scans	640 ms
Number	4/8 (selectable via switched inputs)
Output	2 fail-safe pnp transistor outputs, 24 V, 250 mA
Safety category	
• according to DIN V 19250	Requirement class 4
• according to EN 954-1	Category 3, single fault safety
• according to IEC 61496-1, EN 61496-3	Type 3
• to IEC 61508	SIL 2
Start-up	The start-up test and the start-up inhibit can be adjusted separately
Warm restart	160 ms ... 10 s settable or manually
Additional distance with dust suppression deactivated	83 mm
Additional distance with dust suppression activated	
• For protection fields < 3.5 m	83 mm
• For protection fields > 3.5 m	100 mm
Additional distance for retro-reflectors or strongly reflective surfaces (such as certain metals or ceramics in the scan plane)	
• Over 1.2 m behind the protection field line	0 mm
• In the protection field or up to 1.2 m behind the protection field line	110 mm
Warning zone	
Detection zone	0 ... 15 m
Degree of remission	min. 20%
Object size	150 mm × 150 mm
Response time	
• 2-fold evaluation (2 scans)	80 ms
• Adjustable up to 16 scans	640 ms
Number of warning zones	4 (selectable via switched inputs)
Output	pnp transistor output, max. 100 mA
Contour measurement	
Detection zone	0 ... 50 m
Degree of remission	min. 20%
Object size	–
Output	Serial interface RS 232 (10 m), RS 422 (50 m)
Radial resolution	5 mm
Lateral resolution	0.36°

Type	Standard laser scanners
Power supply	
Operating voltage	Supply according to IEC 60742 with safety transformer or comparable with DC/DC converters
• External supply	24 V DC, –30 to +20%
Current consumption	approx. 300 mA, 2.5 A power supply should be used
Power consumption at 24 V	8 W plus output loading
Overcurrent protection	With fuse 1.25 A, medium time-lag, in control cabinet
Overvoltage protection	With safe switch-off at limit
Voltage dips	according to EN 61496-1
Protective conductor	Connection not permissible
Inputs	
Restart/Reset	Connection of a command device for operating mode with restart inhibit and/or device reset, dynamically monitored, 24 V DC opto-decoupled
Field pair switchover	Selection of 4 field pairs over 4 control lines with internal monitoring (1 field pair = 1 protective zone and 1 warning zone), 24 V DC opto-decoupled
Signal definition	
• High (logic 1)	16 ... 30 V
• Low (logic 0)	< 3 V
Parameterization	
Operator software	Communication and parameterization software under Windows 95/98/NT/2000/XP with secure protocol for programming
Interfaces	
For parameterizing devices and defining fields	RS232, RS422
Outputs	
Protection field	2 × safe semiconductor output, pnp, max. 250 mA short-circuit monitoring, protected against overcurrent
Warning zone/fouling/fault	pnp transistor output, max. 100 mA
Load properties, maximum values	Low-pass response
• Limit frequency f_g	< 1 kHz
• Capacitance C_{Load}	< 100 nF
Level	
• High (OSSD)	U_b - 3.2 V
• Low (OSSD)	< 2 V
• High (alarm active)	U_b - 4 V
• Low (alarm inactive)	< 2 V
Environment and material	
Degree of protection according to IEC 60529	IP65
Touch protection	Total insulation, protection class 2
Ambient temperature	
• Operation	0 ... +50 °C
• Storage	–20 ... +60 °C
Humidity according to DIN 40040	Table 10, identification letter E (fairly dry)

Standard laser scanners

Type	Standard laser scanners
Enclosure material	Cast aluminum, plastic
Weight	approx. 2 kg
Dimensions (W × H × D) in mm	140 × 155 × 135
Distance from center of the scan plane to the bottom edge of the enclosure	48.75 mm
Distance from rear edge of enclosure to rotating mirror axis	68 mm
Vibratory load over 3 axes according to IEC 60068, Part 2-6	10 ... 150 Hz, max. 5 *g*
Continuous shock over 3 axes according to IEC 60068, Part 2-29	10 *g*, 16 ms
Interference immunity	
• according to EN 61496-1	According to the requirements for Type 4
• Additionally according to DIN 40839-1, -3	Test pulses 1, 2, 3a, 3b, 5 (not for use in vehicles with internal combustion engines)
Rotating mirror drive	Brushless DC motor
Rotating mirror bearings	Maintenance-free ball bearings
Connections	
Connectors	2 connectors (connectable from above, soldered connection)
Cable lengths	
• Control cable X1	max. 50 m with 0.5 mm^2 conductor cross-section, shielded
• Data cable X2, RS232	max. 10 m
• Data cable X2, RS422	max. 50 m (twisted pair)
Optical properties	
Range of angle	max. 190°
Angle resolution	0.36°
Lateral tolerance	
• Without mounting system (with reference to rear of enclosure)	± 0.18°
• With mounting system (with reference to the mounting surface)	± 0.22°
Scan rate	25 scans/s or 40 ms/scan
Laser protection class according to EN 60825-1	Class 1 (safe for eyes)
Wave length	905 nm (infrared)
Beam divergence	2 mrad
Time basis	100 s

Selection and Ordering data

		Order No.
SIMATIC FS620I standard laser scanner Including LS4soft software for securing danger zones	►	**3RG78 34-6DD00**
SIMATIC FS660I standard laser scanner with vertical security Including LS4soft software for securing danger zones, danger points and access protection	► B	**3RG78 34-6DE00**
SIMATIC FS660 SR standard laser scanner with vertical security Including LS4soft software for securing danger zones, danger points and access protection Maximum protective zone 2.15 m	►	**3RG78 34-6BE00**

Accessories

Assembly system, hinged, for easy adjustment	►	**3RG78 38-1AA**

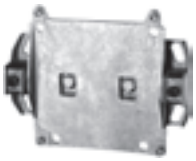

Adapter plate for PLS support	►	**3RG78 38-1AB**
Cleaning set Includes cleaning fluid (1000 ml), cloths (100 units)	►	**3RG78 38-7RS**
Connectors and cables		
• Connector, complete, 9-pole (X2)	►	**3RG78 38-1CA**
• Connector, complete, 9-pole (X2) With lateral cable routing	►	**3RG78 38-1CB**
Connecting cable Laser scanner control cable with ConfigPlug, 15-pole (X1)		
ConfigPlug for all laser scanners, straight, without cable	►	**3RG78 38-2BA**
• 5 m cable, straight, unconnected end	► A	**3RG78 38-2BD**
• 10 m cable, straight, unconnected end	►	**3RG78 38-2BE**
• 25 m cable, straight, unconnected end	►	**3RG78 38-2BF**
• 50 m cable, straight, unconnected end	►	**3RG78 38-2BG**
• 10 m cable, angled, unconnected end	►	**3RG78 38-2BH**
Connecting cable incl. connector, 9-pole (X2)		
• 3 m	►	**3RG78 38-1CC**
• 5 m	►	**3RG78 38-1CD**
• 10 m	►	**3RG78 38-1CE**

Suitable evaluation units, see page 4/82.

A: Subject to export regulations AL = N and ECCN = EAR99H
B: Subject to export regulations AL = N and ECCN = EAR99
► Preferred type, available from stock.

Dimensions

Standard laser scanner with switching output

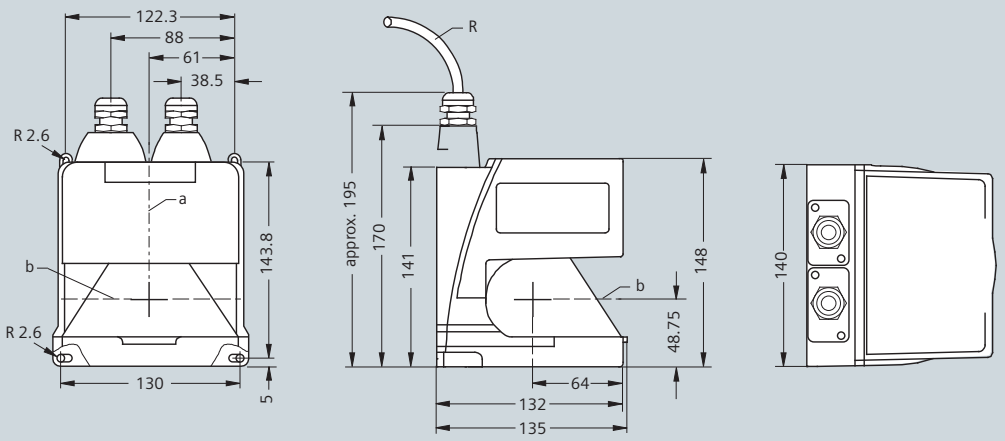

R = smallest bending radius: 50 mm (original accessories)
a = rotating mirror axis
b = scan level

Assembly system 3RG78 38-1AA

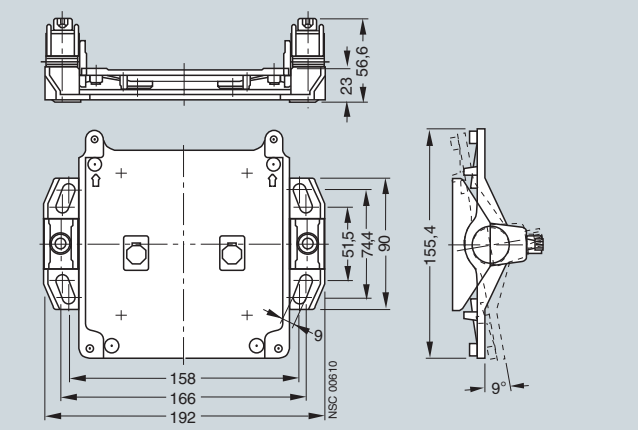

4

ASIsafe laser scanner

Overview

ASIsafe laser scanner

Integration

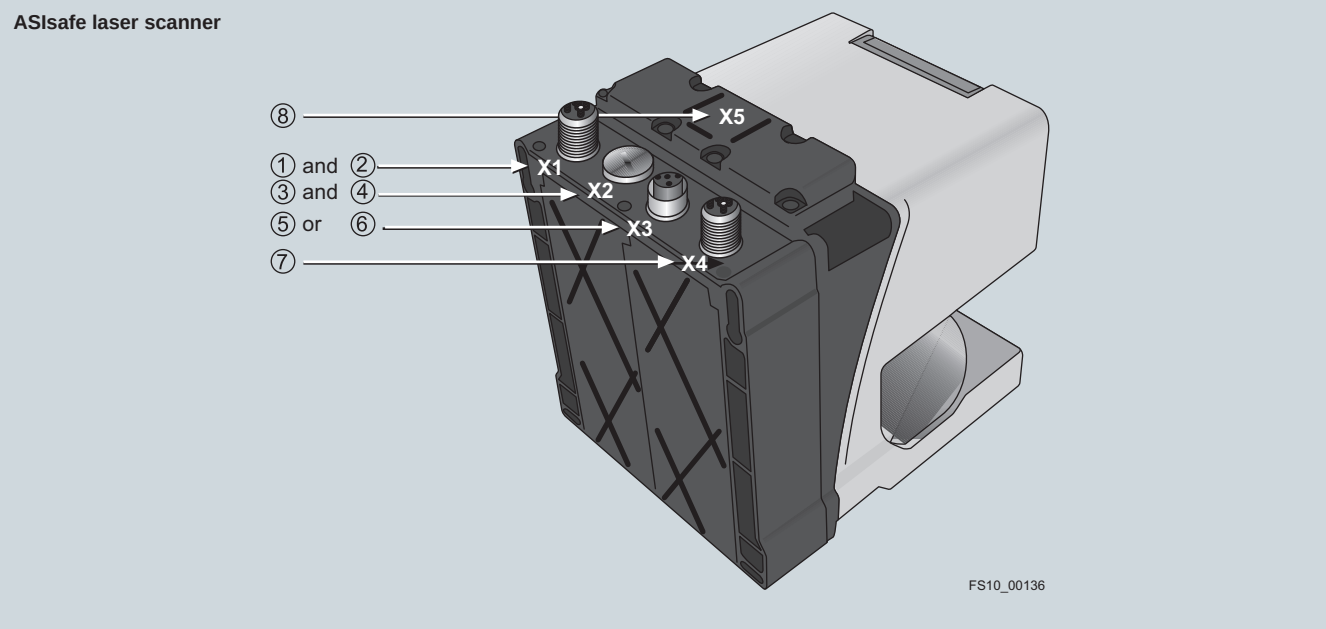

Contact assignment

Terminal	Description	Item	Connectable accessories	Order No.
X1	M12 connector for AS-Interface connection (bus connection and 24 V DC power supply)	①	Laser scanner connecting cable to M12 AS-Interface adapter	3RG78 38-1EA (1 m) 3RG78 38-1EB (2 m)
		②	M12 AS-Interface adapter	3RG78 38-1DG
X2	Connection for AS-Interface addressing and diagnostics unit	③	AS-Interface addressing and diagnostics unit	3RK1 904-2AB01
		④	Connecting cable with M12 socket and M12 plug (3-core)	3RX8 000-0GF32-1AB5 (1.5 m)
X3	M12 socket for connecting the changeover for the protection fields	⑤	M12 jumper plug (suitable for protection field 1)	3RG78 38-1DF
		⑥	M12 connector with terminal housing, 5-pole	3RX8 000-0CD55
X4	M12 connector for connecting a restart button (optional)	⑦	M12 cable socket with terminal housing, 5-pole	3RX8 000-0CB55
X5	Optical PC interface	⑧	PC connecting cable for laser scanner with optical interface, 9-pole	3RG78 38-1DC

Technical specifications

Type	ASIsafe laser scanner
Protection field	
Detection zone	0 ... 4 m
Degree of remission	min. 1.8%
Object size (diameter)	70 mm (cylindrical test object)
Response time	
• 2-fold evaluation (2 scans)	85 ms (laser scanner only, without AS-Interface system times)
• Adjustable up to 16 scans	645 ms (laser scanner only, without AS-Interface system times)
Number	4 (selectable via switched inputs)
Safety category	
• according to EN 954-1	Category 3
• according to IEC 61496-1 or EN 61496-3	Type 3
• according to IEC 61506	SIL 2
Output	Safe AS-Interface interface
Start-up	Start-up test and start-up disable can be set separately
Warm restart	160 ms ... 10 s (settable or manually)
Protection field additional distance	
• with dust suppression deactivated	83 mm
• with dust suppression activated	
- For protection fields < 3.5 mm	83 mm
- For protection fields > 3.5 mm	100 mm
• Additional distance for retro-reflectors or strongly reflective surfaces (such as certain metals or ceramics in the scan plane)	
- Over 1.2 m behind the protection field line	0 mm
- In the protection field or up to 1.2 m behind the protection field line	110 mm
Warning zone	
Detection zone	0 ... 15 m
Degree of remission	min. 20%
Object size	150 × 150 mm
Response time	
• 2-fold evaluation (2 scans)	85 ms (laser scanner only, without AS-Interface system times)
• Adjustable up to 16 scans	645 ms (laser scanner only, without AS-Interface system times)
Number of warning zones	4 (selectable via switched inputs)
Output	AS-Interface
Contour measurement	
Detection zone	0 ... 50 m
Degree of remission	min. 20%
Output	RS232 serial interface via infrared interface
Radial resolution	5 mm
Lateral resolution	0.36°

Type	ASIsafe laser scanner
Supply voltage	
• via AS-Interface network	29.5 ... 31.6 V (according to AS-Interface specification)
• via external supply	24 V DC (+/-20%)
• Note	The power supply unit of the external power supply as well as the AS-Interface power supply unit used to supply the AS-Interface components must provide safe isolation from the supply according to IEC 60742 and bridge short-term power failures of up to 20 ms (e.g. the AS-Interface power supply unit 3RX9 307-0AA00)
Overcurrent protection	Fuse 1.25 A, slow acting
Current consumption from the supply circuit, typically	400 mA
Current consumption from the AS-Interface circuit, typically	50 mA
Inputs	
Restart/Reset	Connection of a command device for operating mode "With restart inhibit" and/or device reset, dynamically monitored, 24 V DC opto-decoupled
Field pair switchover	Selection of 4 field pairs over 4 control lines with internal monitoring (1 field pair = 1 protective zone and 1 warning zone), 24 V DC opto-decoupled
Signal definition	
• High (logic 1)	16 ... 30 V
• Low (logic 0)	< 3 V
Control cable	
• Length	max. 50 m (0.5 mm^2 conductor cross-section, shielded)
AS-Interface address programming	Connection of a generally available AS-Interface address programming device
RS232 interfaces by means of infrared interface	For device parameterization and field function
Optical system	
Range of angle	190°
Angle resolution	0.36°
Lateral tolerance	
• Without mounting system (with reference to rear of enclosure)	± 0.18°
• With mounting system (with reference to the mounting surface)	± 0.22°
Scan rate	25 scans/s or 40 ms/scan
Laser protection class	
• According to standard	EN 60825-1, Class 1 (safe for eyes)
Wave length	905 nm
Beam divergence	2 mrad
Time basis	100 s

ASIsafe laser scanner

Type	ASIsafe laser scanner
Environment and material	
Degree of protection	IP65
Ambient temperature	
• Operation	0 ... +50 °C
• Storage	-20 ... +60 °C
Housing insulation class	Type of protection 2
Humidity	according to DIN 40040, Table 10, identification letter E (fairly dry)
Dimensions (W × H × D) in mm	141 × 167 × 168
Weight	2.25 kg
Emitter	Infrared laser diode (λ = 905 nm)
Housing	Cast aluminum, plastic, steel connection plate
Vibratory load over three axes according to IEC 60068, Part 2-6	10 ... 150 Hz, max. 5 *g*
Continuous shock over three axes according to IEC 60068, Part 2-29	10 *g*, 16 ms
Rotating mirror drive	Brushless DC motor
Rotating mirror bearings	Maintenance-free ball bearings
AS-Interface	
ID code	B
I/O code	0 (four data bits as outputs)
Slave address	Programmed by user in the range from 1 ... 31 (delivery status = 0)
Cycle time according to AS-Interface specification	5 ms
Profile	Safe slave

Selection and Ordering data

		Order No.
SIMATIC FS620I ASIsafe laser scanner	►	**3SF78 34-6DD00**
Including LS4soft software for securing danger zones		
SIMATIC FS660I ASIsafe laser scanner with vertical security	B	**3SF78 34-6DE00**
Including LS4soft software for securing danger zones, danger points and access protection		

Accessories		
Assembly system, hinged, for easy adjustment	►	**3RG78 38-1AA**

Adapter plate for PLS mounting support	►	**3RG78 38-1AB**
Cleaning set	►	**3RG78 38-7RS**
Includes cleaning fluid (1000 ml), cloths (x 100)		
Connectors and cables		
PC connection cable for AS-Interface and PROFIBUS laser scanner	►	**3RG78 38-1DC**
Includes plug (9-pole) and optical interface		
M12 jumper plug (suitable for protection field 1)	►	**3RG78 38-1DF**
M12 adapter	►	**3RG78 38-1DG**
For AS-Interface and power supply		
M12 laser scanner – M12 adapter connection cable		
• 5-pole, 1 m	►	**3RG78 38-1EA**
• 5-pole, 2 m	►	**3RG78 38-1EB**

B: Subject to export regulations AL = N and ECCN = EAR99
► Preferred type, available from stock.

Dimensions

ASIsafe laser scanner

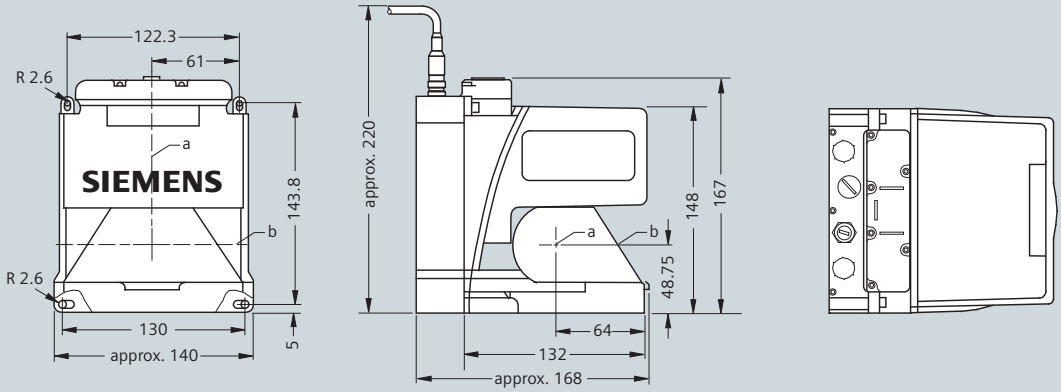

a = rotating mirror axis
b = scan level

Assembly system 3RG7 838-1AA

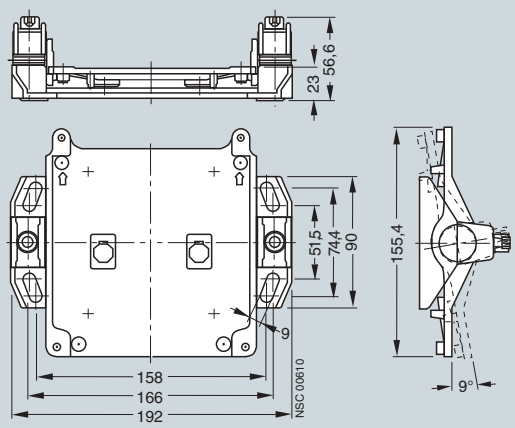

Schematics

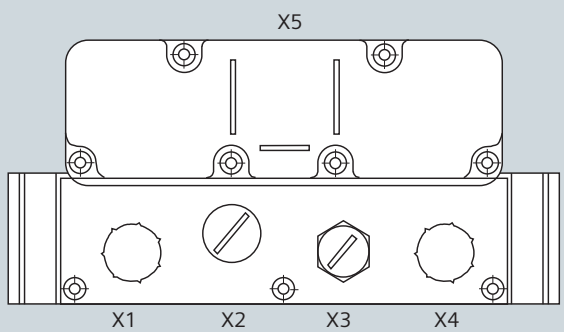

X1 AS-Interface connection (Bus connction and 24 Volt power supply)
X2 AS-Interface connection for address programming device
X3 Connection protective fields switchover
X4 Connection restart button
X5 Optical PC Interface

PROFIsafe laser scanner

Overview

PROFIsafe laser scanner

Integration

PROFIsafe laser scanner

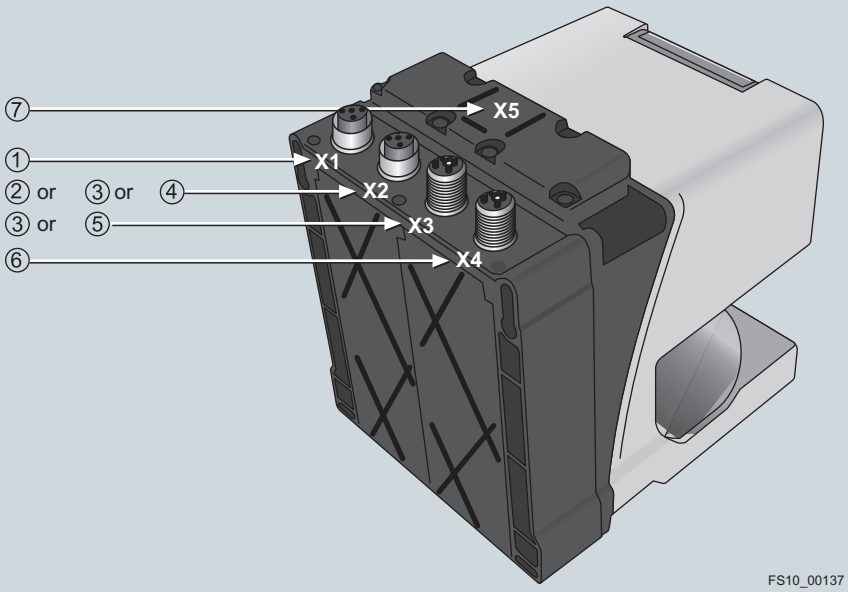

Contact assignment

Terminal	Description	Item	Connectable accessories	Order No.
X1	M12 connector for connecting a restart button (optional)	①	M12 connector with terminal housing, 5-pole	3RX8 000-0CD55
X2	M12 socket for PROFIBUS output cable	②	Terminating resistor for PROFIBUS DP	6GK1 905-0EC00
		③	PROFIBUS M12 connecting cable, with plug and socket, 2-pole	6XV1 830-3DE50 (0.5 m) 6XV1 830-3DH15 (1.5 m) 6XV1 830-3DH30 (3.0 m) 6XV1 830-3DH50 (5.0 m) 6XV1 830-3DN10 (10.0 m) 6XV1 830-3DN15 (15.0 m)
		④	PROFIBUS M12 connecting plug with male insert	6GK1 905-0EA00
X3	M12 plug for PROFIBUS input cable	③	PROFIBUS M12 connecting cable, with plug and socket, 2-pole	6XV1 830-3DE50 (0.5 m) 6XV1 830-3DH15 (1.5 m) 6XV1 830-3DH30 (3.0 m) 6XV1 830-3DH50 (5.0 m) 6XV1 830-3DN10 (10.0 m) 6XV1 830-3DN15 (15.0 m)
		⑤	PROFIBUS M12 connecting plug with female insert	6GK1 905-0EB00
X4	M12 plug for 24 V DC power supply	⑥	M12 cable socket with terminal housing, 5-pole	3RX8 000-0CB55
X5	Optical PC interface	⑦	PC connecting cable for laser scanner with optical interface, 9-pole	3RG78 38-1DC

Technical specifications

Type	PROFIsafe laser scanner
Protection field	
Detection zone	0 ... 4 m
Degree of remission	min. 1.8%
Object size (diameter)	70 mm (cylindrical test object)
Response time	
• 2-fold evaluation (2 scans)	80 ms (laser scanner only, without PROFIBUS system times)
• Adjustable up to 16 scans	640 ms (laser scanner only, without PROFIBUS system times)
Number	4 (selectable via PROFIBUS)
Safety category	
• according to EN 954-1	Category 3
• according to IEC 61496-1 or EN 61496-3	Type 3
• according to IEC 61506	SIL 2
Output	PROFIBUS (PROFIsafe profile)
Start-up	Start-up test and start-up disable can be set separately
Warm restart	160 ms ... 10 s (settable or manually)
Protection field additional distance	
• with dust suppression deactivated	83 mm
• with dust suppression activated	
- For protection fields < 3.5 mm	83 mm
- For protection fields > 3.5 mm	100 mm
• Additional distance for retro-reflectors or strongly reflective surfaces (such as certain metals or ceramics in the scan plane)	
- Over 1.2 m behind the protection field line	0 mm
- In the protection field or up to 1.2 m behind the protection field line	110 mm
Warning zone	
Detection zone	0 ... 15 m
Degree of remission	min. 20%
Object size	150 × 150 mm
Response time	
• 2-fold evaluation (2 scans)	80 ms (laser scanner only, without PROFIBUS system times)
• Adjustable up to 16 scans	640 ms (laser scanner only, without PROFIBUS system times)
Number of warning zones	4 (selectable via PROFIBUS)
Output	PROFIBUS
Contour measurement	
Detection zone	0 ... 50 m
Degree of remission	min. 20%
Output	RS232 serial interface via infrared interface
Radial resolution	5 mm
Lateral resolution	0.36°
Supply voltage	
• via external supply	24 V DC (+20% / -30%)

Type	PROFIsafe laser scanner
• Note	The power supply unit for the external power supply must feature safe isolation from the supply according to IEC 60742 and bridge temporary power failures of up to 20 ms.
Overcurrent protection	Fuse 1.25 A, slow acting
Current consumption	typ. 350 mA
Inputs	
Restart/Reset	Connection of a command device for operating mode "With restart inhibit" and/or device reset, dynamically monitored
Signal definition	
• High (logic 1)	16 ... 30 V
• Low (logic 0)	< 3 V
Control cable	
• Length	max. 50 m (with 0.5 mm^2 conductor cross-section, shielded)
Field pair switchover	Field pair switchover over PROFIBUS (PROFIsafe profile)
RS232 interfaces by means of infrared interface	For device parameterization and field function
Optical system	
Range of angle	190°
Angle resolution	0.36°
Lateral tolerance	
• Without mounting system (with reference to rear of enclosure)	± 0.18°
• With mounting system (with reference to the mounting surface)	± 0.22°
Scan rate	25 scans/s or 40 ms/scan
Laser protection class	
• According to standard	EN 60825-1, Class 1 (safe for eyes)
Wave length	905 nm
Beam divergence	2 mrad
Time basis	100 s
Environment and material	
Degree of protection	IP65
Ambient temperature	
• Operation	0 ... +50 °C
• Storage	-20 ... +60 °C
Housing insulation class	Type of protection 2
Humidity	according to DIN 40040, Table 10, identification letter E (fairly dry)
Dimensions (W × H × D) in mm	141 × 167 × 168
Emitter	Infrared laser diode (λ = 905 nm)
Housing	Cast aluminum, plastic, steel connection plate
Vibratory load over three axes according to IEC 60068, Part 2-6	10 ... 150 Hz, max. 5 *g*
Continuous shock over three axes according to IEC 60068, Part 2-29	10 *g*, 16 ms
Rotating mirror drive	Brushless DC motor
Rotating mirror bearings	Maintenance-free ball bearings

PROFIsafe laser scanner

Selection and Ordering data

		Order No.
SIMATIC FS620I PROFIsafe laser scanner Including LS4soft software for securing danger zones		**3SF78 34-6PB00**
SIMATIC FS660I PROFIsafe laser scanner with vertical security Including LS4soft software for securing danger zones, danger points and access protection 	B	**3SF78 34-6PE00**
Accessories		
Assembly system, hinged, for easy adjustment 	►	**3RG78 38-1AA**
Adapter plate for PLS mounting support	►	**3RG78 38-1AB**
Cleaning set Includes cleaning fluid (1000 ml), cloths (x 100)	►	**3RG78 38-7RS**
Connectors and cables		
PC connection cable for AS-Interface and PROFIBUS laser scanners including plug (9-pole), and optical interface	►	**3RG78 38-1DC**
PROFIBUS M12 terminating connector For PROFIBUS DP 1 packet = 5 items	►	**6GK1 905-0EC00**
PROFIBUS M12 connectors 1 packet = 5 items		
• Male insert	►	**6GK1 905-0EA00**
• Socket insert	►	**6GK1 905-0EB00**
PROFIBUS M12 plug-in cables 2-core (inverted coding) preassembled, with M12 connectors, in different lengths:		
• 0.5 m	►	**6XV1 830-3DE50**
• 1.5 m	►	**6XV1 830-3DH15**
• 3.0 m	►	**6XV1 830-3DH30**
• 5.0 m	►	**6XV1 830-3DH50**
• 10.0 m	►	**6XV1 830-3DN10**
• 15.0 m	►	**6XV1 830-3DN15**

B: Subject to export regulations AL = N and ECCN = EAR99
► Preferred type, available from stock.

Dimensions

PROFIsafe laser scanner

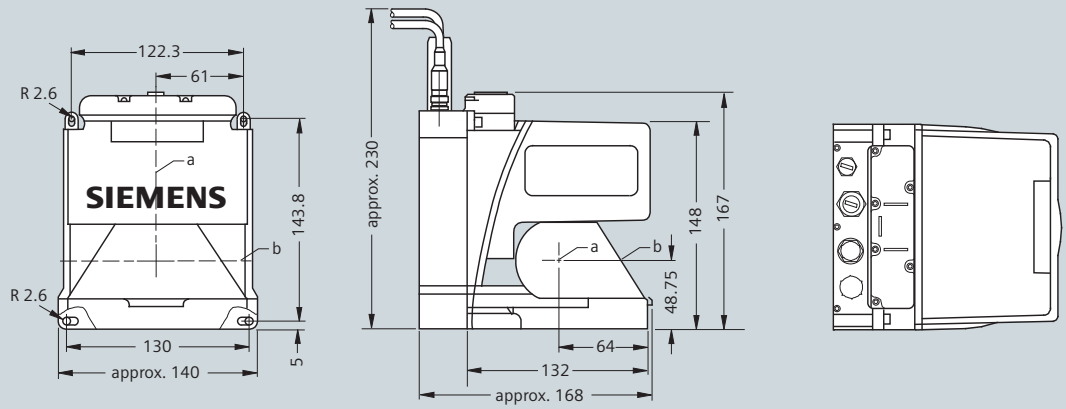

a = rotating mirror axis
b = scan level

Assembly system 3RG78 38-1AA

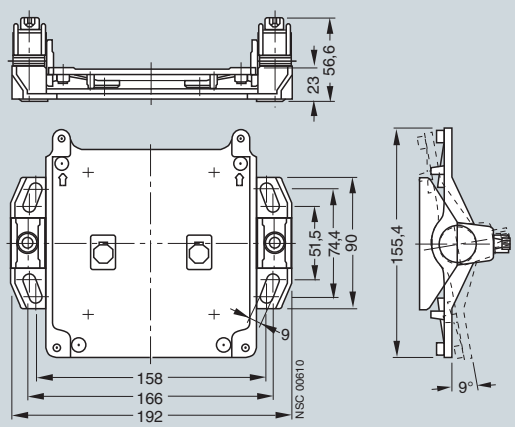

Schematics

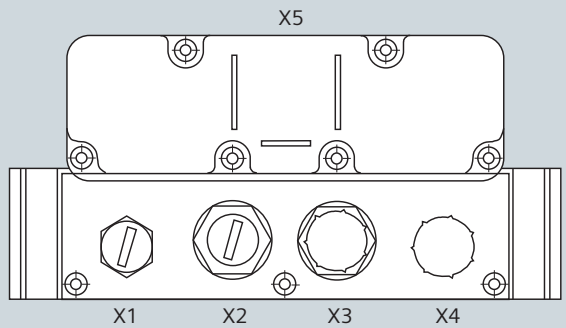

X1 Connection restart button
X2 PROFIBUS output wire link
X3 PROFIBUS input wire link
X4 Connection supply voltage
X5 Optical PC Interface

Notes

1) AL = 9I999 applies here as well
(AL = number in the German export list.
AL = N for all other Order Nos.).