RFID SYSTEMS

SIMATIC RF600

System Manual · 10/2009

SIMATIC Sensors

SIEMENS

SIEMENS

SIMATIC Sensors

RFID systems SIMATIC RF600

System Manual

Introduction 1

Safety Information 2

System overview 3

RF600 system planning 4

Readers 5

Antennas 6

Transponder/tags 7

Integration into networks 8

System diagnostics 9

Accessories 10

Appendix A

10/2009
J31069-D0171-U001-A8-7618

Legal information

Warning notice system

This manual contains notices you have to observe in order to ensure your personal safety, as well as to prevent damage to property. The notices referring to your personal safety are highlighted in the manual by a safety alert symbol, notices referring only to property damage have no safety alert symbol. These notices shown below are graded according to the degree of danger.

⚠ DANGER

indicates that death or severe personal injury **will** result if proper precautions are not taken.

⚠ WARNING

indicates that death or severe personal injury **may** result if proper precautions are not taken.

⚠ CAUTION

with a safety alert symbol, indicates that minor personal injury can result if proper precautions are not taken.

CAUTION

without a safety alert symbol, indicates that property damage can result if proper precautions are not taken.

NOTICE

indicates that an unintended result or situation can occur if the corresponding information is not taken into account.

If more than one degree of danger is present, the warning notice representing the highest degree of danger will be used. A notice warning of injury to persons with a safety alert symbol may also include a warning relating to property damage.

Qualified Personnel

The product/system described in this documentation may be operated only by **personnel qualified** for the specific task in accordance with the relevant documentation for the specific task, in particular its warning notices and safety instructions. Qualified personnel are those who, based on their training and experience, are capable of identifying risks and avoiding potential hazards when working with these products/systems.

Proper use of Siemens products

Note the following:

⚠ WARNING

Siemens products may only be used for the applications described in the catalog and in the relevant technical documentation. If products and components from other manufacturers are used, these must be recommended or approved by Siemens. Proper transport, storage, installation, assembly, commissioning, operation and maintenance are required to ensure that the products operate safely and without any problems. The permissible ambient conditions must be adhered to. The information in the relevant documentation must be observed.

Trademarks

All names identified by ® are registered trademarks of the Siemens AG. The remaining trademarks in this publication may be trademarks whose use by third parties for their own purposes could violate the rights of the owner.

Disclaimer of Liability

We have reviewed the contents of this publication to ensure consistency with the hardware and software described. Since variance cannot be precluded entirely, we cannot guarantee full consistency. However, the information in this publication is reviewed regularly and any necessary corrections are included in subsequent editions.

Siemens AG
Industry Sector
Postfach 48 48
90026 NÜRNBERG
GERMANY

J31069-D0171-U001-A8-7618
℗ 09/2009

Copyright © Siemens AG 2005, 2009.
Technical data subject to change

Table of contents

1 Introduction 13

1.1 Preface 13

1.2 Navigating in the system manual 14

2 Safety Information 15

2.1 General safety instructions 15

2.2 Safety instructions for third-party antennas as well as for modifications to the RF600 system 16

2.3 Safety distance to transmitter antenna 17
2.3.1 Safety distance between transmitter antenna and personnel 17
2.3.2 Minimum distance to antenna in accordance with ETSI 18
2.3.3 Minimum distance to antenna in accordance with FCC (USA) 19

3 System overview 21

3.1 RF System SIMATIC RF600 21
3.1.1 Application areas of RF600 22
3.1.2 System components (hardware/software) 23
3.1.3 Features 25

4 RF600 system planning 29

4.1 Overview 29

4.2 Possible system configurations 29
4.2.1 Scenario for incoming goods 30
4.2.2 Scenario for material handling control 32
4.2.3 Scenario for workpiece identification 34
4.2.4 Scenario for Intra logistics 36
4.2.5 Scenario for outgoing goods 38

4.3 Antenna configurations 40
4.3.1 Antenna configuration example 41
4.3.2 Possibilities and application areas for antenna configurations 42
4.3.3 Tag orientation in space 46
4.3.4 Specified minimum and maximum spacing of antennas 47
4.3.5 Mutual interference of readers (antennas) 49
4.3.6 Reading range 50
4.3.7 Operation of several readers within restricted space 51
4.3.7.1 Dense Reader Mode 51
4.3.7.2 Optimizing tag reading accuracy 53
4.3.7.3 Optimization of robustness of tag data accesses for readers that are operated simultaneously 53
4.3.7.4 Frequency hopping 55
4.3.7.5 Listen before talk 55

4.4 Environmental conditions for transponders/tags 56
4.4.1 Basic rules 56

4.5 The response of electromagnetic waves in the UHF band 57
4.5.1 The effect of reflections and interference 57

4.5.2 Influence of metals ... 58
4.5.3 Influence of liquids and non-metallic substances ... 58
4.5.4 Influence of external components ... 59

4.6 Regulations applicable to frequency bands ... 60
4.6.1 Regulations for UHF frequency bands in Europe ... 60
4.6.1.1 Regulations for UHF frequency bands in Europe (ETSI EN 302 208 V1.1.2) ... 60
4.6.1.2 Regulations for UHF frequency bands in Europe (ETSI EN 302 208 V1.2.1) ... 62
4.6.1.3 Regulations for frequency bands according to EN 300 220 (short range device) ... 63
4.6.1.4 Partial abrogation of the regulations for France ... 64
4.6.2 Regulations for UHF frequency bands in the USA ... 66
4.6.3 Regulations for UHF frequency bands in Thailand ... 67
4.6.4 Regulations for UHF frequency bands in China ... 68

4.7 Guidelines for electromagnetic compatibility (EMC) ... 69
4.7.1 Overview ... 69
4.7.2 What does EMC mean? ... 70
4.7.3 Basic rules ... 71
4.7.4 Propagation of electromagnetic interference ... 72
4.7.5 Prevention of interference sources ... 75
4.7.6 Equipotential bonding ... 76
4.7.7 Cable shielding ... 77

5 Readers ... 79

5.1 RF660R reader ... 80
5.1.1 Description ... 80
5.1.1.1 Ordering data ... 81
5.1.1.2 Design of the RF660R reader ... 82
5.1.1.3 Status displays ... 83
5.1.1.4 Pin assignment of the serial interfaces ... 84
5.1.1.5 Pin assignment and connections of the digital I/O interface ... 85
5.1.1.6 Pin assignment of the connecting cable ... 87
5.1.1.7 Power supply ... 88
5.1.1.8 Grounding connection ... 88
5.1.2 Planning application ... 89
5.1.2.1 Increasing the probability of identification for tags - Antenna switching ... 90
5.1.3 Installation /Mounting ... 91
5.1.3.1 Configuration/integration ... 92
5.1.4 Technical specifications ... 94
5.1.4.1 Mechanical data ... 94
5.1.4.2 Technical data according to EPC and ISO ... 96
5.1.5 Dimension drawings ... 97
5.1.6 Certificates and approvals ... 98
5.1.6.1 CE mark ... 98
5.1.6.2 FCC information ... 99

5.2 RF620R reader ... 100
5.2.1 Description ... 100
5.2.1.1 Ordering data ... 101
5.2.1.2 Status display ... 102
5.2.1.3 Pin assignment of the RS422 interface ... 103
5.2.1.4 Pin assignment of the connecting cable ... 103
5.2.1.5 Grounding connection ... 104
5.2.2 Planning application ... 105
5.2.2.1 Minimum mounting clearances of two readers ... 105
5.2.2.2 Antenna diagram for RF620R (ETSI) ... 105
5.2.2.3 Antenna diagram for RF620R (FCC) ... 108

5.2.2.4 Antenna/read point configurations 111
5.2.3 Installing/Mounting 111
5.2.3.1 Mounting/Installing FCC 112
5.2.4 Configuration/integration 113
5.2.4.1 Transmission protocols 114
5.2.5 Technical data 114
5.2.5.1 Mechanical data 114
5.2.5.2 Technical data according to EPC and ISO 116
5.2.5.3 Maximum number of readable tags 117
5.2.6 Dimension drawings 118
5.2.7 Certificates and approvals 118
5.2.7.1 Certificates and approvals for RF620R (FCC) 119
5.2.7.2 FCC information 120

5.3 RF630R reader 121
5.3.1 Description 121
5.3.1.1 Ordering data 122
5.3.1.2 Status display 123
5.3.1.3 Pin assignment of the RS422 interface 124
5.3.1.4 Pin assignment of the connecting cable 124
5.3.1.5 Grounding connection 125
5.3.2 Planning application 126
5.3.2.1 Minimum mounting clearances of two antennas of different readers 126
5.3.2.2 Antenna/read point configurations 126
5.3.3 Installing/Mounting 127
5.3.3.1 Mounting/Installation 127
5.3.4 Configuration/integration 128
5.3.4.1 Transmission protocols 129
5.3.5 Technical data 129
5.3.5.1 Mechanical data 129
5.3.5.2 Technical data according to EPC and ISO 131
5.3.5.3 Maximum number of readable tags 132
5.3.6 Dimension drawings 133
5.3.7 Certificates and approvals 134
5.3.7.1 FCC information 135
5.3.7.2 IC-FCB information 135

6 Antennas 137

6.1 RF660A antenna 137
6.1.1 RF660A description 137
6.1.2 Antenna pattern 138
6.1.3 Installation and assembly 141
6.1.3.1 Mounting with antenna mounting plate 142
6.1.3.2 Mounting with antenna mounting kit 144
6.1.4 Connecting an antenna to a reader 145
6.1.5 Technical specifications 147

6.2 Guidelines for selecting RFID UHF antennas 147
6.2.1 Note safety information 147
6.2.2 Introduction 148
6.2.2.1 About this documentation 148
6.2.3 General application planning 149
6.2.3.1 Overview of the total SIMATIC RF600 system and its influencing factors 149
6.2.3.2 Environmental conditions 150
6.2.3.3 General procedure 150
6.2.4 Antennas 151

6.2.4.1 Types of antenna and properties 151
6.2.4.2 Antenna parameters 151
6.2.5 Antenna cables 163
6.2.5.1 Selection criteria 163
6.2.5.2 Notes on use 165
6.2.6 Parameterization 166
6.2.6.1 Setting of parameters in the SIMATIC RF660R configuration software 166
6.2.7 Application example 168

7 Transponder/tags 171

7.1 Overview 171
7.1.1 Tags in different sizes and types 171
7.1.2 Mode of operation of transponders/tags 172
7.1.3 Transponder classes and generations 173
7.1.4 Electronic Product Code (EPC) 175

7.2 SIMATIC RF630L Smartlabel 177
7.2.1 Features 177
7.2.2 Minimum spacing between labels 178
7.2.3 Memory configuration for smart labels with MLFBs -00, -01, -02 178
7.2.4 Memory configuration for smart labels with MLFB -03 181
7.2.5 Ordering data 183
7.2.6 Technical data 183
7.2.7 Dimension drawings 186

7.3 SIMATIC RF620T 188
7.3.1 Characteristics 188
7.3.2 Ordering data 189
7.3.3 Planning the use 189
7.3.3.1 Reading range when mounted on non-metallic carriers 189
7.3.3.2 Directional radio pattern of the transponder on non-metallic surfaces 190
7.3.3.3 Optimum antenna/transponder positioning with plane mounting of the transponder on metal 193
7.3.3.4 Reading range on flat metallic carrier plates 194
7.3.3.5 Influence of conducting walls on the reading range 195
7.3.3.6 Directional radio pattern of the transponder on metallic surfaces 197
7.3.3.7 Reading range when mounted on ESD carrier materials 198
7.3.3.8 Communication with multiple transponders 199
7.3.4 Mounting instructions 200
7.3.5 Memory configuration 202
7.3.6 Technical Specifications 204
7.3.6.1 Mechanical data 204
7.3.6.2 Electrical data 204
7.3.6.3 Memory specifications 205
7.3.6.4 Environmental conditions 205
7.3.6.5 Chemical resistance of the transponder RF620T 206
7.3.7 Certificates and approvals 209
7.3.7.1 Certificates and approvals 209
7.3.8 Dimension drawing 210

7.4 SIMATIC RF630T 211
7.4.1 Characteristics 211
7.4.2 Ordering data 212
7.4.3 Planning application 212
7.4.3.1 Optimum antenna/transponder positioning with plane mounting of the transponder on metal 212
7.4.3.2 Reading range when mounted on flat metallic carrier plates 214

7.4.3.3 Influence of conducting walls on the reading range....215
7.4.3.4 Directional radiation pattern of the transponder....216
7.4.4 Mounting instructions....218
7.4.5 Memory configuration....219
7.4.6 Technical specifications....222
7.4.6.1 Mechanical data....222
7.4.6.2 Electrical data....222
7.4.6.3 Memory specifications....223
7.4.6.4 Environmental conditions....223
7.4.6.5 Chemical resistance of the transponder....224
7.4.7 Certificates and approvals....225
7.4.8 Dimension drawing....226

7.5 SIMATIC RF640T....227
7.5.1 Characteristics....227
7.5.2 Ordering data....228
7.5.3 Planning the use....229
7.5.3.1 Optimum antenna/transponder positioning with plane mounting of the transponder on metal....229
7.5.3.2 Reading range on flat metallic carrier plates....230
7.5.3.3 Influence of conducting walls on the reading range....231
7.5.3.4 Directional radiation pattern of the transponder....232
7.5.3.5 Reading range when mounted on non-metallic carriers....233
7.5.3.6 Use of the transponder in hazardous areas....233
7.5.3.7 Use of the transponder in hazardous areas for gases....234
7.5.3.8 Use of the transponder in hazardous areas for dusts....235
7.5.4 Mounting instructions....235
7.5.5 Technical Specifications....236
7.5.5.1 Mechanical data....236
7.5.5.2 Electrical data....236
7.5.5.3 Memory specifications....237
7.5.5.4 Environmental conditions....237
7.5.5.5 Chemical resistance of the RF640T transponder....238
7.5.6 Certificates and approvals....240
7.5.6.1 Manufacturer's declaration RF640T UHF Tool Tag Version 1....240
7.5.7 Dimension drawing....241

7.6 SIMATIC RF640T Gen 2....242
7.6.1 Characteristics....242
7.6.2 Ordering data....243
7.6.3 Planning the use....243
7.6.3.1 Optimum antenna/transponder positioning with plane mounting of the transponder on metal....243
7.6.3.2 Reading range when mounted on flat metallic carrier plates....244
7.6.3.3 Reading range when mounted on non-metallic carriers....245
7.6.3.4 Influence of conducting walls on the reading range....245
7.6.3.5 Directional radiation pattern of the transponder....246
7.6.3.6 Use of the transponder in the Ex protection area....247
7.6.3.7 Use of the transponder in hazardous areas for gases....248
7.6.3.8 Use of the transponder in hazardous areas for dusts....249
7.6.4 Mounting instructions....250
7.6.5 Memory configuration....251
7.6.6 Technical Specifications....254
7.6.6.1 Mechanical data....254
7.6.6.2 Electrical data....254
7.6.6.3 Memory specifications....255

7.6.6.4 Environmental conditions 255
7.6.6.5 Chemical resistance of the RF640T Gen 2 transponder 256
7.6.7 Certificates and approvals 258
7.6.7.1 Manufacturer's declaration RF640T Gen 2 UHF Tool Tag Version 1 258
7.6.8 Dimension drawing 259

7.7 SIMATIC RF680T 260
7.7.1 Characteristics 260
7.7.2 Ordering data 261
7.7.3 Planning the use 262
7.7.3.1 Reading range when mounted on non-metallic carriers 262
7.7.3.2 Directional radiation pattern of the transponder on non-metallic surfaces 263
7.7.3.3 Optimum antenna/transponder positioning with plane mounting of the transponder on metal 265
7.7.3.4 Reading range when mounted on plane metallic carrier plates 266
7.7.3.5 Influence of conducting walls on the reading range 267
7.7.3.6 Directional radiation pattern of the transponder on metallic surfaces 269
7.7.4 Mounting instructions 270
7.7.5 Memory configuration 271
7.7.6 Technical specifications 274
7.7.6.1 Mechanical data 274
7.7.6.2 Electrical data 274
7.7.6.3 Memory specifications 275
7.7.6.4 Environmental conditions 275
7.7.6.5 Chemical resistance of the RF680T transponder 276
7.7.7 Certificates and approvals 277
7.7.8 Dimension drawing 277

8 Integration into networks 279

8.1 Integration in IT networks 279
8.1.1 RF660R 279
8.1.2 Configuration of RF660R via XML 279
8.1.3 RF-MANAGER and PC integration of the RF620R/RF630R and RF660R readers 280
8.1.3.1 Tasks of RF-MANAGER 281
8.1.3.2 RF-MANAGER components 282
8.1.3.3 Hardware and system requirements for RF620R/RF630R operation 282
8.1.3.4 Connecting principle 283
8.1.3.5 Pin assignment for TRP-C06 interface converter 284
8.1.3.6 Pin assignment connector EX-42054-9-8S interface converter card 285
8.1.3.7 Number of readers 286
8.1.3.8 Set parameters 286
8.1.3.9 Operating modes 289
8.1.3.10 Supported tag types 289
8.1.3.11 Constraints 290

8.2 Integration in SIMATIC networks 291

9 System diagnostics 299

9.1 Error messages and flash codes for RF660R 299

9.2 Error messages and flash codes for RF620R/RF630R 300

10 Accessories 305

10.1 Wide-range power supply unit for SIMATIC RF systems 305
10.1.1 Features 305
10.1.2 Scope of supply 306
10.1.3 Ordering data 306

10.1.4 Safety Information 307
10.1.5 Connecting 309
10.1.6 Technical specifications 309
10.1.7 Pin assignment of DC outputs and mains connection 311
10.1.8 Dimension drawing 312
10.1.9 Certificates and approvals 313

A Appendix 315

A.1 Certificates and approvals 315

A.2 National regulations 318
A.2.1 Exceptions for certain regions in France 318

A.3 Service & Support 320

Glossary 323

Index 337

Introduction

1

1.1 Preface

Purpose of this document

This system manual contains the information needed to plan and configure the RF600 system.

It is intended both for programming and testing/debugging personnel who commission the system themselves and connect it with other units (automation systems, further programming devices), as well as for service and maintenance personnel who install expansions or carry out fault/error analyses.

Scope of this documentation

This documentation is valid for all supplied versions of the SIMATIC RF600 system and describes the state of delivery as of July 2009.

Conventions

The following terms/abbreviations are used synonymously in this document:

- Reader, write/read device
- Tag, transponder, mobile data memory, data carrier, SmartLabel
- Communication module, interface module

History

Edition	Note
11/2005	First edition
03/2006	2nd revised edition
04/2006	3rd revised and extended edition Details in the technical descriptions were revised.
06/2006	4th revised and extended edition
07/2008	5th revised and extended edition
11/2008	6th revised and extended edition: new RF620R and RF630R readers
07/2009	7th revised and extended edition: FCC approval RF620R/RF630R
10/2009	8th revised and expanded edition for multitag mode

Declaration of conformity

The EC declaration of conformity and the corresponding documentation are made available to authorities in accordance with EC directives. Your sales representative can provide these on request.

Observance of installation guidelines

The installation guidelines and safety instructions given in this documentation must be followed during commissioning and operation.

1.2 Navigating in the system manual

Structure of contents	Contents
Table of contents	Organization of the documentation, including the index of pages and chapters
Introduction	Purpose, layout and description of the important topics.
Safety Information	Refers to all the valid technical safety aspects which have to be adhered to while installing, commissioning and operating the product/system and with reference to statutory regulations.
System overview	Overview of all RF identification systems, system overview of SIMATIC RF600.
RF600 system planning	Information about possible applications of SIMATIC RF600, support for application planning, tools for finding suitable SIMATIC RF600 components.
Readers	Description of readers which can be used for SIMATIC RF600.
Antennas	Description of antennas which can be used for SIMATIC RF600.
Transponder/tags	Description of transponders which can be used for SIMATIC RF600.
Integration into networks	Integration of the RF600 reader to higher-level systems, control.
System diagnostics	Description of the flash codes and error codes of the reader.
Accessories	Connecting cable, wide-range power supply unit, technical data, ordering lists, dimension drawings
Appendix	Service and support, contact partners, training centers.
List of abbreviations	List of all abbreviations used in the document.

Safety Information

2

2.1 General safety instructions

⚠ CAUTION
Please observe the safety instructions on the back cover of this documentation.

SIMATIC RFID products comply with the salient safety specifications to VDE/DIN, IEC, EN, UL and CSA. If you have questions about the admissibility of the installation in the designated environment, please contact your service representative.

CAUTION
Alterations to the devices are not permitted. Failure to observe this requirement shall constitute a revocation of the radio equipment approval, CE approval and manufacturer's warranty.

Repairs

Repairs may only be carried out by authorized qualified personnel.

⚠ WARNING
Unauthorized opening of and improper repairs to the device may result in substantial damage to equipment or risk of personal injury to the user.

System expansion

Only install system expansion devices designed for this device. If you install other upgrades, you may damage the system or violate the safety requirements and regulations for radio frequency interference suppression. Contact your technical support team or where you purchased your device to find out which system expansion devices may safely be installed.

CAUTION
If you cause system defects by improperly installing or exchanging system expansion devices, the warranty becomes void.

2.2 Safety instructions for third-party antennas as well as for modifications to the RF600 system

Always observe the following general safety instructions before selecting a component from a different vendor:

The manufacturer accepts no responsibility for functional suitability or legal implications for the installation of third-party components.

NOTICE
Loss of radio equipment approvals
Alterations to the SIMATIC RF600 devices themselves are not permitted. Failure to observe this requirement shall constitute a revocation of the CE, FCC, UL, CSA radio equipment approvals and the manufacturer's warranty.

Modifications to the SIMATIC RF600 system

CAUTION
Damage to the system
If you install unsuitable or unapproved extensions, you may damage the system or violate the safety requirements and regulations for radio frequency interference suppression. Contact your technical support team or where you purchased your device to find out which system extensions may safely be installed.

CAUTION
Loss of warranty
If you cause defects on the SIMATIC RF600 system by improperly installing or exchanging system expansions, the warranty becomes void.

NOTICE
Loss of validity for type tests and certificates
SIMATIC RFID products comply with the salient safety specifications to VDE/DIN, IEC, EN, UL and CSA. When using RFID components which do not belong to the RF600 range of products, the validity of all type tests as well as all certificates relevant to the RF600 are canceled: CE, FCC, UL, CSA.

Note

User responsibility for modified product

As a user of the modified product, you accept responsibility for use of the complete RFID product comprising both SIMATIC RF600 components and third-party RFID components. This particularly applies to modification or replacement of:

- Antennas
- Antenna cables
- RF660R readers
- Power supply units with connection cables

2.3 Safety distance to transmitter antenna

2.3.1 Safety distance between transmitter antenna and personnel

For antenna configurations where it is possible to be briefly or constantly within the transmission range of the antennas, as in loading ramps, for example, minimum distances must be maintained.

Limits

The ICRP (International Commission of Radiological Protection) has worked out limit values for human exposure to HF fields that are also recommended by the ICNIRP (International Commission of Non Ionizing Radiological Protection). In German legislation on emissions (since 1997), the following limit values apply. These can vary according to frequency:

Frequency f [MHz]	Electrical field strength E [V/m]	Magnetic field strength H [A/m]
10 - 400	27,5	0,073
400 - 2.000	$1.375 \times f^{1/2}$	$0.0037 \times f^{1/2}$
2.000 - 300.000	61	0,16

The limit values for the 900 MHz reader antenna alternating field are thus:

Electrical field strength: E = 41.25 V/m

Magnetic field strength: H = 0.111 A/m

HF power density: E x H = 4.57 W/m^2

2.3.2 Minimum distance to antenna in accordance with ETSI

Minimum distance to antenna in accordance with ETSI (EU, EFTA, Turkey)

At a transmission frequency of 900 MHz, the wavelength of the electromagnetic wave λ is approximately 0.34 m. For distances less than 1 λ in the near field, the electrical field strength diminishes exponentially to the power three over distance, and for distances greater than 1 λ, it diminishes exponentially to the power two over distance.

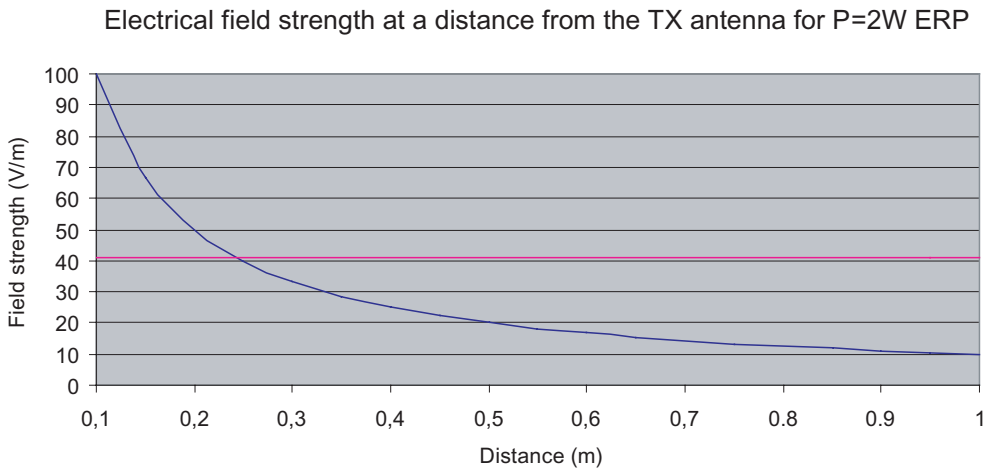

The horizontal line at 41.25V/m marks the "safety limit value".

For the maximum permisisble transmission power in accordance with ETSI (2W ERP), the "safety distance" d = 0.24 m. This means that personnel should not remain closer than 24cm to the transmitter antenna for extended periods (more than several hours without interruption). Remaining within the vicinity of the antenna for a brief period, even for repeated periods (at a distance < 0.24 m), is harmless according to current knowledge.

Distance to transmitter antenna [m]	Feld strength [V/m]	% of limit value
1	10	24
5	2	5

If the transmitter power is set lower than the highest permissible value (2 watts ERP), the "safety distance" reduces correspondingly.

The values for this are as follows:

Transmitter power ERP [W]	Safety distance to transmitter antenna [m]
1,0	0,17
0,5	0,12

2.3.3 Minimum distance to antenna in accordance with FCC (USA)

Minimum distance to antenna in accordance with FCC (USA)

For the maximum permisisble transmission power in accordance with FCC (4W EIRP), the "safety distance" d = 0.26 m. This means that personnel should not remain closer than 26cm to the transmitter antenna for extended periods (more than several hours without interruption). Remaining within the vicinity of the antenna for brief period, even repeated periods (at a distance < 0.26 m) is harmless to health according to current knowledge.

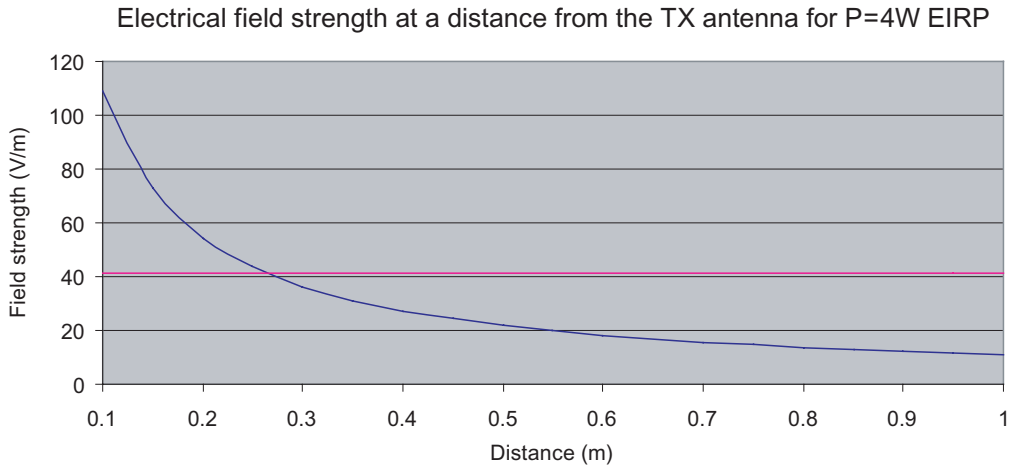

The horizontal line at 41.25 V/m marks the "safety limit value".

Distance to transmitter antenna [m]	Feld strength [V/m]	% of limit value
1	10,9	26
5	2,2	5,3

If the transmitter power is set lower than the highest permissible value (4 watts ERP), the "safety distance" reduces correspondingly.

The values for this are as follows:

Transmitter power ERP [W]	Safety distance to transmitter antenna [m]
2.0	0.185
0.5	0.13

System overview

3

3.1 RF System SIMATIC RF600

SIMATIC RF600 is an identification system that operates in the UHF range. UHF technology supports large write/read distances with passive tags.

The SIMATIC RF660-R readers (write/read devices), fitted for example on the gate of a warehouse, automatically record every movement of goods, and signal these to the host systems. The data are filtered and compressed there by data management software at the control level in order, for example, to generate the receiving department transaction for the ERP (Enterprise Resource Planning) system at the business administration control level. At the same time, the delivery can be automatically checked for correctness and completeness prior to storage by means of the electronic delivery list.

The general automation and IT structure of a company is shown in the following figure. This comprises several different levels that are described in detail below.

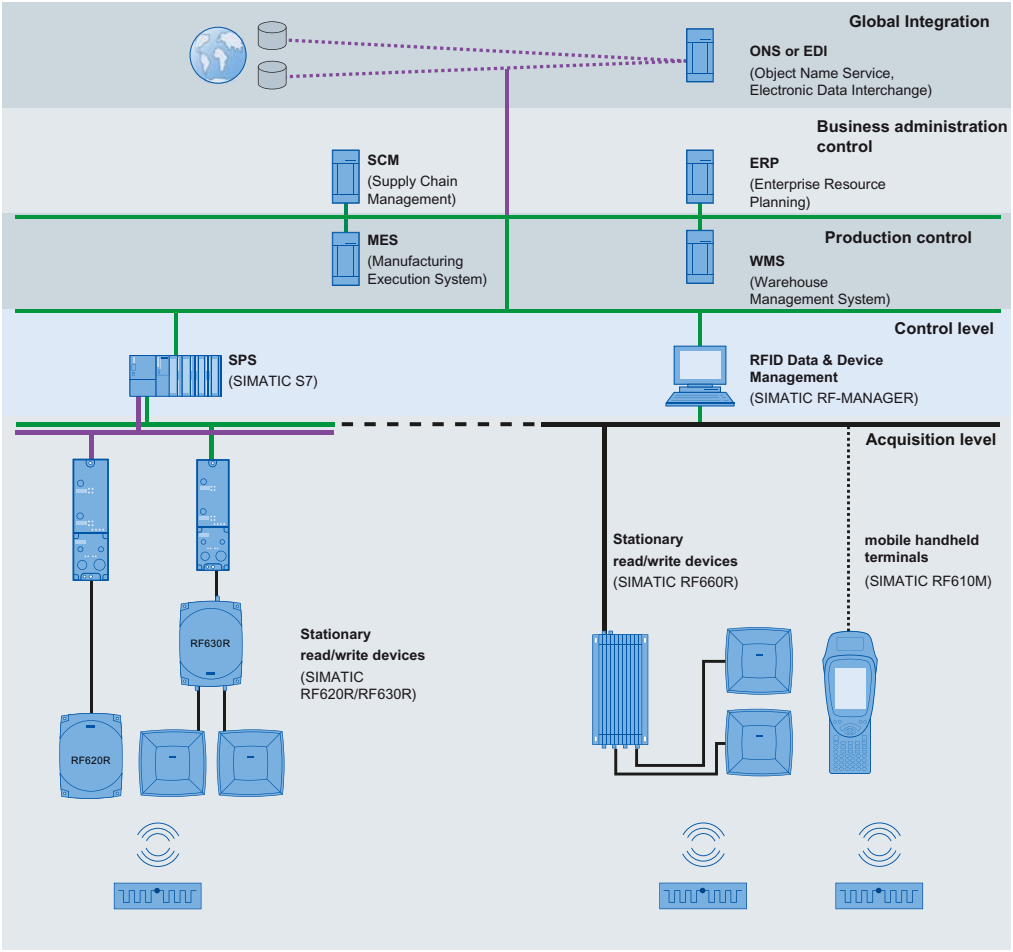

Figure 3-1 System overview of SIMATIC RF600

- Acquisition level
  This level contains the RFID readers that read the appropriate tag data and transfer them to the next highest level.
- Control level
  At the control level , the RFID data are collected, preprocessed and presented to the production control and business administration control levels for further processing.
- Production control
  The Manufacturing Execution System (MES) closes the gap between the data that arise in the automation environment (control level) and the logistical and commercial processes of the company (business administration control). MES solutions are used, for example, for defining and performing production processes.
- Business administration control
  This level covers planning and control of the equipment used. For this purpose, Enterprise Resource Planning (ERP) systems and Supply Chain Management (SCM) systems are used with modules for cost accounting, financial bookkeeping and personnel management.
- Global integration
  Product information can be exchanged here at an inter-company level. This can be performed over the Internet with the help of special services.

3.1.1 Application areas of RF600

RFID (radio frequency identification) permits interruption-free tracking and documentation of all delivered, stocked and shipped goods in the incoming goods, warehouse, production logistics and distribution departments. A small data medium - referred to as SmartLabel, transponder or tag - is attached to every item, package or pallet, and contains all important information. The data medium receives the power it requires via an antenna which is also used for data transmission.

3.1.2 System components (hardware/software)

RF600 products	Description
	Equipped with a rugged casing to the high IP 65 degree of protection and suitable for use over a wide range of temperatures, the SIMATIC RF660R reader is also a match for the demands of harsh industrial conditions in, for example, warehouses or on loading ramps.
	The RF620R reader creates with its connection to a SIMATIC controller optimum preconditions for production-related application scenarios and/or production-related logistics applications by RFID. It has an integrated circular polarized antenna. .
	The RF630R reader creates with its connection to a SIMATIC controller optimum preconditions for production-related application scenarios and/or production-related logistics applications by RFID. It has 2 connections for external antennas.
	SIMATIC RF610M expands the RF600 RF identification system with a powerful mobile reader for applications in the areas of logistics, production and service. In addition, it is an indispensable aid for startup and testing.
	Also the RF660A antennas are equipped for the harsh conditions in production and logistics environments due to their high IP67 degree of protection. Up to 4 antennas can be connected to the RF660R reader depending on the application and up to two can be connected to the RF630R reader.

RF600 products	Description
	The RF600 tag family offers the right solution for every application: The RF640T tool tag for industrial requirements is highly resistant to oils and can be directly mounted on metal. The RF620T container tag for industrial requirements is rugged and highly resistant to detergents. The RF630L Smart Labels made of plastic or paper can be used in many different applications: The application areas range from simple identification such as electronic barcode replacement/supplementation, through warehouse and distribution logistics, right up to product identification.
	SIMATIC RF-MANAGER manages the connected RFID readers, collects the supplied data and reduces them as required by the higher-level enterprise systems (e.g. MES/ERP). The SIMATIC RF-MANAGER is used for configuring, commissioning and operating RFID systems. It allows you to collect RFID data, to process it and to filter it. This data can be exchanged with an S7 PLC by means of variables or transferred to a higher-level management system. The RF-MANAGER supports you with quick and easy creation of RFID solutions as well as the administration of RFID systems and their hardware components. The application also offers extensive help with the preprocessing of RFID data.

3.1.3 Features

The RF600 identification system has the following performance features:

RFID system RF600	
Type	Contactless RFID (Radio Frequency IDentification) system in the UHF band

RF660R reader			
Transmission frequency	865-868 MHz (ETSI: EU; EFAT, Turkey) 869.5 MHz (ETSI SRD: EU, EFTA, Turkey) 902-928 MHz (FCC: USA) 920.125 - 924.875 MHz (FCC: CHINA)		
Write/read distance	EU, EFTA, Turkey: < 3.5 m USA: < 4 m China: < 4 m		
Standards	EPCglobal Class 1, Gen 1 EPCglobal Class 1, Gen 2 ISO 18000-6B		
Compatible data carriers	Tags / Smart Labels	Designation	Standards supported
	Smart Labels	RF620L RF630L	ISO 18000-6B, EPCglobal Class 1, Gen 2
	Container tag	RF620T	EPCglobal Class 1, Gen 2
	Powertrain tag	RF630T	EPCglobal Class 1, Gen 2
	Tool tag	RF640T	ISO 18000-6B
	Tool tag	RF640T (Gen 2)	EPCglobal Class 1, Gen 2
	Heat-resistant tag	RF680T	EPCglobal Class 1, Gen 2

RF620R reader (ETSI)			
Transmission frequency	865-868 MHz (EU, EFTA, Turkey)		
Write/read distance	0.1 - 2 m		
Standards	EPCglobal Class 1, Gen 2		
Compatible data carriers	Tags / Smart Labels	Designation	Standards supported
	Smart Labels	RF630L	EPCglobal Class 1, Gen 2
	Container tag	RF620T	EPCglobal Class 1, Gen 2
	Powertrain tag	RF630T	EPCglobal Class 1, Gen 2
	Tool tag	RF640T (Gen 2)	EPCglobal Class 1, Gen 2
	Heat-resistant tag	RF680T	EPCglobal Class 1, Gen 2

RF620R reader (FCC)			
Transmission frequency	902-928 MHz (USA) 920.125 - 924.875 MHz (CHINA)		
Write/read distance	USA: 0.1 - 2 m China: 0.1 - 2 m		
Standards	EPCglobal Class 1, Gen 2		
Compatible data carriers	**Tags / Smart Labels**	**Designation**	**Standards supported**
	Smart Labels	RF630L	EPCglobal Class 1, Gen 2
	Container tag	RF620T	EPCglobal Class 1, Gen 2
	Powertrain tag	RF630T	EPCglobal Class 1, Gen 2
	Tool tag	RF640T (Gen 2)	EPCglobal Class 1, Gen 2
	Heat-resistant tag	RF680T	EPCglobal Class 1, Gen 2

RF630R reader (ETSI)			
Transmission frequency	865-868 MHz (EU, EFTA, Turkey)		
Write/read distance	0.1 - 2 m		
Standards	EPCglobal Class 1, Gen 2		
Compatible data carriers	**Tags / Smart Labels**	**Designation**	**Standards supported**
	Smart Labels	RF630L	EPCglobal Class 1, Gen 2
	Container tag	RF620T	EPCglobal Class 1, Gen 2
	Powertrain tag	RF630T	EPCglobal Class 1, Gen 2
	Tool tag	RF640T (Gen 2)	EPCglobal Class 1, Gen 2
	Heat-resistant tag	RF680T	EPCglobal Class 1, Gen 2

RF630R reader (FCC)			
Transmission frequency	902-928 MHz (USA) 920.125 - 924.875 MHz (CHINA)		
Write/read distance	USA: 0.1 - 2 m China: 0.1 - 2 m		
Standards	EPCglobal Class 1, Gen 2		
Compatible data carriers	**Tags / Smart Labels**	**Designation**	**Standards supported**
	Smart Labels	RF630L	EPCglobal Class 1, Gen 2
	Container tag	RF620T	EPCglobal Class 1, Gen 2
	Powertrain tag	RF630T	EPCglobal Class 1, Gen 2
	Tool tag	RF640T (Gen 2)	EPCglobal Class 1, Gen 2
	Heat-resistant tag	RF680T	EPCglobal Class 1, Gen 2

RF610M mobile handheld terminal			
Transmission frequency	869.5 MHz (Europe SRD) 912.5-917.4 MHz (USA)		
Write/read distance	Europe < 0.75 m USA < 1 m		
Standards	EPCglobal Class 1, Gen 2 ISO 18000-6B		
Compatible data carriers	**Tags / Smart Labels**	**Designation**	**Standards supported**
	Smart Labels	RF620L, RF630L	ISO 18000-6B, EPCglobal Class 1, Gen 2
	Container tag	RF620T	EPCglobal Class 1, Gen 2
	Powertrain tag	RF630T	EPCglobal Class 1, Gen 2
	Tool tag	RF640T	ISO 18000-6B
	Tool tag	RF640T (Gen 2)	EPCglobal Class 1, Gen 2
	Heat-resistant tag	RF680T	EPCglobal Class 1, Gen 2

Data carrier/tags			
Version	**Tags / Smart Labels**	**Designation**	**Standards supported**
	Smart Labels	RF620L RF630L	ISO 18000-6B, EPCglobal Class 1, Gen 2
	Container tag	RF620T	EPCglobal Class 1, Gen 2
	Powertrain tag	RF630T	EPCglobal Class 1, Gen 2
	Tool tag	RF640T	ISO 18000-6B
	Tool tag	RF640T (Gen 2)	EPCglobal Class 1, Gen 2
	Heat-resistant tag	RF680T	EPCglobal Class 1, Gen 2
Standards	EPCglobal Class 1, Gen 1 EPCglobal Class 1, Gen 2 ISO 18000-6B		

Software	
RF-MANAGER 2008	PC software for • Uniform configuration of the RF660R and RF610M readers • Management and configuration of the connected readers • Preprocessing and evaluation of the RFID data • Interfacing to the higher-level enterprise system • Connection to SIMATIC S7 controller System requirements: Windows XP / SP2
RF660R configuration software	PC software for parameterizing the RF660R reader System requirements: Windows XP / SP1 or SP2

RF600 system planning

4

4.1 Overview

You should observe the following criteria for implementation planning:

- Possible system configurations
- Antenna configurations
- Environmental conditions for transponders
- The response of electromagnetic waves in the UHF band
- Regulations applicable to frequency bands
- EMC Directives

4.2 Possible system configurations

The SIMATIC RF600 system is characterized by a high level of standardization of its components. This means that the system follows the TIA principle throughout: Totally Integrated Automation. It provides maximum transparency at all levels with its reduced interface overhead. This ensures optimum interaction between all system components.

The RF600 system with its flexible components offers many possibilities for system configuration. This chapter shows you how you can use the RF600 components on the basis of various example scenarios.

4.2.1 Scenario for incoming goods

This example scenario shows the incoming goods bay of a warehouse. Pallets of goods are delivered through the incoming goods portal of a warehouse. Each pallet is equipped with a tag. The tags contain user data that provide information about the sender and receiver of the goods. These data are read out and routed on.

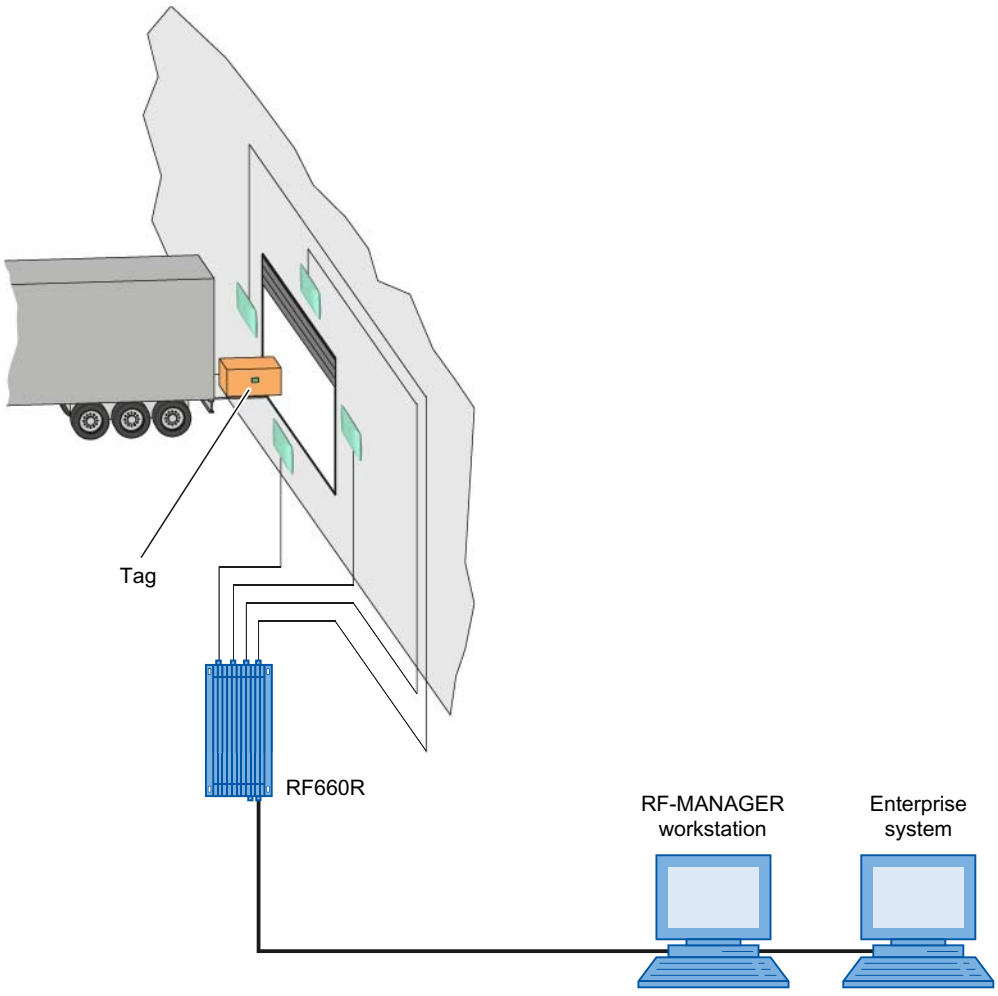

Figure 4-1 Incoming goods bay

Features of the scenario

In this example, the maximum number of 4 antennas of the SIMATIC RF660A type are connected to the SIMATIC RF660R reader. The four antennas are aligned with one read point and therefore form a portal that is to be monitored. The read distances depend on the size of the portal as well as the density of readers.

The tags in this scenario are Smart Labels of type SIMATIC RF630L. They are usually attached to a non-metallic base such as wooden crates or cartons, in which the goods are packed. The tags can be mounted in almost any position on the packaging or pallet.

The tags are read with the "Bulk reading" procedure in the incoming goods bay, i.e. a large number of items and many tags can be acquired at once. High read rates can be achieved in this manner.

The SIMATIC RF660R reader is connected to an RF-MANAGER workstation that is connected, in turn, to an enterprise system through an ALE interface. The tag data can be managed by means of the enterprise system.

Summary of the features

Note

Note that the following features show sample values for the scenario. The specific data for your application may deviate from these values.

Feature	
Single-tag	No
Multi-tag	Yes
Read velocity	2 m/s
Tag orientation	Not defined
Material characteristics	Non-metal
Read distances	Approx. 3,5 m
Reader density	High
Interference	High

4.2.2 Scenario for material handling control

This scenario shows a possible solution for monitoring and controlling the infeed of material to a production line. The objective is to provide the right material at the right time. This can be particularly useful in plants with frequently changing manufacturing scenarios for ensuring that incorrect infeed and downtimes are minimized.

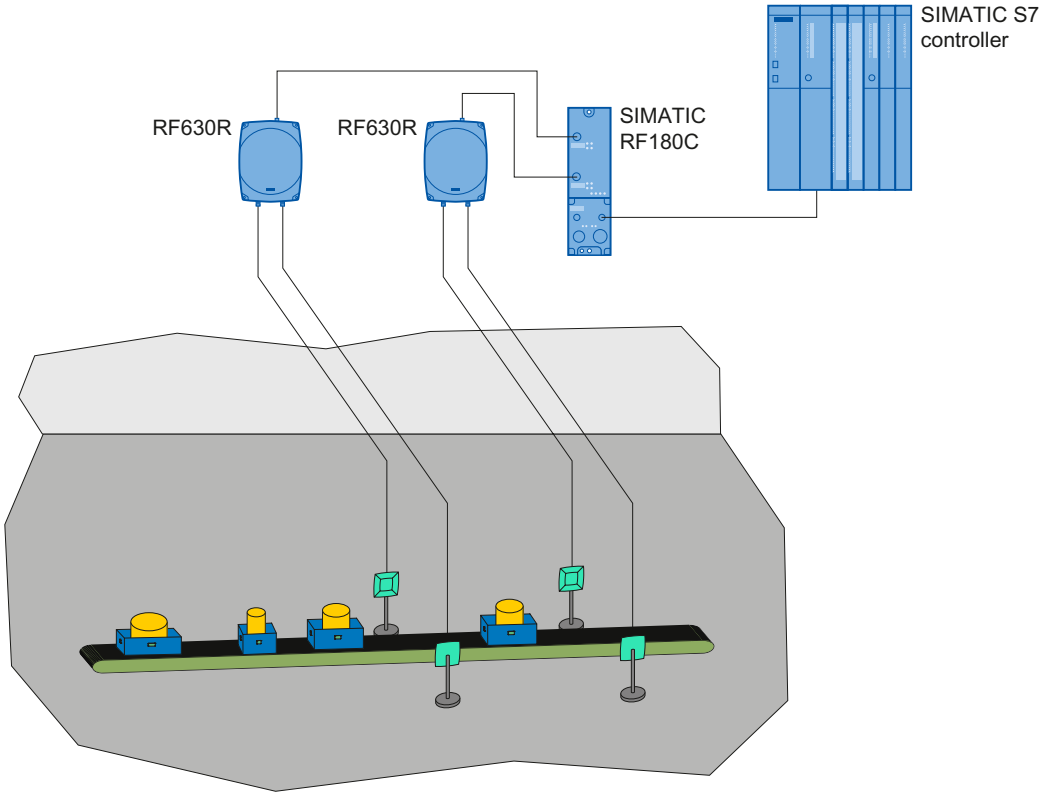

Features of the scenario

The conveyor moves different transport containers past the readers in an arbitrary alignment. The RFID tag is, however, always applied to the transport containers with the same alignment. The tags in this scenario are transponders of type SIMATIC RF620T.

The conveyor has a maximum width of 80 cm in this example. The transport velocity is up to 2 m/s. With this arrangement only a single RFID tag has to be detected each time (single-tag).

In this scenario a SIMATIC RF630R is used as the reader. Optimum reading reliability is ensured by two external antennas in a portal arrangement. The SIMATIC RF630R reader reads the information from the tags on the transport containers and transfers it via a communication module to the SIMATIC S7 controller which controls the process in accordance with the tag information.

Summary of the features

Note

Note that the following features show sample values for the scenario. The specific data for your application may deviate from these values.

Feature	
Single-tag	Yes
Multi-tag	No
Read velocity	Max. 2 m/s
Orientation of the RFID tag	Not defined
Carrier material of the tag	Metal or non-metal
Reading distance	Approx. 1 m
Reader density	High
Interference	High

4.2.3 Scenario for workpiece identification

A typical characteristic of modern manufacturing scenarios is their multitude of variations. The individual data and production steps are stored in the tag of a toolholder or product. These data are read by the machining stations during a production process and, if necessary, tagged with status information. This can be used to dynamically identify which production step is the next in the series. This has the advantage that the production line can work automatically without the need to access higher system components. The use of RFID therefore increases the availability of the plant.

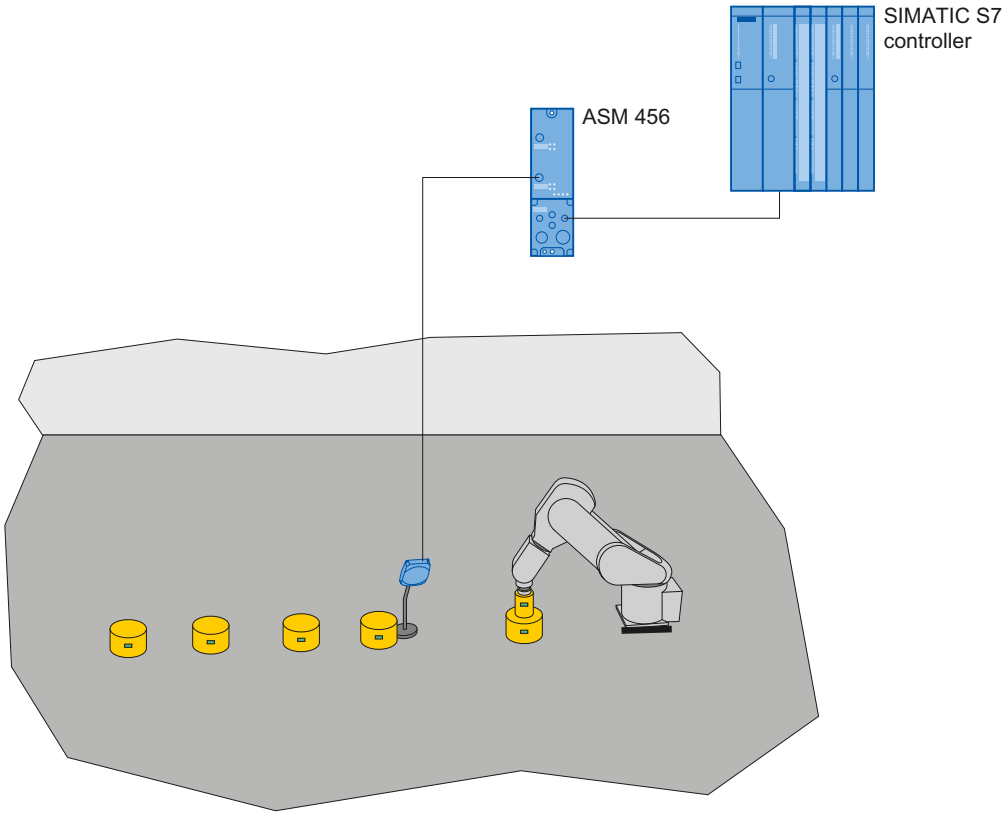

Features of the scenario

RFID tags are attached to workpiece holders. Their spatial orientation is always identical. With this arrangement, only a single tag has to be detected each time (single-tag). The tags in this scenario are transponders of type SIMATIC RF640T.

The SIMATIC RF620R reader reads the information from the tags with its integrated antenna and transfers it to the SIMATIC S7 controller via a communication module. Depending on the stored tag information, the SIMATIC-S7 performs different control tasks, for example, automatically providing a suitable tool for an industrial robot at the correct time.

Summary of the features

Note

Note that the following features show sample values for the scenario. The specific data for your application may deviate from these values.

Features	
Single-tag	Yes
Multi-tag	No
Reading velocity	Not applicable
Orientation of the RFID tag	Same alignment for all the tags
Carrier material of the tag	Metal
Reading distance	Approx. 1 m
Reader density	High
Interference	High

4.2.4 Scenario for Intra logistics

Intra logistics comprises all logistical procedures that are required on a production site as well as within the overall company. The main task of Intra logistics is to control the subsequent processes:

- Transporting goods from the incoming goods bay into the warehouse
- Management of stock
- Conveyance of goods from the warehouse for production
- Order picking
- Packing

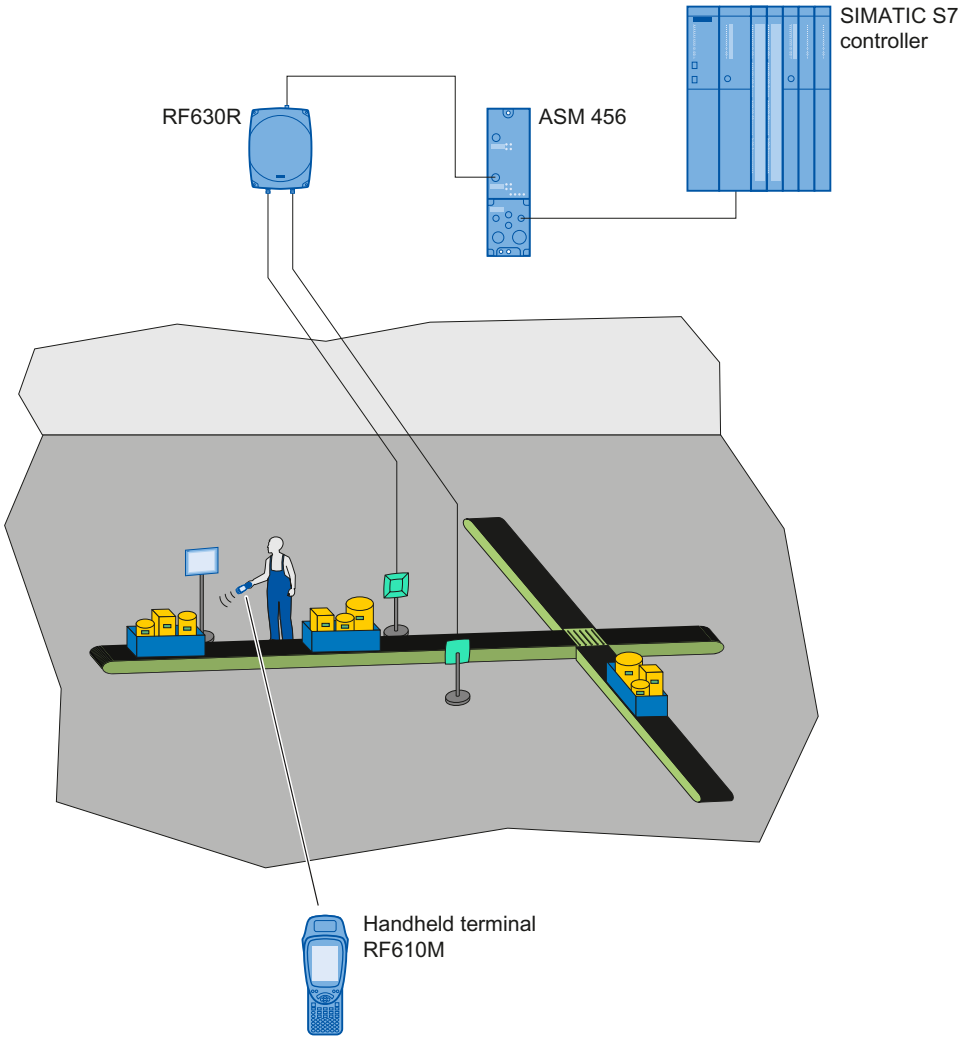

Features of the scenario

In this example scenario. items must be distributed to the correct storage location in a transport container via a separating filter. The RFID tags of type SIMATIC RF630L are directly attached to the item. The maximum transport velocity of the conveyor is 2 m/s.

In this scenario, bulk acquisition is necessary because several objects must be detected at the same time.

The SIMATIC RF630R reader uses two external antennas in a portal arrangement to read the information from the tags on the passing items and transfers it to the SIMATIC S7 controller via a communication module. The SIMATIC S7 controls the separating filter of the conveyor system depending on the tag information.

The SIMATIC RF610M mobile handheld terminal is used in this example for additional analysis and visualization of the item data directly on-site. The mobile handheld terminal can transfer the data to SIMATIC RF-MANAGER over the WLAN, and this then controls the separating filter via the SIMATIC S7 controller.

Summary of the features

Note

Note that the following features show sample values for the scenario. The specific data for your application may deviate from these values.

Features	
Single-tag	Yes
Multi-tag	No
Reading velocity	Max. 2 m/s
Orientation of the RFID tag	Same alignment for all the tags
Carrier material of the tag	Metal
Reading distance	Approx. 1 m
Reader density	High
Interference	High

4.2.5 Scenario for outgoing goods

This example scenario shows the outgoing goods area of a warehouse with two loading gates. Pallets are dispatched through the outgoing goods portals - each pallet is marked with a tag. These tags also contain user data that provide information about the sender and receiver of the goods. The data read by the readers are checked to ensure that the pallets are waiting at the correct outgoing goods portal. Depending on the read results of the reader, the outgoing portal opens, or it remains closed.

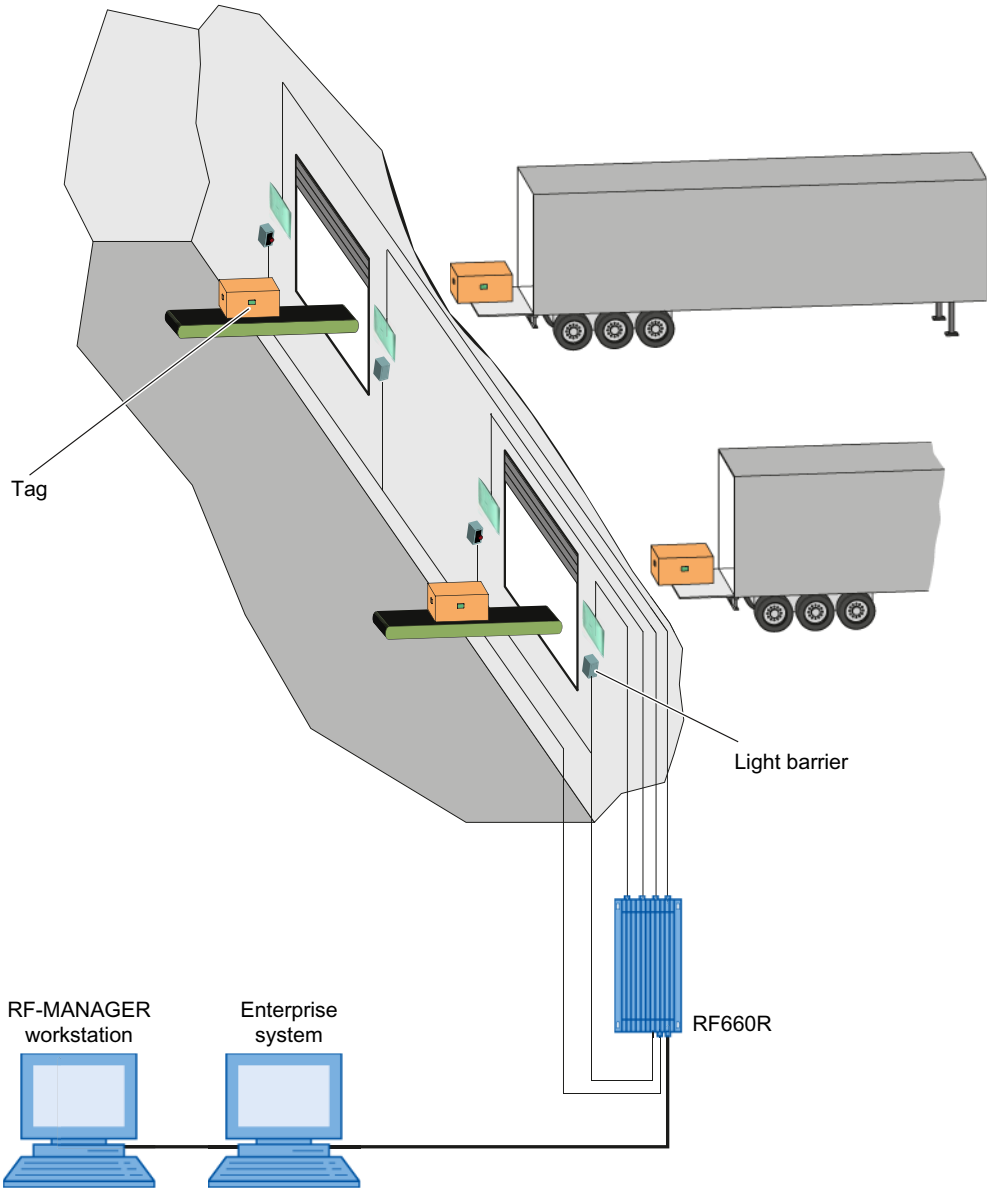

Figure 4-2 Outgoing goods

In this example, the maximum number of 4 antennas of the SIMATIC RF660A type are connected to the SIMATIC RF660R reader. The four antennas form two different read points and therefore monitor two loading gates. The read distances depend on the size of the portal as well as the density of readers.

The tags in this scenario are Smart Labels of type SIMATIC RF630L. They are usually attached to a non-metallic base such as wooden crates or cartons, in which the goods are packed. The tags can be mounted in almost any position on the packaging or pallet.

The tags are read with the "bulk reading" procedure at the outgoing goods gates, i.e. a large number of items and many tags can be acquired at once. High read rates can be achieved in this manner.

The SIMATIC RF660R reader is connected to an RF-MANAGER workstation that is connected, in turn, to an enterprise system through an ALE interface. The tag data can be managed by means of the enterprise system.

Summary of the features

Note

Note that the following features show sample values for the scenario. The specific data for your application may deviate from these values.

Feature	
Single-tag	No
Multi-tag	Yes
Read velocity	2 m/s
Tag orientation	Not defined
Material characteristics	Non-metal
Read distances	Approx. 3,5 m
Reader density	High
Interference	High

4.3 Antenna configurations

Note

Validity of antenna configuration

The following specifications for the antenna configuration only apply to the RF660A antenna. See Section Guidelines for selecting RFID UHF antennas (Page 147) for specifications for the configuration of third-party antennas.

See also

Parameterization (Page 166)

4.3.1 Antenna configuration example

The following diagram shows an application example for an antenna configuration of the RF660R. The antennas are positioned at the height at which the tags are expected which are to be identified. The maximum width of the portal that is recommended for reliable operation is 4 m.

The diagram shows a configuration with three antennas. Up to four antennas can be used depending on the local conditions.

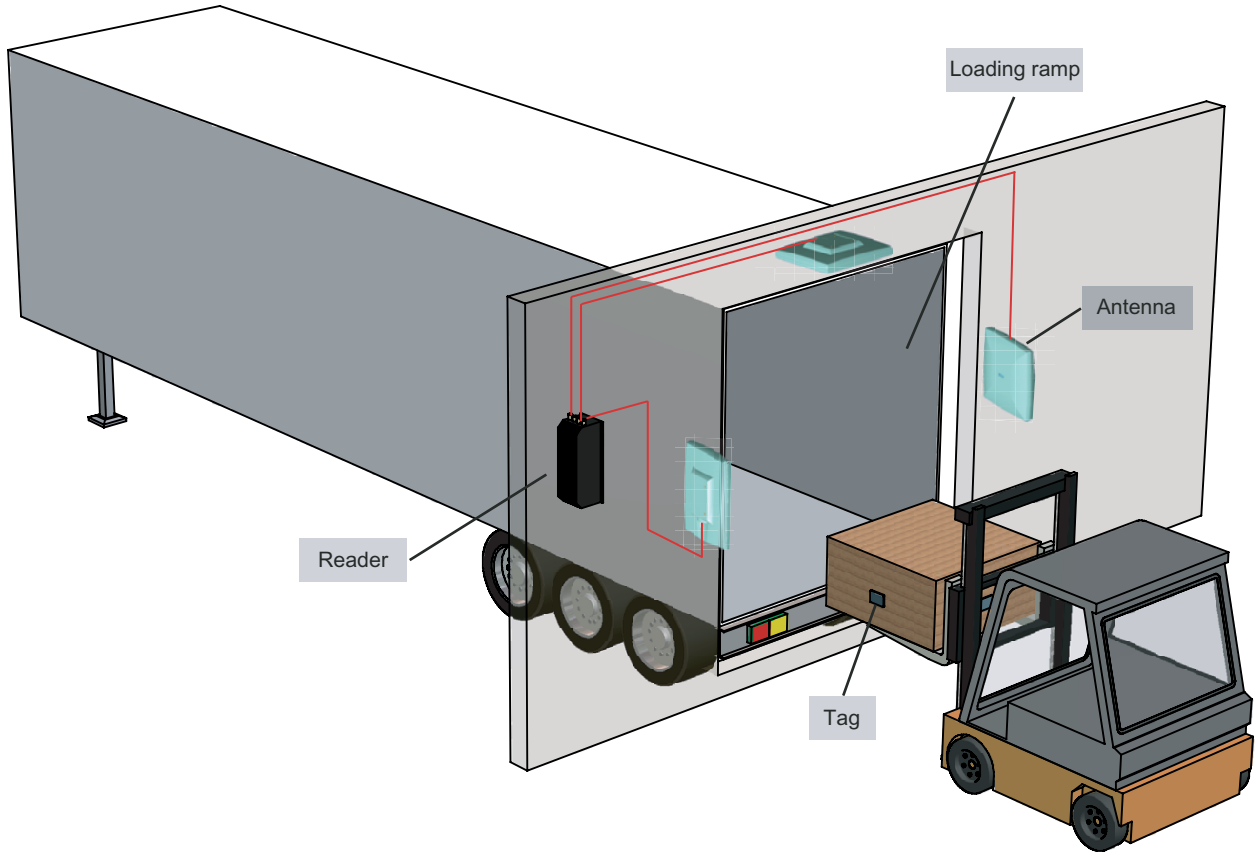

Figure 4-3 Example of an antenna configuration with three antennas.

4.3.2 Possibilities and application areas for antenna configurations

Some basic antenna configurations and possible fields of application are shown below. Please note for the possible configurations, that up to four external antennas can be connected to the RF660R reader and up to two external antennas can be connected to the RF630R reader. No external antennas can be connected to the RF620R reader. It has an integrated antenna.

Antenna configuration 1:	Description/ application areas
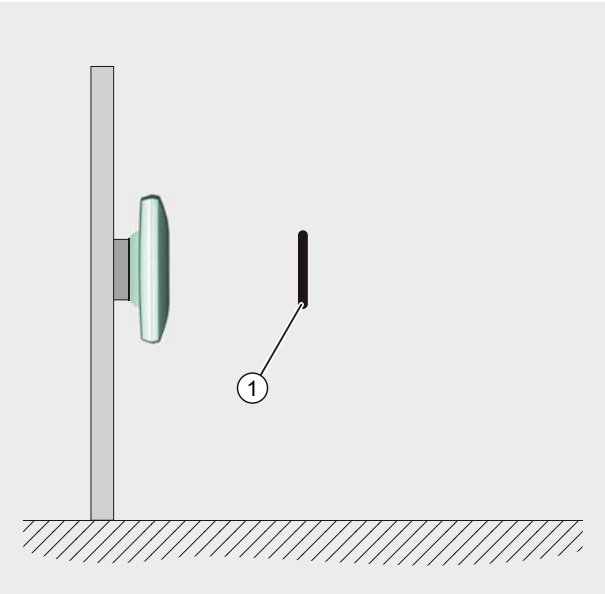	This arrangement of antennas is appropriate when the tags to be read are only located on one side of the goods to be acquired, for example, if a conveyor with passing goods has to be monitored during production and it is precisely defined on which side the tags to be read are attached. ① Tag This antenna configuration is possible with the following readers: • RF630R with one antenna • RF620R

Antenna configuration 2:	Description/ application areas
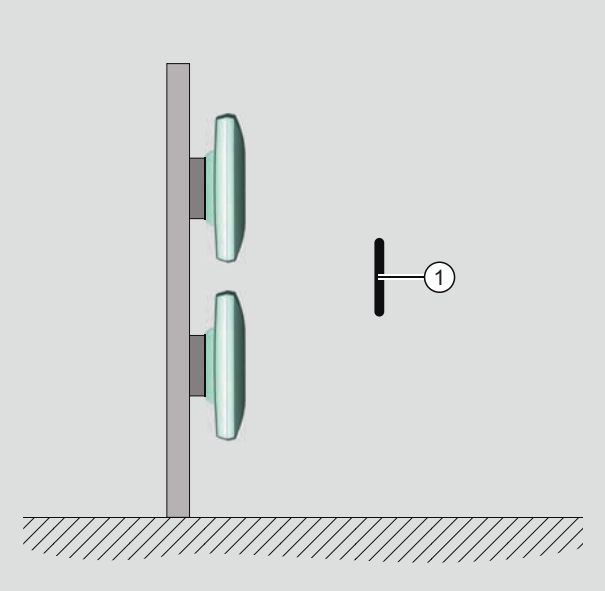	This arrangement of antennas is appropriate when the tags to be read are only located on one side of the items to be identified, e.g. when pallets are to be identified on which the tags to be read must be on a prespecified side. ① Tag This antenna configuration is possible with the following readers: • RF660R with two antennas • RF630R with two antennas

Antenna configuration 3:	Description/ application areas
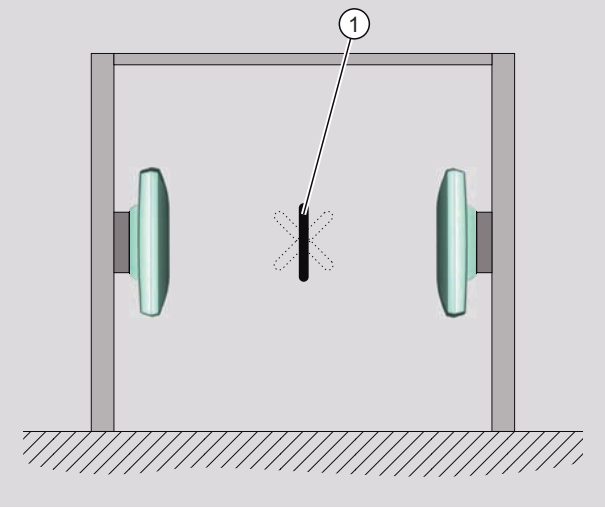	Preferred application: In the identification of goods in loading portals. The tag is located in the field of radiation of two antennas; for reliable tag reading, the height of the tag above floor level must therefore be known with reasonable accuracy. ① Tag This antenna configuration is possible with the following readers: • RF660R with two antennas • RF630R with two antennas

Antenna configuration 4:	Description/ application areas
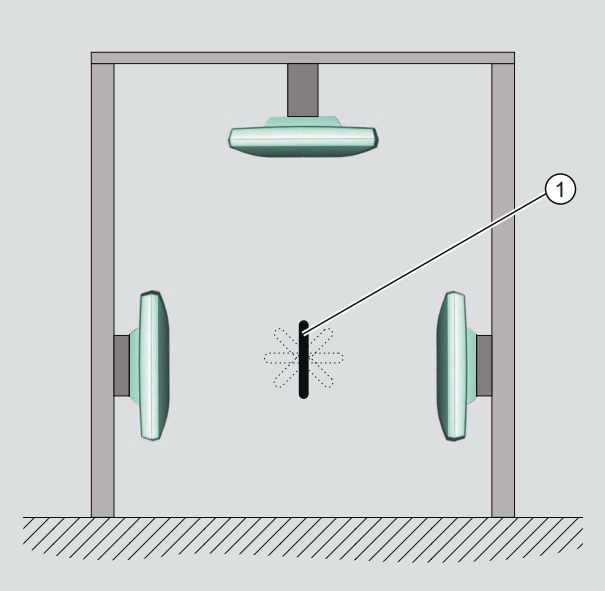	Preferred application: For the identification of goods at loading portals. Similar to configuration 2, but with additional reading reliability when the tag is at an angle to the vertical. ① Tag This antenna configuration is possible with the following readers: • RF660R with three antennas

Antenna configuration 5:	Description/ application areas
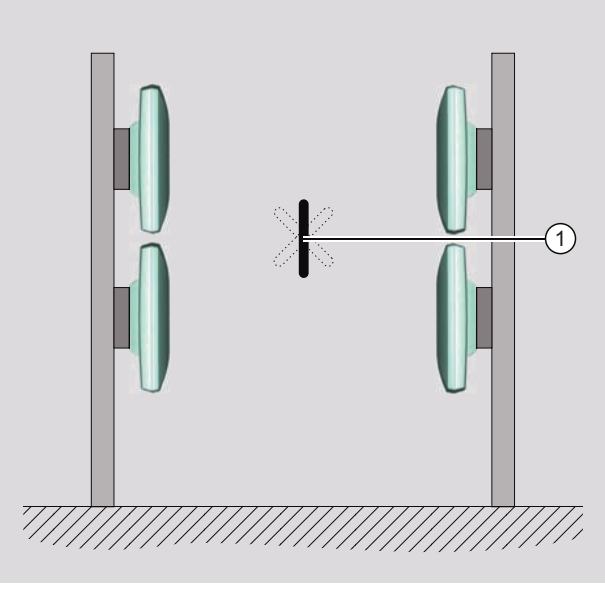	Preferred application: For the identification of goods at loading portals. The tag is located in the field of radiation of all four antennas, so the tag position can vary more than in configuration 2 for reliable tag identification. ① Tag This antenna configuration is possible with the following readers: • RF660R with four antennas

Antenna configuration 6:	Description/ application areas
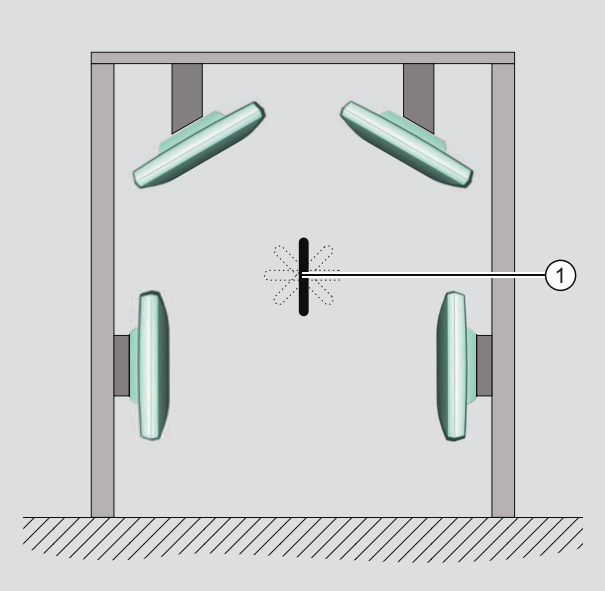	Preferred application: For the identification of goods at loading portals. Similar to configuration 4, but the reliability of tag identification is improved as a result of the four antennas at separate locations, so the tag position is not critical. ① Tag This antenna configuration is possible with the following readers: • RF660R with four antennas

Antenna configuration 7:	Description/ application areas
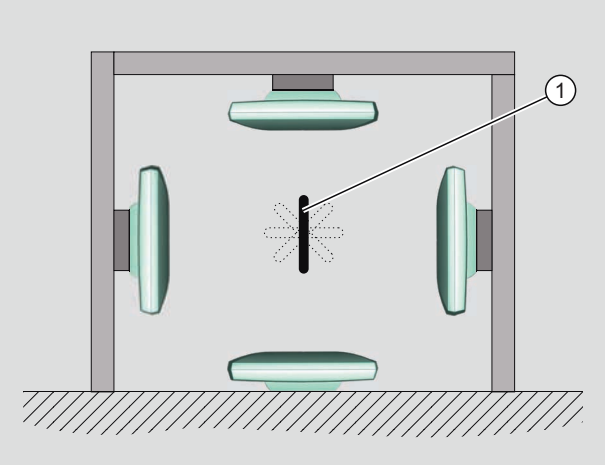	This tunnel configuration is suitable for conveyor belt applications. The goods with the tags to be read are moving forwards on a conveyor belt but the alignment of the tags relative to the antennas is not clearly defined. One of the antenna is located on the floor and radiates vertically upwards in the direction of the conveyor belt. A relatively high reading reliability is achieved due to the use of four antennas. ① Tag This antenna configuration is possible with the following readers: • RF660R with four antennas

4.3.3 Tag orientation in space

The alignment of the tag antenna to the antenna of the reader affects the reading range. For maximum performance and to achieve the maximum reading range, the tag antenna should therefore be aligned in parallel with the reader antenna:

Parallel tag alignment	Large reading range
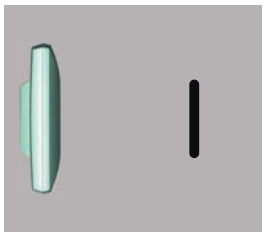	Maximum probability of identification of tags.

Vertical tag alignment	Minimal reading range
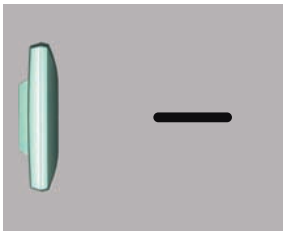	Minimum probability of identification of tags.

4.3.4 Specified minimum and maximum spacing of antennas

Specified minimum spacing of antennas

The following diagram shows the specified minimum and maximum spacings for mounting antennas:

A minimum spacing of 50 cm is necessary between the antenna and liquids or metals. The distance between the antenna and the floor should also be at least 50 cm.

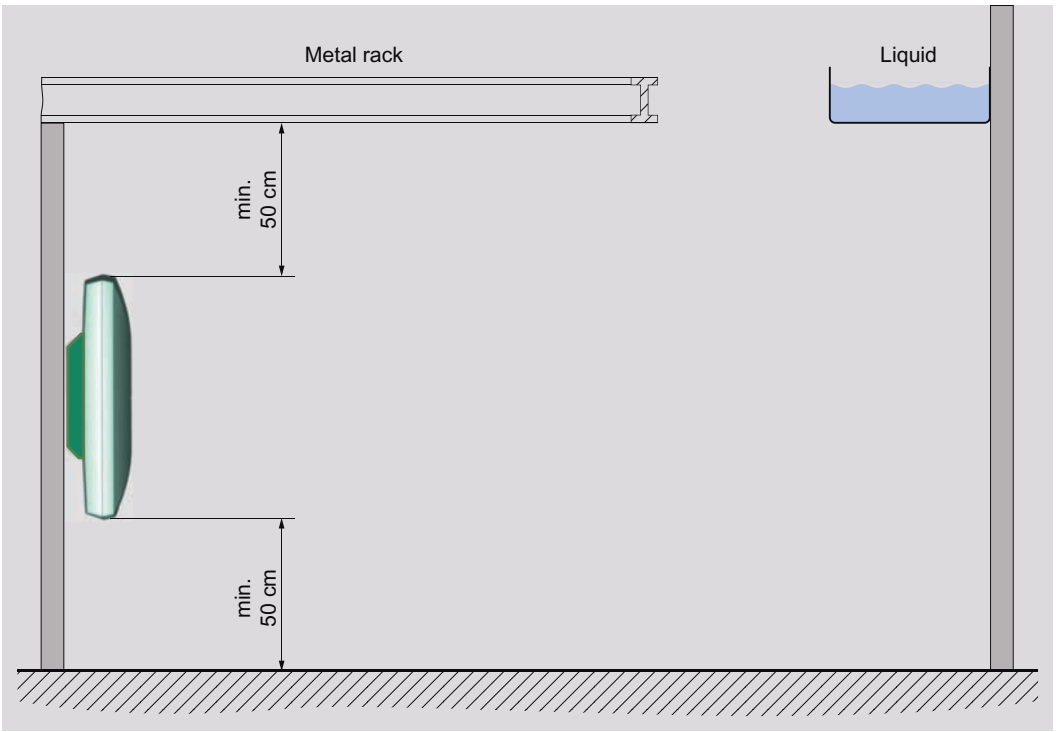

Figure 4-4 Minimum distance to the environment

The distance between two antennas mounted alongside each other or one above the other should be at least 20 cm, but a distance of more than 50 cm is better.

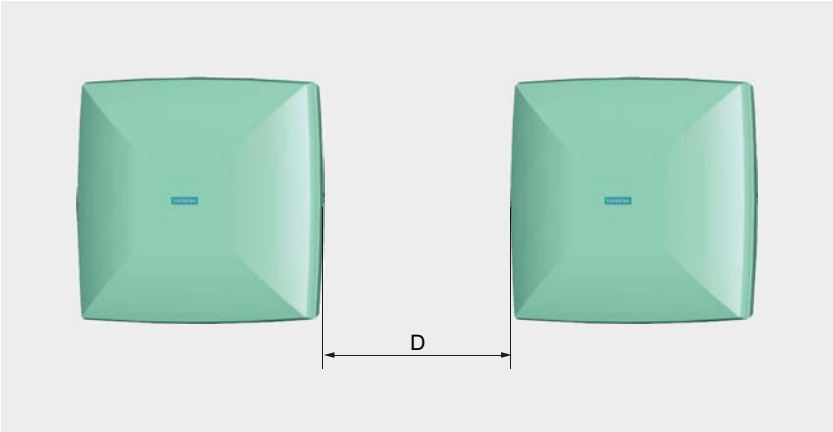

Figure 4-5 Antennas mounted adjacently horizontally or vertically

Readers	Distance D
RF660R with RF660A	20-50 cm
RF630R with RF660A	20-50 cm
RF620R	3 m

The minimum distance between antennas mounted alongside each other or one above the other depends on the transmit power of the reader and the sensing range of the tags.

For a portal configuration, the maximum distance between two antennas that are connected to the same reader is 8 m.

Figure 4-6 Portal configuration, maximum distance

Readers	Maximum distance D
RF660R with RF660A	8 m*
RF630R with RF660A	4 m

*) A portal spacing of up to 10 m is possible. The probability of a read must be checked.

The specified distances are recommended minimum or maximum values for configuration.

4.3.5 Mutual interference of readers (antennas)

Using more than one reader

When several RFID readers are used, there is a danger that RFID tags can also be read by other readers. It must be ensured that the tag can only be identified by the appropriate reader.

Technical faults between readers then occur particularly when they transmit on the same channel (on the same frequency).

To prevent this, the RF660R reader uses the "listen before talk" technique in Europe or "frequency hopping" between many different channels in the USA and China.

4.3.6 Reading range

The reading range between the reader (antenna) and the transponder is affected by the following factors:

The reading range depends on	Description
Transmit power of the reader	The higher the transmit power of the reader, the larger the reading range.
Tag size and type	The larger the tag antenna, the larger the power input area and therefore the larger the reading range.
Absorption factor of the materials	The higher the absorption of the surrounding material, the smaller the reading range.
Production quality of the tag	The better the tag has been matched to the operating frequencies during manufacturing, the greater the reading range.
Reflection characteristics of the environment	In a multiple-reflection environment (e.g., in rooms with reflecting surfaces, machinery, or concrete walls), the reading range can be significantly higher than in a low-reflection environment.

You will find detailed information about the reading range of the individual readers in Section in the Appendix.

4.3.7 Operation of several readers within restricted space

4.3.7.1 Dense Reader Mode

A special operating mode for Gen 2 tags enables several RF600 readers to be operated without interference in close proximity to each other. This applies to all RF600 readers: RF660R, RF630R and RF620R.

Dense Reader Mode (DRM)

In this mode, tag readability is increased through the application of interference-reducing measures.

DRM is only defined for Gen 2 and does not function with other tag types.

Operating principle

Dense Reader Mode allows physically adjacent readers to use the same frequency when Gen 2 tags are being used.

In accordance with EPC Global as well as ETSI EN 302 208 V1.1.2, only the even channels are used for transmitting in this mode (communications path Reader -> Tag) with the RF660R; the tag response is on the odd channels as a result of the frequency offset. In accordance with EPC Global as well as ETSI EN 302 208 V1.2.1, the four transmit channels are used for transmission with the RF620R/RF630R (see Section Regulations for UHF frequency bands in Europe (ETSI EN 302 208 V1.2.1) (Page 62)) and the tag response appears on all channels. As a result of the large difference in level between the transmitter channels and the tag response channels, this technology provides great advantages for frequency reuse. However, a prerequisite is that a certain minimum distance, and thus minimum decoupling, is observed between the antennas of adjacent readers.

Antenna alignment and distances

The minimum distance required between antennas that use the same frequency and that are connected to different readers depends on the maximum transmit power set (RF660R with RF660A = 2 W; RF620R/RF630R = 500 mW) and the antenna alignment.

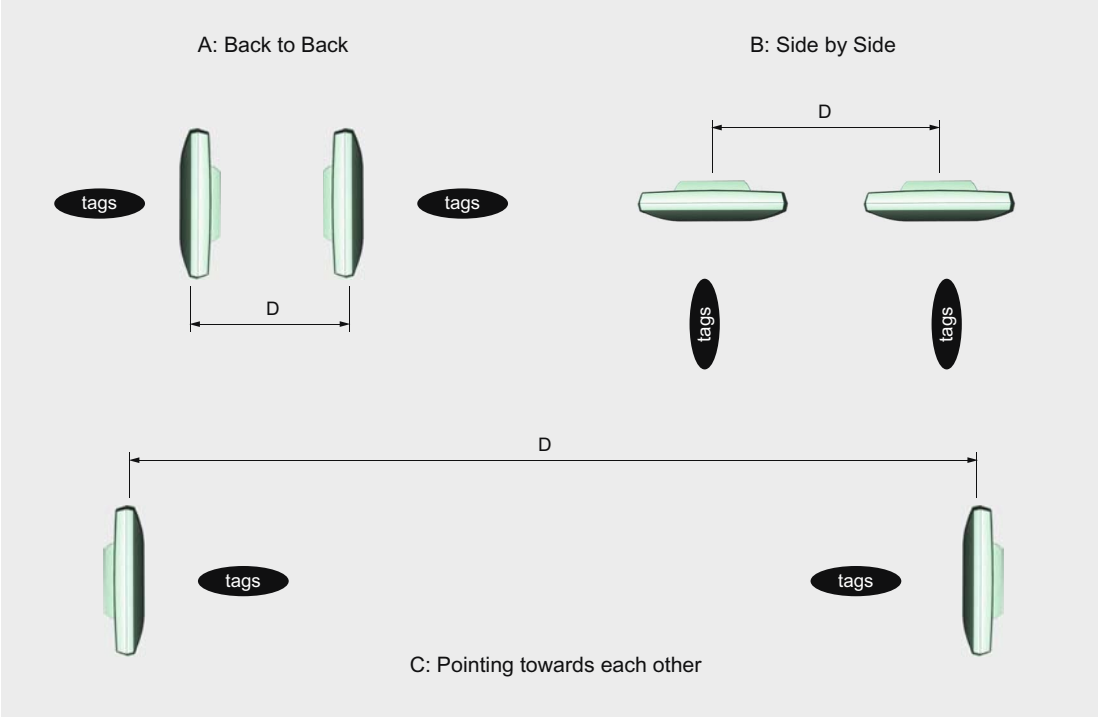

Figure 4-7 Antenna distances for different readers and identical frequencies

Antenna configuration	Antenna alignment	Minimum distance required = D RF660R with RF660A	Minimum distance required = D RF620R	Minimum distance required = D RF630R with RF660A
A	With backs to each other	1 m	2 m	4.5 m
B	Arranged laterally	2 m	1.2 m	1.5 m
C	Antennas point toward each other	5 m	54 m	30 m

4.3.7.2 Optimizing tag reading accuracy

A further improvement in the tag reading accuracy in an environment with a high density of readers can be achieved by orienting the antennas toward the respective tag field, i.e. by rotating them horizontally and vertically.

In addition, the transmitter power of the readers can be reduced down to the minimum at which the tags are still just detected accurately.

This greatly reduces the probability of interference.

4.3.7.3 Optimization of robustness of tag data accesses for readers that are operated simultaneously

Parameter data access reliability

If several readers are to be operated simultaneously in an environment, then the following settings affect the reliability of the reader's access to transponder data:

- Electromagnetic environment (see Chapter The response of electromagnetic waves in the UHF band (Page 57))
- Type of transponder (see chapter Transponder/tags (Page 171))
- Number of transponders to be detected by an antenna at a time
- Type of antenna (see Chapter RF660A antenna (Page 137), Chapter Guidelines for selecting RFID UHF antennas (Page 147), and Chapter Planning application (Page 105))
- Transponders' distance from and orientation toward antennas (see Chapter Transponder/tags (Page 171))
- Distances and orientation of antennas of different readers to each other
- Radiated power of antennas

The robustness of tag data accesses is improved for readers whenever distances to adjacent readers are increased, radiated power is reduced, and a channel plan (for ETSI readers) is implemented. Adjacent readers are parameterized in the channel plan such that they cannot use the same channels.

A channel plan can be created for ETSI readers; for FCC readers, it is assumed that the probability of two readers accidentally using the same channel is very low.

SIMATIC RF620R reader

The RF620R has an integrated, circular polarized antenna. This means that the type of antenna cannot be freely selected.

Note

Rotation of the reader through 90° around the z axis

Since the horizontal electrical opening angle of the RF620R antenna is greater than the vertical electrical opening angle, the effects on adjacent readers can be reduced by rotating the reader through 90° around the z axis (see coordinate diagram in Chapters Antenna diagram for RF620R (ETSI) (Page 105) and Antenna diagram for RF620R (FCC) (Page 108)).

SIMATIC RF630R reader with SIMATIC RF660A antenna

The electrical opening angles (vertical and horizontal) of the RF660A antenna are identical. Therefore, the robustness of the readers' access to transponder data cannot be optimized further by rotating them around the antenna axis.

Example

- The antennas are placed next to each other and are aligned in parallel (see arrangement B in Chapter Dense Reader Mode (Page 51)).
- Radiated power is limited to 27 dBm (ERP) or 500 mW (ERP).
- The RF620R readers have been rotated through 90° around the z axis.

In addition, the following characteristics are to be fulfilled:

- Length of data to be read/written on the transponder: 99.99%
- Length of data to be read/written on the transponder: 512 bits (64 bytes)
- Transponder type RF630L (6GT2810-2AB03)

The table below provides an overview of the minimum distances to be observed depending on the radiated power and maximum possible number of transponders if the above-named requirements must be fulfilled:

Mode	Max. number of tags	Radiated power dBm (ERP)/ mW (ERP)	Min. distance [m] between two RF620R readers	Min. distance [m] between two RF660A antennas operated with RF630R readers	Min. distance [m] from an RF620R of an RF660A antenna operated with an RF630R reader
Single tag mode: Read	1	27 dBm (ERP)/ 500 mW (ERP)	3	3	3
Single tag mode: Write	1	27 dBm (ERP)/ 500 mW (ERP)	3	3	3
Multitag mode: Read	40	27 dBm (ERP)/ 500 mW (ERP)	6	6	6
Multitag mode: Write	10	27 dBm (ERP)/ 500 mW (ERP)	6	6	6

4.3.7.4 Frequency hopping

This technique should prevent mutual interference between readers. The reader changes its transmission channel in a random or programmed sequence (FHSS).

Procedure for FCC

The 50 available channels mean that the probability is low that two readers will be operating on the same frequency (see Section Regulations for UHF frequency bands in the USA (Page 66)). In China, one reader operates on at least 2 channels, e.g. 16 channels of 2 W (see Section Regulations for UHF frequency bands in China (Page 68)).

Procedure for ETSI

Frequency hopping is optional here. According to ETSI EN 203 208 V1.2.1, frequency hopping is however recommended to ensure that the reader does not have to pause for 100 ms after 4 seconds.

4.3.7.5 Listen before talk

With this technique which is only applicable to ETSI, the reader checks whether the relevant channel is assigned before transmission to prevent collisions. The reader will only transmit when this channel is free. The reader can transmit for up to 4 seconds on this channel and must then either pause for at least 100 milliseconds or jump immediately to an unassigned channel where it can transmit for another 4 seconds.

With the new ETSI EN 302 208 standard V1.2.1 this technique must be not be used (see Chapter Regulations for UHF frequency bands in Europe (ETSI EN 302 208 V1.1.2) (Page 60) and Chapter Regulations for UHF frequency bands in Europe (ETSI EN 302 208 V1.2.1) (Page 62)).

4.4 Environmental conditions for transponders/tags

4.4.1 Basic rules

The transponder/tag must not be placed directly on metal surfaces or on containers of liquid. For physical reasons, a minimum distance must be maintained between the tag antenna and conductive material. A minimum distance of 5 cm is recommended. The tag operates better when the distance is greater (between 5 and 20 cm).

- Tag assembly on non-conductive material (plastic, wood) has a tendency to be less critical than assembly even on poorly conductive material.
- The best results are achieved on the materials specified by the tag manufacturer.
- You can obtain more detailed information from the tag manufacturer.

4.5 The response of electromagnetic waves in the UHF band

4.5.1 The effect of reflections and interference

Reflections and interference

Electromagnetic waves in the UHF band behave and propagate in a similar manner to light waves, that is they are reflected from large objects such as ceilings, floors, walls and windows and interfere with each other. Due to the nature of electromagnetic waves, interference can lead to wave amplification which can produce an increased reading range. In the worst case, interference can also result in waves being extinguished which causes holes in reader coverage.

Reflections can also be beneficial when they cause electromagnetic waves to be routed around objects to a certain extent (deflection). This can increase the reading probability.

Due to these electromagnetic characteristics, it is extremely difficult in the multiple-reflection environment that is usually found in the real environment on site, to determine propagation paths and field strengths for a particular location.

Reducing the effect of reflections/interference on tag identification

- Reducing the transmit power:
  To reduce interference to a minimum, we recommend that the transmitter power of the reader is reduced until it is sufficient for an identification rate of 100%.
- Increasing the number of antennas to 3 or 4:
  More antennas in a suitable antenna configuration can prevent gaps in reader coverage.

4.5.2 Influence of metals

Metal can have an effect on the electromagnetic field depending on the arrangement or environment. The effect ranges from a hardly determinable influence through to total blocking of communication. The term metal in this context also includes metallized materials that are either coated with metal or shot through with metal to such an extent that UHF radiation cannot penetrate or only to a minimal extent.

The effect of metal on the electromagnetic field can be prevented as follows:

- Do not mount tags on metal.
- Do not place metallic or conducting objects in the propagation field of the antenna and transponder.

Tags mounted directly onto metal

In general, tags must not be mounted directly onto metallic surfaces. Due to the nature of the magnetic field, a minimum distance must be maintained between the tag antenna and conductive materials. For further details on the special case of attaching transponders to electrically conducting materials, see Section SIMATIC RF620T Operating Instructions (Page 188) and SectionSIMATIC RF640T Operating Instructions (Page 227) .

In the case of transponders that are not designed for mounting on metallic materials, the minimum permissible distance from metal is 5 cm. The larger the distance between the transponder and the metallic surface, the better the function of the transponder.

4.5.3 Influence of liquids and non-metallic substances

Non-metallic substances can also affect the propagation of electromagnetic waves.

When non-metallic substances or objects are located in the propagation field that can absorb UHF radiation, these can alter the antenna field depending on their size and distance and can even extinguish the field entirely.

The high-frequency damping effect of water and materials with a water content, ice and carbon is high. Electromagnetic energy is partly reflected and absorbed.

Liquids and petroleum-based oils have low HF damping. Electromagnetic waves penetrate the liquid and are only slightly weakened.

4.5.4 Influence of external components

The R&TTE guideline and the relevant standards govern the electromagnetic compatibility requirements. This also concerns the external components of the RF600 system. Even though the requirements for electromagnetic compatibility have been specified, various components will still interfere with each other.

The performance of the RF600 system is highly dependent on the electromagnetic environment of the antennas.

Reflections and interference

On the one hand, antenna fields will be weakened by absorbing materials and reflected by conducting materials. When electromagnetic fields are reflected, the antenna field and reflecting fields overlap (interference).

External components in the same frequency band

On the other hand, external components can transmit on the same frequency band as the reader. Or the external components can transmit in different frequency bands with side bands that overlap with the frequency band of the reader. This results in a reduction of the "signal-to-noise" ratio which reduces the performance of an RF600 system.

If a DECT station that is transmitting in the 2 GHz band, for example, is located in the receiving range of an antenna of the RF600 system, the performance of the write and read accesses to the transponder will be affected.

4.6 Regulations applicable to frequency bands

The following section describes the regulations for frequency bands which apply in different regions with reference to RFID. It presents the definition of the applicable standard, the precise channel assignments as well as the applicable technique.

4.6.1 Regulations for UHF frequency bands in Europe

4.6.1.1 Regulations for UHF frequency bands in Europe (ETSI EN 302 208 V1.1.2)

Regulations for frequency bands according to EN 302 208 V1.1.2

ETSI (European Telecommunications Standards Institute)

Specifications of European standard EN 302 208 V1.1.2:

- UHF band: 865 to 868 MHz
- Radiant power: max. 2 W (ERP)
- Channel bandwidth: 200 kHz
- Number of channels: 15
- Listen Before Talk

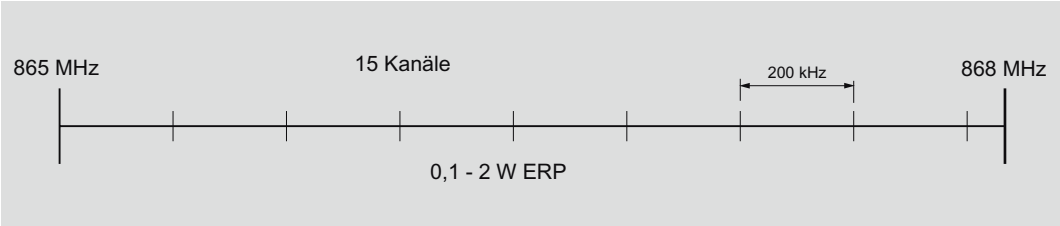

Channel assignment

- The UHF band from 865 to 868 MHz is subdivided into three sub bands:

Sub bands	Frequency band	Power
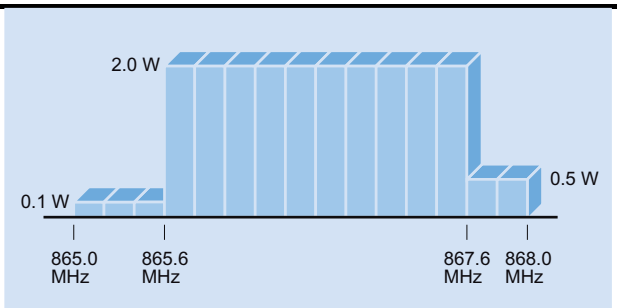	865.0 to 865.5 MHz	0.1 W ERP
	865.6 to 867.6 MHz	2.0 W ERP
	867.6 to 868.0 MHz	0.5 W ERP

Validity

Note that readers with this setting may only be sold until December 31, 2009. Readers sold with this setting before December 31, 2009 may continue to be used after that date.

Listen Before Talk

With this technique, the reader checks whether the relevant channel is assigned before transmission to prevent collisions. The reader will only transmit when this channel is free. The reader can transmit for up to 4 seconds on this channel and must then either pause for at least 100 milliseconds or jump immediately to an unassigned channel where it can transmit for another 4 seconds.

4.6.1.2 Regulations for UHF frequency bands in Europe (ETSI EN 302 208 V1.2.1)

This revision of the standards EN 302 208 also supports RFID systems with many readers that are operating simultaneously. Within the frequency spectrum, 4 exclusive RFID channels have been defined. The procedure "Listen Before Talk" must no longer be used.

Regulations for frequency bands according to EN 302 208 V1.2.1

ETSI (European Telecommunications Standards Institute)

Specifications of European standard EN 302 208:

- UHF band: 865…868 MHz
- Radiant power: max. 2 W (ERP)
- Channel bandwidth: 200 KHz, channel spacing 600 kHz
- Number of channels: 4
  - 865.7
  - 866.3
  - 866.9
  - 867.5

Channel assignment

- The UHF band from 865 to 868 MHz with 4 RFID channels occupies:

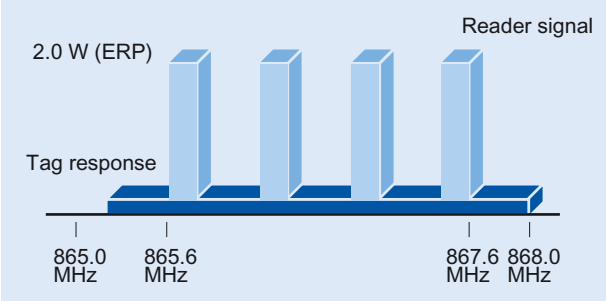

Validity

Note that readers may be operated with this setting since November 4, 2008 (publication of the standard in the Official Journal of the European Union).

4.6.1.3 Regulations for frequency bands according to EN 300 220 (short range device)

For those countries in which the RFID directive according to EN 302 208 has not yet been implemented, this alternative exists which is based on the older "Short range device" directive:

EN 300 220 (short range device)	
Frequency band, assigned	869.4– 869.65 MHz
Frequency used	869.50 MHz
Transmit power	Max. 0.5 W ERP
Duty cycle (frequency assignment period)	10% (6 minutes per hour)

4.6.1.4 Partial abrogation of the regulations for France

A decision from the European Commission of May 16, 2007 refers to a temporary, partial abrogation of the regulations for frequency bands in accordance with EN 302 208 that will only apply until 2010. According to this, the sub frequency band 865.5 MHz – 867.6 MHz will be limited to a maximum transmitted power of 0.5 W ERP when the RF600 system is operated within certain zones in France. These zones are defined in the annex to the decision of the commission and can be referred to in the appendix (Page 318).

Channel assignment according to ETSI EN 302 208 V1.1.2

The UHF band from 865 to 868 MHz is subdivided into two sub bands:

Sub bands	Frequency band	Power
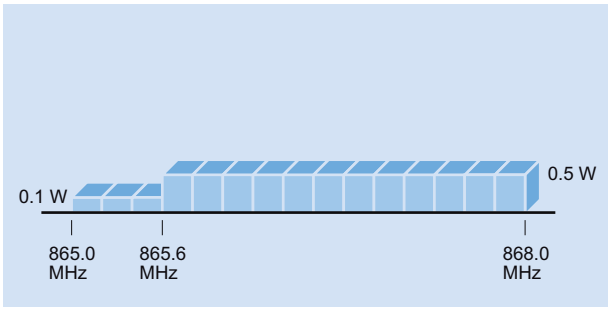	865.0 to 865.5 MHz	0.1 W ERP
	865.6 to 868.0 MHz	0.5 W ERP

Validity

Note that readers with this setting may only be sold until December 31, 2009. Readers sold with this setting before December 31, 2009 may continue to be used after that date.

Channel assignment according to ETSI EN 302 208 V1.2.1

The UHF band now only contains four permanently assigned frequencies on which the reader can transmit as per the 4-channel plan (see Chapter Regulations for UHF frequency bands in Europe (ETSI EN 302 208 V1.2.1) (Page 62)).

Sub bands	Frequency band	Power
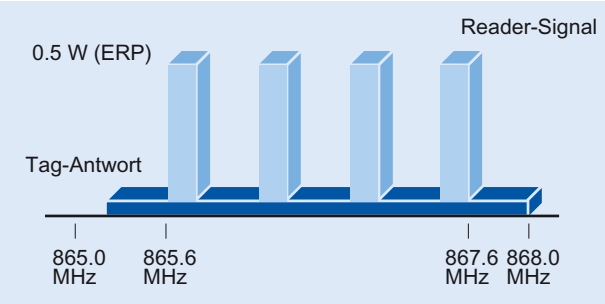	865.7 866.3 866.9 867.5	0.5 W ERP

Validity

Note that readers may be operated with this setting since November 4, 2008 (publication of the standard in the Official Journal of the European Union).

4.6.2 Regulations for UHF frequency bands in the USA

FCC (Federal Communications Commission)

- UHF band: 902 to 928 MHz
- Radiant power: max. 4 W (EIRP)
- Number of channels: 50
- Frequency hopping

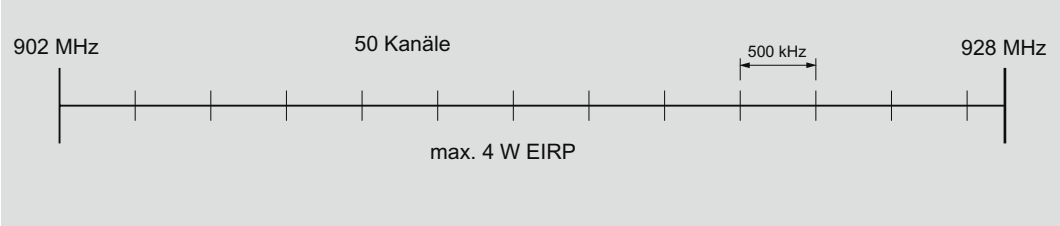

Frequency hopping

This technique should prevent mutual interference between readers. The reader changes its transmission channel in a random or programmed sequence (FHSS). The 50 available channels mean that the probability is low that two readers will be operating on the same frequency.

4.6.3 Regulations for UHF frequency bands in Thailand

FCC (Federal Communications Commission)

- UHF band: 920.25 to 924.75 MHz
- Radiant power: max. 4 W (EIRP)
- Number of channels: 10
- Frequency hopping, dwell time 2 seconds per channel

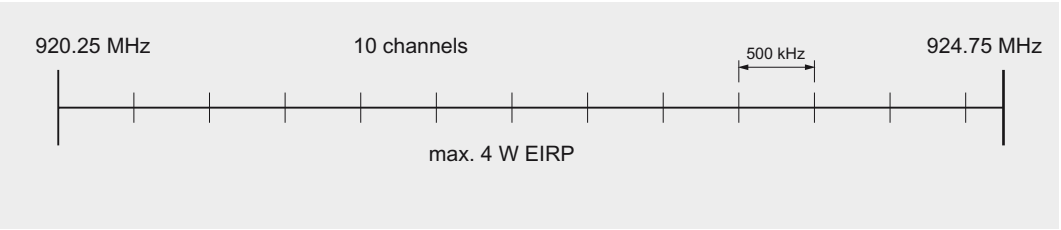

Frequency hopping

This technique should prevent mutual interference between readers. The reader changes its transmission channel in a random or programmed sequence (FHSS). 10 available channels mean that the probability is low that two readers will be operating on the same frequency.

4.6.4 Regulations for UHF frequency bands in China

Regulations for UHF frequency bands in China

FCC (Federal Communications Commission)

- UHF band: 920.125 to 924.875 MHz in 250 kHz channel blocks.
- Radiant power: max. 2 W (ERP)
- Number of channels: 16 to max. 2 W (ERP), 20 to max. 0.1 W (ERP)
- Frequency hopping

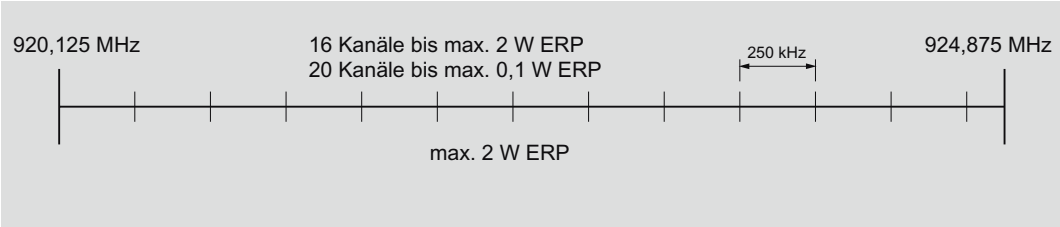

Channel assignment

Sub bands	Frequency band	Power
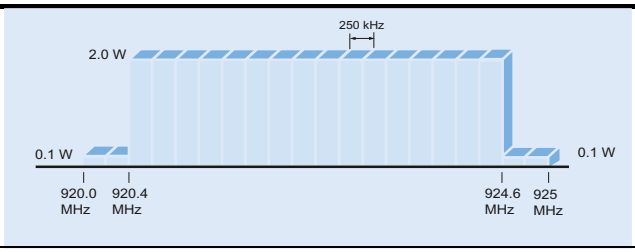	920.125 to 920.375 MHz	0.1 W ERP
	920.625 to 924.375 MHz	2.0 W ERP
	924.625 to 924.875 MHz	0.1 W ERP

Frequency hopping

This technique should prevent mutual interference between readers. The reader changes its transmission channel in a random or programmed sequence (FHSS). With 16 available channels that can be used simultaneously at up to 2000 mW (ERP) and with 20 channels that can be used simultaneously at up to 100 mW, the probability of two readers operating on the same frequency is reduced.

4.7 Guidelines for electromagnetic compatibility (EMC)

4.7.1 Overview

These EMC Guidelines answer the following questions:

- Why are EMC guidelines necessary?
- What types of external interference have an impact on the system?
- How can interference be prevented?
- How can interference be eliminated?
- Which standards relate to EMC?
- Examples of interference-free plant design

The description is intended for "qualified personnel":

- Project engineers and planners who plan system configurations with RFID modules and have to observe the necessary guidelines.
- Fitters and service engineers who install the connecting cables in accordance with this description or who rectify defects in this area in the event of interference.

NOTICE
Failure to observe notices drawn to the reader's attention can result in dangerous conditions in the plant or the destruction of individual components or the entire plant.

4.7.2 What does EMC mean?

The increasing use of electrical and electronic devices is accompanied by:

- Higher component density
- More switched power electronics
- Increasing switching rates
- Lower power consumption of components due to steeper switching edges

The higher the degree of automation, the greater the risk of interaction between devices.

Electromagnetic compatibility (EMC) is the ability of an electrical or electronic device to operate satisfactorily in an electromagnetic environment without affecting or interfering with the environment over and above certain limits.

EMC can be broken down into three different areas:

- Intrinsic immunity to interference:
  immunity to internal electrical disturbance
- Immunity to external interference:
  immunity to external electromagnetic disturbance
- Degree of interference emission:
  emission of interference and its effect on the electrical environment

All three areas are considered when testing an electrical device.

The RFID modules are tested for conformity with the limit values required by the CE and RTTE guidelines. Since the RFID modules are merely components of an overall system, and sources of interference can arise as a result of combining different components, certain guidelines have to be followed when setting up a plant.

EMC measures usually consist of a complete package of measures, all of which need to be implemented in order to ensure that the plant is immune to interference.

Note

The plant manufacturer is responsible for the observance of the EMC guidelines; the plant operator is responsible for radio interference suppression in the overall plant.

All measures taken when setting up the plant prevent expensive retrospective modifications and interference suppression measures.

The plant operator must comply with the locally applicable laws and regulations. They are not covered in this document.

4.7.3 Basic rules

It is often sufficient to follow a few elementary rules in order to ensure electromagnetic compatiblity (EMC).

The following rules must be observed:

Shielding by enclosure

- Protect the device against external interference by installing it in a cabinet or housing. The housing or enclosure must be connected to the chassis ground.
- Use metal plates to shield against electromagnetic fields generated by inductances.
- Use metal connector housings to shield data conductors.

Wide-area ground connection

- Bond all passive metal parts to chassis ground, ensuring large-area and low-HF-impedance contact.
- Establish a large-area connection between the passive metal parts and the central grounding point.
- Don't forget to include the shielding bus in the chassis ground system. That means the actual shielding busbars must be connected to ground by large-area contact.
- Aluminium parts are not suitable for ground connections.

Plan the cable installation

- Break the cabling down into cable groups and install these separately.
- Always route power cables, signal cables and HF cables through separated ducts or in separate bundles.
- Feed the cabling into the cabinet from one side only and, if possible, on one level only.
- Route the signal cables as close as possible to chassis surfaces.
- Twist the feed and return conductors of separately installed cables.
- Routing HF cables:
  avoid parallel routing of HF cables.
- Do not route cables through the antenna field.

Shielding for the cables

- Shield the data cables and connect the shield at both ends.
- Shield the analog cables and connect the shield at one end, e.g. on the drive unit.
- Always apply large-area connections between the cable shields and the shielding bus at the cabinet inlet and make the contact with clamps.
- Feed the connected shield through to the module without interruption.
- Use braided shields, not foil shields.

Line and signal filter

- Use only line filters with metal housings
- Connect the filter housing to the cabinet chassis using a large-area low-HF-impedance connection.
- Never fix the filter housing to a painted surface.
- Fix the filter at the control cabinet inlet or in the direction of the source.

4.7.4 Propagation of electromagnetic interference

Three components have to be present for interference to occur in a system:

- Interference source
- Coupling path
- Interference sink

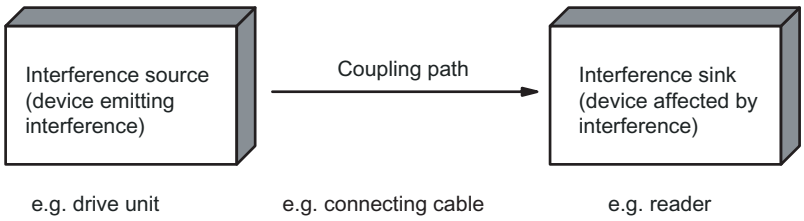

Figure 4-8 Propagation of interference

If one of the components is missing, e.g. the coupling path between the interference source and the interference sink, the interference sink is unaffected, even if the interference source is transmitting a high level of noise.

The EMC measures are applied to all three components, in order to prevent malfunctions due to interference. When setting up a plant, the manufacturer must take all possible measures in order to prevent the occurrence of interference sources:

- Only devices fulfilling limit class A of VDE 0871 may be used in a plant.
- Interference suppression measures must be introduced on all interference-emitting devices. This includes all coils and windings.
- The design of the system must be such that mutual interference between individual components is precluded or kept as small as possible.

Information and tips for plant design are given in the following sections.

Interference sources

In order to achieve a high level of electromagnetic compatibility and thus a very low level of disturbance in a plant, it is necessary to recognize the most frequent interference sources. These must then be eliminated by appropriate measures.

Table 4- 1 Interference sources: origin and effect

Interference source	Interference results from	Effect on the interference sink
Contactors, electronic valves	Contacts	System disturbances
	Coils	Magnetic field
Electrical motor	Collector	Electrical field
	Winding	Magnetic field
Electric welding device	Contacts	Electrical field
	Transformer	Magnetic field, system disturbance, transient currents
Power supply unit, switched-mode	Circuit	Electrical and magnetic field, system disturbance
High-frequency appliances	Circuit	Electromagnetic field
Transmitter (e.g. service radio)	Antenna	Electromagnetic field
Ground or reference potential difference	Voltage difference	Transient currents
Operator	Static charge	Electrical discharge currents, electrical field
Power cable	Current flow	Electrical and magnetic field, system disturbance
High-voltage cable	Voltage difference	Electrical field

What interference can affect RFID?

Interference source	Cause	Remedy
Switched-mode power supply	Interference emitted from the current infeed	Replace the power supply
Interference injected through the cables connected in series	Cable is inadequately shielded	Better cable shielding
	The reader is not connected to ground.	Ground the reader
HF interference over the antennas	caused by another reader	• Position the antennas further apart. • Erect suitable damping materials between the antennas. • Reduce the power of the readers. Please follow the instructions in the section *Installation guidelines/reducing the effects of metal*

Coupling paths

A coupling path has to be present before the disturbance emitted by the interference source can affect the system. There are four ways in which interference can be coupled in:

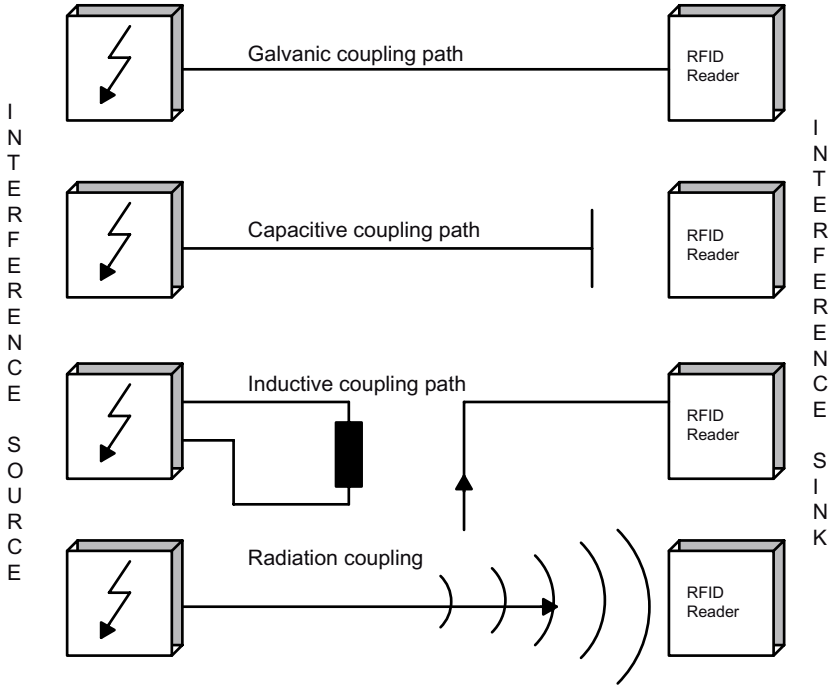

Figure 4-9 Ways in which interference can be coupled in

When RFID modules are used, different components in the overall system can act as a coupling path:

Table 4- 2 Causes of coupling paths

Coupling path	Invoked by
Conductors and cables	• Incorrect or inappropriate installation • Missing or incorrectly connected shield • Inappropriate physical arrangement of cables
Control cabinet or housing	• Missing or incorrectly wired equalizing conductor • Missing or incorrect earthing • Inappropriate physical arrangement • Components not mounted securely • Unfavorable cabinet configuration

4.7.5 Prevention of interference sources

A high level of immunity to interference can be achieved by avoiding interference sources. All switched inductances are frequent sources of interference in plants.

Suppression of inductance

Relays, contactors, etc. generate interference voltages and must therefore be suppressed using one of the circuits below.

Even with small relays, interference voltages of up to 800 V occur on 24 V coils, and interference voltages of several kV occur on 230 V coils when the coil is switched. The use of freewheeling diodes or RC circuits prevents interference voltages and thus stray interference on conductors installed parallel to the coil conductor.

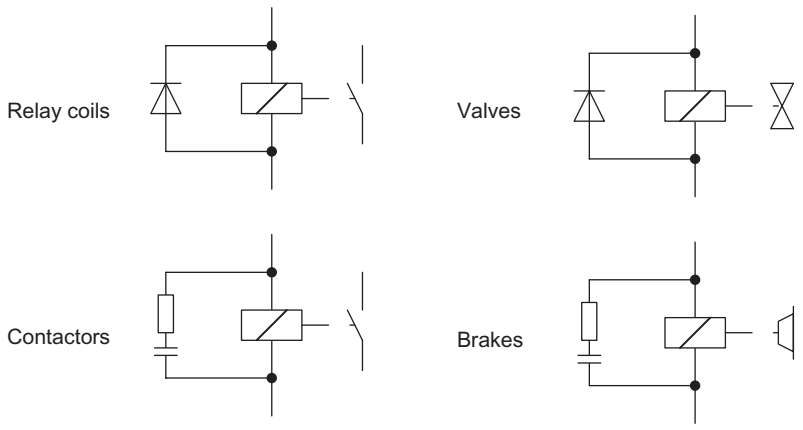

Figure 4-10 Suppression of inductance

Note

All coils in the cabinet should be suppressed. The valves and motor brakes are frequently forgotten. Fluorescent lamps in the control cabinet should be tested in particular.

4.7.6 Equipotential bonding

Potential differences between different parts of a plant can arise due to the different design of the plant components and different voltage levels. If the plant components are connected across signal cables, transient currents flow across the signal cables. These transient currents can corrupt the signals.

Proper equipotential bonding is thus essential.

- The equipotential bonding conductor must have a sufficiently large cross section (at least 10 mm^2).
- The distance between the signal cable and the associated equipotential bonding conductor must be as small as possible (antenna effect).
- A fine-strand conductor must be used (better high-frequency conductivity).
- When connecting the equipotential bonding conductors to the centralized equipotential bonding strip (EBS), the power components and non-power components must be combined.
- The equipotential bonding conductors of the separate modules must lead directly to the equipotential bonding strip.

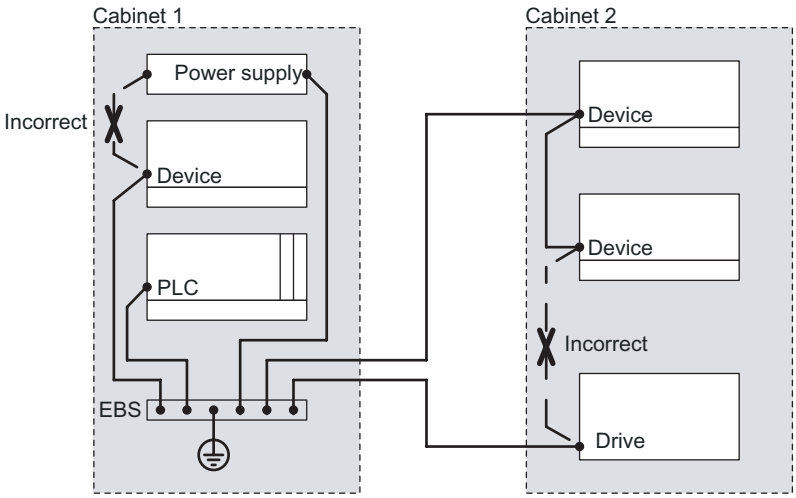

Figure 4-11 Equipotential bonding (EBS = Equipotential bonding strip)

The better the equipotential bonding in a plant, the smaller the chance of interference due to fluctuations in potential.

Equipotential bonding should not be confused with protective earthing of a plant. Protective earthing prevents the occurrence of excessive shock voltages in the event of equipment faults whereas equipotential bonding prevents the occurrence of differences in potential.

4.7.7 Cable shielding

Signal cables must be shielded in order to prevent coupling of interference.

The best shielding is achieved by installing the cables in steel tubes. However, this is only necessary if the signal cable is routed through an environment prone to particular interference. It is usually adequate to use cables with braided shields. In either case, however, correct connection is vital for effective shielding.

Note

An unconnected or incorrectly connected shield has no shielding effect.

As a rule:

- For analog signal cables, the shield should be connected at one end on the receiver side
- For digital signals, the shield should be connected to the enclosure at both ends
- Since interference signals are frequently within the HF range (> 10 kHz), a large-area HF-proof shield contact is necessary

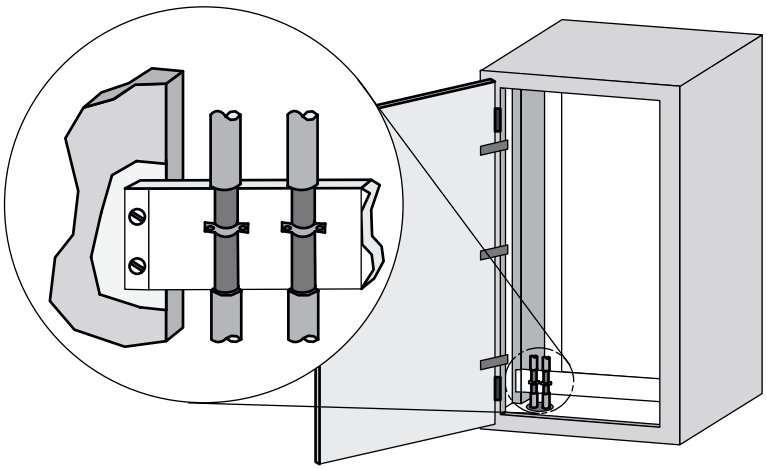

Figure 4-12 Cable shielding

The shielding bus should be connected to the control cabinet enclosure in a manner allowing good conductance (large-area contact) and must be situated as close as possible to the cable inlet. The cable insulation must be removed and the cable clamped to the shielding bus (high-frequency clamp) or secured using cable ties. Care should be taken to ensure that the connection allows good conductance.

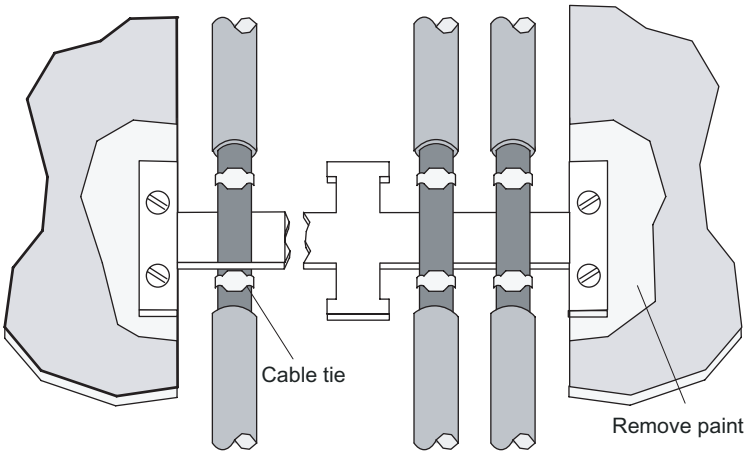

Figure 4-13 Connection of shielding bus

The shielding bus must be connected to the PE busbar.

If shielded cables have to be interrupted, the shield must be continued via the corresponding connector housing. Only suitable connectors may be used for this purpose.

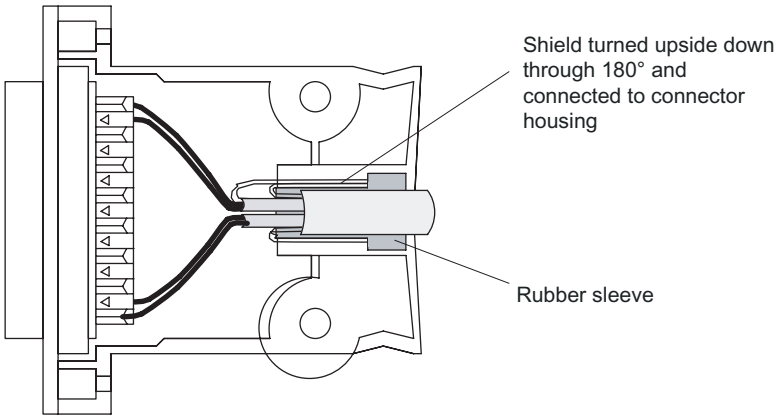

Figure 4-14 Interruption of shielded cables

If intermediate connectors, which do not have a suitable shield connection, are used, the shield must be continued by fixing cable clamps at the point of interruption. This ensures a large-area, HF-conducting contact.

Readers

5

The following table shows the most important features of the stationary RF600 readers at a glance:

Features		SIMATIC RF660R	SIMATIC RF630R	SIMATIC RF620R
Air interface / standards supported		EPCglobal Class 1, Gen 1, EPCglobal Class 1, Gen 2, ISO 18000-6B	EPCglobal Class 1, Gen 2	EPCglobal Class 1, Gen 2
ETSI variant		Available	Available	Available
FCC variant		Available	Available	Available
LEDs		3	1	1
Interfaces				
	Number of external antennas via RTNC	2 through 4	1 through 2	- Integrated antenna
	Ethernet	1x RJ45 connection according to IEEE 802.3 and ISO 8802-3	-	-
	RS232	1x connector (5-pin M12). Bit rate: 115200 bps	-	-
	RS422	-	1 x plug (8-pin M12)	1 x plug (8-pin M12)
	Digital inputs	3 (8-pin M12) log. "0": 0…7 V log. "1": 15 to 24 V	-	-
	Digital outputs (short-circuit proof)	3 (8-pin M12) 24 V; 0.5 A each	-	-
	Power supply	24 V DC (4-pin M12) 20 to 30 V (2.2 A) external	Via ASM	Via ASM
Max. radiated power EU, EFTA, Turkey in ERP		-	-	0.795 W ERP
Max. radiated power USA/China in EIRP		-	-	0.5 W EIRP
Max. transmit power EU, EFTA, Turkey / China		0.1 to 2 W	0.5 W	-
Max. transmit power USA		0.24 to 2.4 W	0.5 W	-
Max. transmission rate of the communication interface		921 kbps (max. TCP/IP data rate)	115.2 kbps	115.2 kbps
Max. data rate reader-to-tag		80 kbps	40 kbps	40 kbps
Max. data rate tag-to-reader		160 kbps	160 kbps	160 kbps

5.1 RF660R reader

5.1.1 Description

SIMATIC RF660R is a stationary reader for connecting up to 4 external antennas. A rugged housing with high IP65 degree of protection means that the device is a universal and reliable partner in harsh environments such as production plants, conveyor systems, warehouses, or direct at the loading gate.

Figure 5-1 RF660R reader

Highlights

- The tags are read in accordance with the requirements of the EPCglobal Class 1, Gen 1 and Gen 2, and ISO/IEC 18000-6B standards
- Supports low-cost SmartLabels as well as reusable, rugged data media
- High reading speed: many tags can be read simultaneously (mass recording), rapidly moving tags are reliably recorded
- Suitable for the 865 to 868 MHz UHF bands in Europe and the 920.125 to 924.875 MHz band in China as well as the 902 to 928 MHz UHF band in North America
- Up to 4 antennas can be connected and configured in operating mode
- Reader degree of protection IP65, antenna degree of protection IP67
- Can be used for a high temperature range
- Antenna switching for high tag reader probability
- Dense Interrogator Environment mode, (DIE mode) for environments in which many readers are operated in close proximity to each other
- Flexible system integration:
  - Serial (RS 232)
  - Ethernet (TCP/IP)

5.1.1.1 Ordering data

Device	Order No.
RF660R reader basic unit for ETSI and FCC	6GT2811-0AA00

Accessories	Description	Order No.
Antennas	For ETSI (868 MHz)	6GT2812-0AA00
	For FCC (915 MHz)	6GT2812-0AA01
Antenna cable	3 m (cable attenuation: 1.0 dB)	6GT2815-0BH30
	10 m (cable attenuation: 4.0dB)	6GT2815-0BN10
	20 m (cable attenuation: 4.0dB)	6GT2815-0BN20
Connecting cable	RS 232, 9-pin sub D female connector: 5 m	6GT2891-0GH50
	RS 232, 9-pin sub D female connector: 10 m	6GT2891-0GN10
	Digital I/O, M12 socket: 2m	6GT2891-0FH20
	Digital I/O, M12 socket: 5m	6GT2891-0FH50
	Digital I/O, M12 socket: 10m	6GT2891-0FN10
	Digital I/O, M12 socket: 20m	6GT2891-0FN20
	Digital I/O, M12 socket: 50m	6GT2891-0FN50
	Digital I/O, open cable ends, 5m	3RX8000-0CD81-1GF0
	Ethernet: 10 m (only for RF660R)	6GT2891-0HN10
	Ethernet: 20m (only for RF660R)	6GT2891-0HN20
Wide-range power supply unit for SIMATIC RF systems	With EU plug	6GT2898-0AA00
	With UK plug	6GT2898-0AA10
	With US plug	6GT2898-0AA20
24 V connecting cable	5 m between reader and power pack	6GT2491-1HH50
Software and documentation	CD-ROM	6GT2080-2AA10

NOTICE

Loss of validity for type tests and certificates

Note that when the 3 m antenna cable is used, the certifications for operating the reader outside of the validity range of ETSI (EU, EFTA, Turkey) become void.

NOTICE

Excessive radiated power

Note that when the 3 m antenna cable is used, the antenna attenuation for the RF660R must be set at 1.0 dB. Otherwise, the result would be a radiated power that exceeds the permitted range.

5.1.1.2 Design of the RF660R reader

Item	Description
(1)	Status LED
(2)	Industrial Ethernet (RJ45 socket)
(3)	RS 422 interface (not assigned)
(4)	RS 232 interface (5-pin M12 connector)
(5)	Digital I/O (8-pin M12 connector)
(6)	Power, 24 V DC; (4-pin M12 connector)

Description
4 antenna connections ANT 1 to ANT 4 (RTNC plug)

5.1.1.3 Status displays

Status displays	LEDs	Color	Description
	Power on	Green	Power supply ON
	Tag Detect	Yellow	LED lit, as soon as at least one tag with a correct tag ID is within the field.
	System Error	Red	Reader is not active, a more or less major fault has occurred In addition, this LED also indicates the fault status through the number of flashing pulses. Reboot (operating voltage Off → On is necessary). The LED flashes once for the 'INACTIVE' status, rebooting is **not** necessary in this case.

Note

If "Tag Detect" is not lit even though a tag is located within the field, common reasons include:

- Tag protocol has been set incorrectly (can be set with Configuration Software)
- Tag is defective
- Reader or antenna has a defect
- Tag is not in the field of radiation of the transmit antenna

5.1.1.4 Pin assignment of the serial interfaces

RS 232 connector	Pin	Pin assignment
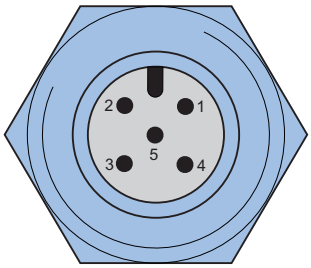	1 2 3 4 5	RS232_TX N.C. N.C. RS232_RX GND

Industrial Ethernet	Pin	Pin assignment
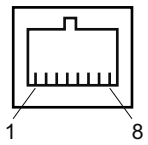	1 2 3 4 5 6 7 8	Transmit Data (+) Transmit Data (-) Receive Data (+) Terminated Terminated Receive Data (-) Terminated Terminated

NOTICE
We recommend that only original Siemens Ethernet connectors are used (10 m cable: Order No. 6GT2891-0HN10; 20 m cable: Order No. 6GT2891-0HN20) for connecting to the Ethernet socket of the reader. If plug-in connectors from other manufacturers are used, it may be difficult or even impossible to remove the plug from the reader

5.1.1.5 Pin assignment and connections of the digital I/O interface

Pin assignment

Digital I/O socket	Pin	Pin assignment
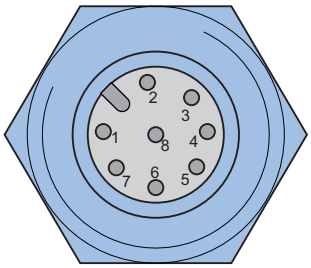	1	Input USER_IN (0)
	2	Input USER_IN (1)
	3	Input USER_IN (2)
	4	GND (IN)
	5	Output USER_OUT (0)
	6	Output USER_OUT (1)
	7	Output USER_OUT (2)
	8	Housing

Connections

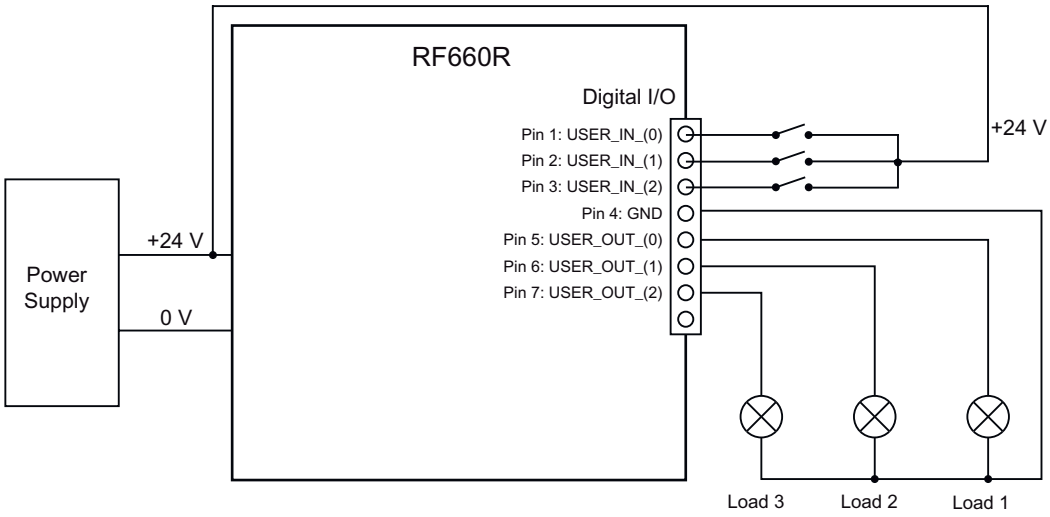

Figure 5-2 Connections for digital I/O

Output USER_OUT (0), (1), (2)

- These are high-side switches that connect V_{cc} (+24 V) to the output ('active high').
- Each output is rated for 0.5 A current and is electronically protected.
- The 0 V rail is Pin 4 (GND).
- Three digital outputs can be operated simultaneously with up to 0.5 A each.
- The outputs are optically isolated through optocouplers.

Input USER_IN (0), (1), (2)

- The inputs are optically isolated through optocouplers.
- The 24 V voltage for the digital inputs (e.g. switches, proximity switches) must be supplied over a separate cable.
- The 24 V voltage for the digital inputs can alternatively be supplied from a digital output (USER-OUT). In the user program, however, the digital output must be permanently connected to "1" in this case.

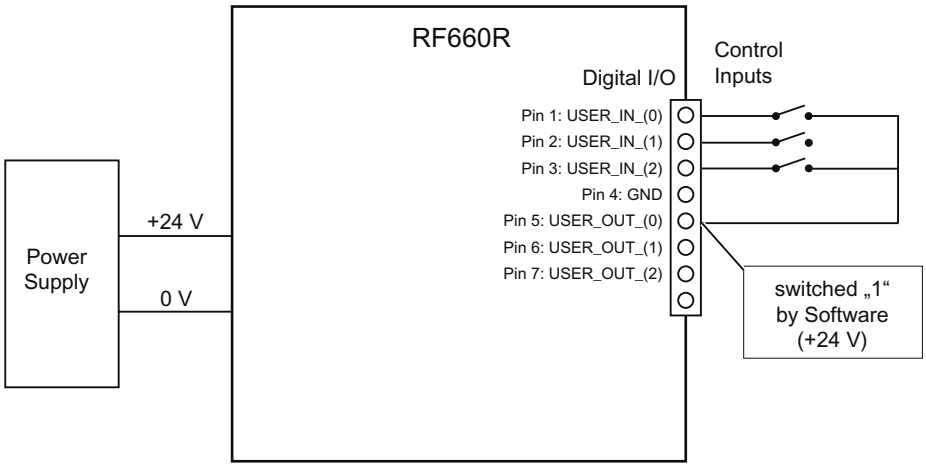

Figure 5-3 RF660R connection diagram

NOTICE
It may be necessary to restart the reader
The length of trigger pulses must be longer than 30 ms.

5.1.1.6 Pin assignment of the connecting cable

Table 5- 1 RS 232

Signal	M12Pin	SUB-D pin	Image
TX (reader)	1	2	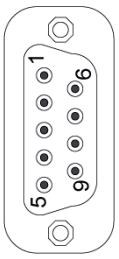
-	2	-	
-	3	-	
RX (reader)	4	3	
GND	5	5	

Table 5- 2 Digital I/O, for cable with open cable ends

M12 pin	Core color	Pin assignment	View of M12 connector
1	white	Input USER_IN (0)	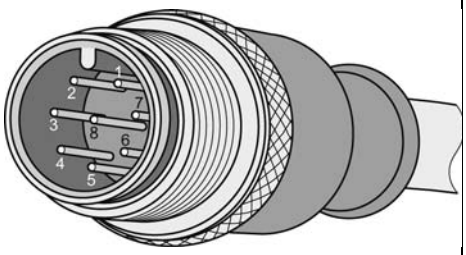
2	brown	Input USER_IN (1)	
3	green	Input USER_IN (2)	
4	yellow	GND	
5	Gray	Output USER_OUT (0)	
6	pink	Output USER_OUT (1)	
7	blue	Output USER_OUT (2)	
8	red	Housing	
Shield	Shield		

Remark

This cable has an 8-pin M12 connector at one end and the other cable end is 'open'. There are 8 color-coded single cores there for connecting to external devices. Cable length = 5m. The cable length can be reduced, if needed.

5.1.1.7 Power supply

Pin assignment of the power connections

Power connector	Pin	Pin assignment
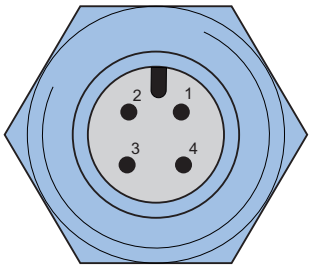	1 2 3 4	Ground (0 V) +24 V +24 V Ground (0 V)

5.1.1.8 Grounding connection

A low-impedance earth connection ensures that interference signals generated, for example, by external power supply cables or signal cables are safely discharged to earth.

Earthing connection	
	The ground terminal (M4 threads) on the device (large surface, large-area contact) has to be connected with the ground conductor of the plant or the cabinet in which the reader is to be installed. The minimum conductor cross-section may not be less than 2.5 mm^2.

5.1.2 Planning application

Firmware and software compatibility

CAUTION
Damage to the reader The SIMATIC RF660R reader with a firmware version V1.1 must only be configured and operated with the relevant SIMATIC RF660R Configuration Software V1.1. The SIMATIC RF660R reader with a firmware version V1.2 must only be configured and operated with the relevant SIMATIC RF660R Configuration Software V1.1 (limited functionality) or V1.2. No other combination of firmware and configuration software is permissible. The Configuration Software V1.2 recognizes if it has been connected to a SIMATIC RF660R reader with firmware version V1.2 or version 1.1. Please therefore refer to Section "Backward compatibility" of the Configuration Manual before you make any changes to the firmware version of the SIMATIC RF660R Configuration Software.

NOTICE
Firmware version V1.2 and RF-MANAGER 2008 The SIMATIC RF-MANAGER 2008 can be operated with the SIMATIC RF660R reader with firmware version V1.2. However, in the compatibility mode it only supports the functions of firmware version V1.1. In future firmware updates of the RF-MANAGER 2008 these limitations should no longer be present. Please visit the Internet addresses listed in Chapter Service & Support (Page 320) regarding the availability of updates.

5.1.2.1 Increasing the probability of identification for tags - Antenna switching

To achieve a high probability of reading tags, the antenna switching function has been implemented in the RF660R reader:

During a defined time period, the reader transmits on one antenna and receives on the other. As long as the antenna is receiving signals from further tags, the reader continues to transmit on the same transmitter antenna until all responding tags have been identified. Subsequently, or if no tags respond, the reader activates another antenna as the transmitter antenna. After all the antenna have transmitted at least once and no tag has responded, or when the settling time is excessively long, the reader activates frequency hopping (in the USA) or channel selection (in Europe).

Cycle 1

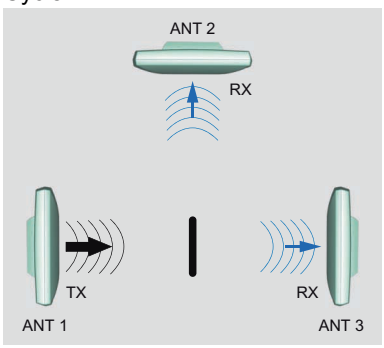

Antenna 1 transmits
Antennas 2 and 3 receive

Cycle 2

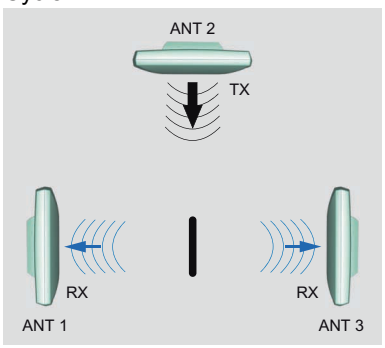

Antenna 2 transmits
Antennas 1 and 3 receive

Cycle 3

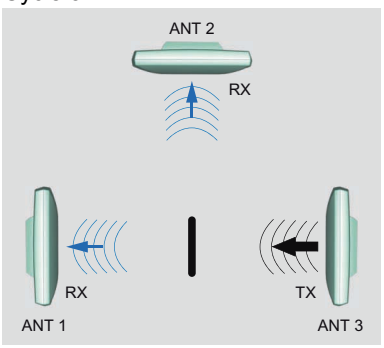

Antenna 3 transmits
Antennas 1 and 2 receive

5.1.3 Installation /Mounting

Requirement

⚠ WARNING

Ensure that the wall or ceiling can hold four times the total weight of the device.

⚠ CAUTION

Emitted radiation

The transmitter complies with the requirements of Health Canada and the FCC limit values for subjecting persons to HF radiation, provided that a minimum spacing of 26 cm exists between antenna and person. When the antennas are installed, you must therefore ensure that a minimum spacing of 26 cm is maintained between personnel and antennas.

Mounting/installing the device

The positions of the fixing holes for the device are shown in the section Dimension drawings (Page 97).

Examples of mounting types		
Material	**Hole diameter**	**Mounting**
Concrete	8 mm diameter 60 mm depth	Rawlplug: 8 mm diameter, 50 mm length Screws: 4 mm diameter, 50 mm length
Plasterboard (min. 13 mm thick)	14 mm diameter	Gravity toggle: 4 mm diameter, 50 mm length
Metal (min. 2 mm thick)	5 mm diameter	M4 metal screws: 4 mm diameter, 15 mm length

5.1.3.1 Configuration/integration

Configuration

Two communication interfaces are available for integrating the device into system environments/networks:

- Ethernet and
- RS 232

The communication interfaces transfer the data to IT, ERP and SCM systems on SIMATIC PLCs or PCs (also used for configuration and diagnostics).

Simple process controls (e.g. a traffic signal) can be directly implemented using the write/read device via three digital inputs and outputs with 24 V each.

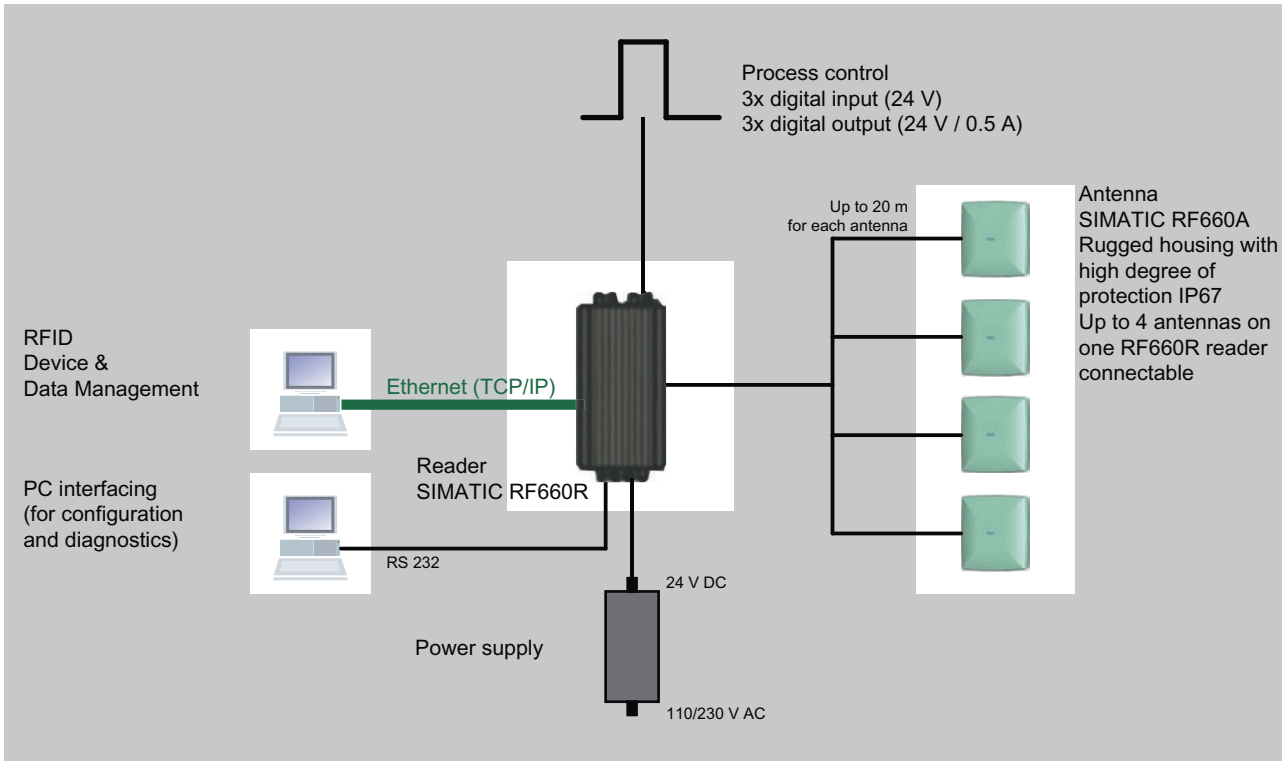

Figure 5-4 Configuration overview of the RF660R reader

Note

Maximum cable length for the RS232 interface

For secure and error-free data transmission, a data transfer rate of 115.2 kbit/s applies: maximum cable length 10 m.

Transmission protocols

RS232 communication

	XML protocol
Transmission rates	115200 bps
Start bits	1
Data bits	8
Parity	None
Flow control	Xon/Xoff
Stop bits	1

Ethernet communication

The Ethernet interface offers automatic selection between 10BaseT and 100BaseTX.

Shielded Twisted-Pair patch cables with standard RJ45 connectors are recommended for a reliable connection.

5.1.4 Technical specifications

5.1.4.1 Mechanical data

Mechanical specification of RF660R		
Weight	3.7 kg	
Dimensions (L x W x H) in mm	320 x 145 x 100 without connections	
Material	Aluminum	
Color	Anthracite	
MTBF (Mean Time Before Failure)	27,2 years	
Power consumption, typical	24 V • At 2 W transmit power • No digital outputs active	800 mA

Mechanical environmental conditions	
Shock	ETSI EN 300 019-2-3 V2.1.2 IEC 60068-2-27
Total shock response spectrum	Type 3.3
Vibration	ETSI EN 300 019-2-3 V2.1.2 IEC 60068-2-64
Climatic Conditions	
Ambient temperature during operation	-25 °C to +55 °C
Ambient temperature for transport and storage	-40 °C to +85 °C
Electromagnetic compatibility	ETSI EN 301 489-1 / -3
	ETSI EN 302 208
	ETSI EN 300220 (ETSI SRD)
	FCC Part 15

Status displays on the device	
Power On	Green LED
Tag Detect	Yellow LED
System error	Red LED
Interfaces	
Antenna connections	4x RTNC connector
Maximum number of antenna channels operating independently of each other	2 (with 2 x 2 antennas, tags can be read by a reader at 2 independent locations)
Ethernet 10BaseT or 100BaseTx	1x RJ45 connection according to IEEE 802.3 and ISO 8802-3
RS422	Currently unassigned
RS232	1x connector (5-pin M12). Bit rate: 115200 bps
Digital inputs	3 (8-pin M12) log. "0": 0…7 V log. "1": 15…24 V
Digital outputs (short-circuit proof)	3 (8-pin M12) 24 V; 0.5 A each
Power supply	24 V DC (4-pin M12) 20 to 30 V (2.2 A)

Approvals	• Radio to R&TTE- guidelines EN 300 330, EN 301 489 • CE, EMC, FCC, cULus • IEC60950, including US and Canadian variants of it • FCC CFR47 Part 15.247 • ETSI EN 302-208 (2004) • Reader degree of protection acc. to EN 60529 (IP65) • Antenna degree of protection acc. to EN 60529 (IP67) • Industrial Canada, RSS-210, Issue 6, Sept. 2005

5.1.4.2 Technical data according to EPC and ISO

Frequencies	
European frequency band	865 to 868 MHz (10 subchannels LBT at 2 W ERP, 12 subchannels at 0.5 W ERP, 15 subchannels LBT at 0.1 W ERP)
North American frequency band	902 ... 928 MHz (50 channels, frequency hopping)
Frequency band for China	920.125 to 924.875 MHz (16 subchannels at 2 W ERP, 20 subchannels at 0.1 W ERP)
Frequency accuracy	max.± 10 ppm
Channel spacing	EU: 200 kHz US: 500 kHz China: 250 kHz
Modulation methods	ASK: DSB modulation & PR-ASK modulation Encoding, Manchester or Pulse Interval (PIE)

Effective radiant power	**Europe / China**	**USA**
Range	0.1 to 2 W ERP	0.4 to 4 W EIRP = 0.24 to 2.4 W ERP
Reading distance	**Europe / China**	**USA**
Antennas mounted on opposing sides (portal configuration)	max. 10 m (recommended maximum value for configuration)	max. 10 m (recommended maximum value for configuration)
Antennas mounted on the same side	max. 10 m (recommended maximum value for configuration)	max. 10 m (recommended maximum value for configuration)

5.1.5 Dimension drawings

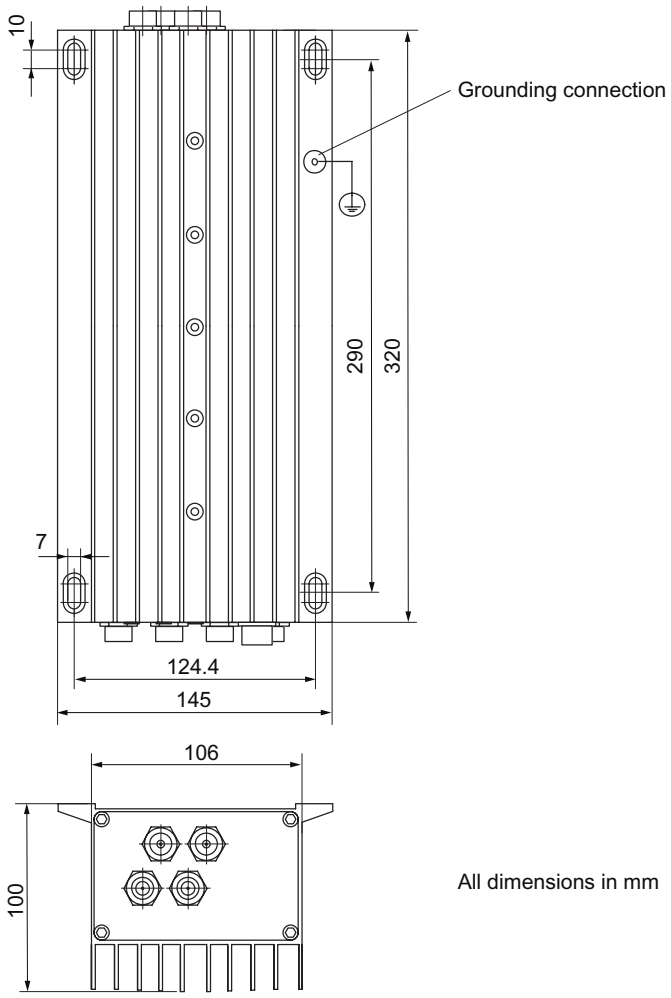

Figure 5-5 Dimension drawing of the reader

5.1.6 Certificates and approvals

5.1.6.1 CE mark

Table 5- 3 6GT2811-0AA00

Certificate	Designation
CE	CE approval according to R&TTE guideline

Table 5- 4 FCC IDs: NXW-RF660; IC 267X-RF660

Standards	
FC Federal Communications Commission	FCC Title 47, Part 15.sections 15.247 Radio Frequency Interference Statement This equipment has been tested and found to comply with the limits for a Class A digital device, pursuant to Part 15 of the FCC Rules.
Industry Canada Radio Standards Specifications	RSS-210 Issue 6, Sections 2.2, A8
C UL US	This product is UL-certified for the USA and Canada. It meets the following safety standard(s): UL 60950-1 - Information Technology Equipment Safety - Part 1: General Requirements CSA C22.2 No. 60950 -1 - Safety of Information Technology Equipment UL Report E 205089

5.1.6.2 FCC information

Siemens SIMATIC RF660R

FCC ID: NXW-RF660

This device complies with Part 15 of the FCC Rules.
Operation is subject to the following two conditions:

(1) This device may not cause harmful interference, and

(2) This device must accept any interference received, including interference that may cause undesired operation.

Caution

Any changes or modifications not expressly approved by the party responsible for compliance could void the user's authority to operate the equipment.

Note

This equipment has been tested and found to comply with the limits for a Class A digital device, pursuant to Part 15 of the FCC Rules. These limits are designed to provide reasonable protection against harmful interference when the equipment is operated in a commercial environment. This equipment generates, uses, and can radiate radio frequency energy and, if not installed and used in accordance with the instruction manual, may cause harmful interference to radio communications. Operation of this equipment in a residential area is likely to cause harmful interference in which case the user will be required to correct the interference at his own expense.

5.2 RF620R reader

5.2.1 Description

The SIMATIC RF620R is an active stationary reader in the UHF frequency range with an integrated circular polarized antenna.

The SIMATIC RF620R is connected to a SIMATIC S7 controller via an ASM interface module. The degree of protection corresponds to IP 65.

	Item	Designation
	(1)	LED status indicator
	(2)	RS 422 interface (8-pin M12 socket)

Highlights

- The tags are read in accordance with the requirements of the EPCglobal Class 1, Gen 2 and ISO/IEC 18000-6C standards
- Supports low-cost SmartLabels as well as reusable, rugged data media
- High reading speed: Depending on the function block (multitag mode), many tags can be detected simultaneously (bulk reading), rapidly moving tags are reliably acquired.
- The RF620R (ETSI) "6GT2811-5BA00-0AA0" is suitable for the frequency band 865 to 868 MHz UHF (EU, EFTA, Turkey). The reader supports the ETSI EN 302 208 V1.1.2 standard as well as the new ETSI EN 302 208 V1.2.1 standard (4-channel plan).
- The RF620R (FCC) "6GT2811-5BA00-1AA0" is suitable for the frequency ranges 920.25 to 924.75 MHz (Thailand) and 902 to 928 MHz (North America).
- IP65 degree of protection for reader
- Can be used for a high temperature range
- Dense Reader Mode (DRM) for environments in which many readers are operated in close proximity to each other
- TIA system interface:
  - RS 422

5.2.1.1 Ordering data

Device	Order No.
RF620R (ETSI) reader basic unit for EU, EFTA, Turkey	6GT2811-5BA00-0AA0
RF620R (FCC) reader basic unit	6GT2811-5BA00-1AA0

Accessories	Designation	Order No.
Connecting cable	RS 422, M12 plug, 8-pin socket: 2 m	6GT2891-0FH20
	RS 422, M12 plug, 8-pin socket: 5 m	6GT2891-0FH50
	RS 422, M12 plug, 8-pin socket: 10 m	6GT2891-0FN10
	RS 422, M12 plug, 8-pin socket: 20 m	6GT2891-0FN20
	RS 422, M12 plug, 8-pin socket: 50 m	6GT2891-0FN50
Antenna mounting kit	Standard	6GT2890-0AA00
Software & Documentation	CD-ROM	6GT2080-2AA10

5.2.1.2 Status display

The device is equipped with a three colored LED. The LED can be lit in green, red or yellow. The meaning of the indication changes in accordance with the color and state (on, off, flashing) of the LED:

Green LED	Red LED	Yellow LED	Meaning
Off	Off	Off	The device is starting up.
Flashing	Off	Off	The device is ready. The antenna is switched off.
On	Off	Off	The device is ready. The antenna is switched on.
Off	Off	On	"With presence": At least one tag is in the field. "Without presence": Communication with a tag is active.
Off	Flashing	Off	Reader is not active, a serious error has occurred. In addition, this LED also indicates the fault status through the number of flashing pulses. Reboot (operating voltage Off → On is necessary). The LED flashes once for the 'INACTIVE' status, rebooting is **not** necessary in this case.

For more detailed information on the flash codes of the reader see Chapter Error messages and flash codes for RF620R/RF630R (Page 300)

Note

LED not lit yellow?

If the LED does not light up yellow even though a tag is located within the field, common causes are:

- Incorrect configuration in the init_run command, or init_run command was not executed (see "Configuration Manual RF620R/RF630R")
- Antenna is switched off
- A tag is used, that is not compatible with the reader protocol (EPC Global Class 1 Gen 2).
- Tag is defective
- Reader or antenna has a defect
- Tag is not in the field of radiation of the transmit antenna

5.2.1.3 Pin assignment of the RS422 interface

Pin	Pin Device end 8-pin M12	Assignment
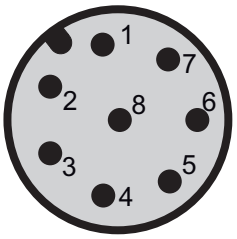	1	+ 24 V
	2	- Transmit
	3	0 V
	4	+ Transmit
	5	+ Receive
	6	- Receive
	7	Free
	8	Earth (shield)

The knurled bolt of the M12 plug is not connected to the shield (on the reader side).

Note

You must therefore not use any SIMATIC connecting cables that use the angled M12 plug.

5.2.1.4 Pin assignment of the connecting cable

Table 5- 5 RS 422 - on reader side

M12 pin	Core color	Pin assignment	View of M12 connector
1	white	24 V DC	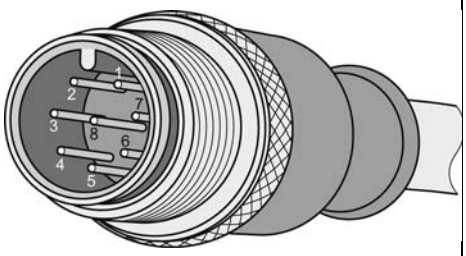
2	brown	TX neg	
3	green	GND	
4	yellow	TX pos	
5	Gray	RX pos	
6	pink	RX neg	
7	blue	Not used	
8	red	Earth (shield)	

Note

This cable has an 8-pin M12 connector at one end and the other cable end is 'open'. There are 8 color-coded single cores there for connecting to external devices. There are different cable lengths in the product range (3 m to 50 m). Long cables can be reduced if necessary.

Note

For long cables: Adapt supply voltage and data rate accordingly

Note that with long cables in particular, the supply voltage of 24 V DC must always be applied. Note also that the data rate on the serial interface must, if necessary, be reduced. (See "Configuration Manual RF620R/RF630R")

5.2.1.5 Grounding connection

The RF620R/RF630R can be electrically connected to the ground potential through a contact washer. The tightening torque must be increased in this case to ensure that electrical contact is made (2.7 Nm).

Ground connection		
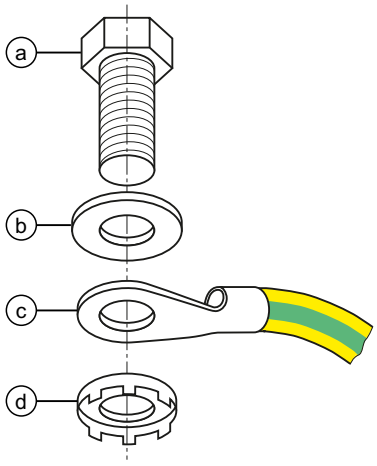	(a)	Hexagon-head screw
	(b)	Plain washer
	(c)	Cable lugs
	(d)	Contact washer: Use contact washers according to the Siemens standard SN 70093-6-FSt-flNnnc-480h for ground connection, Siemens item No.: H70093-A60-Z3

5.2.2 Planning application

5.2.2.1 Minimum mounting clearances of two readers

The RF620R has a circular polarized antenna. At 500 mW ERP radiated power, due to the opening angle of the antennas, their fields can overlap considerably. It is no longer possible to clarify in which antenna field access to the data of a tag is performed.

In order to avoid this, always keep a minimum distance of 3 m between two readers with the maximum radiated power of 500 mW ERP.

Dense Reader Mode (DRM)

The readers can also interfere with each other (secondary fields), if the channels (Reader TX, Transponder TX) overlap. In order to prevent a transponder channel overlapping with a reader channel, we recommend that the Dense Reader Mode (DRM) is used.

5.2.2.2 Antenna diagram for RF620R (ETSI)

The following radiation diagrams show the directional radiation pattern of the internal antenna of the RF620R (ETSI) reader. For the spatial presentation of the directional radiation pattern, the vertical plane in space (Azimuth section) as well as the horizontal plane (elevation section) must be considered. This results in a spatial image of the directional radiation pattern of the antenna with its main and auxiliary fields.

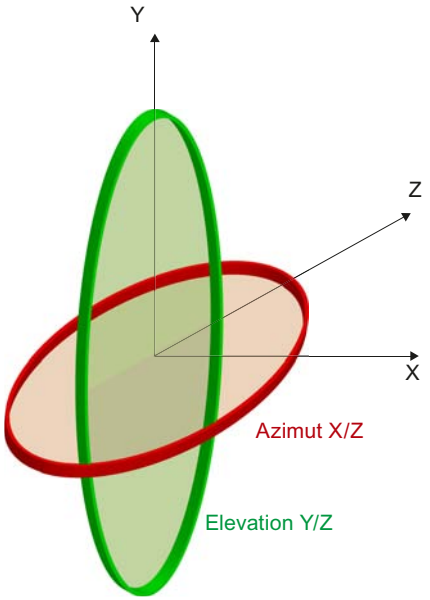

Radiation diagram (Azimuth section)

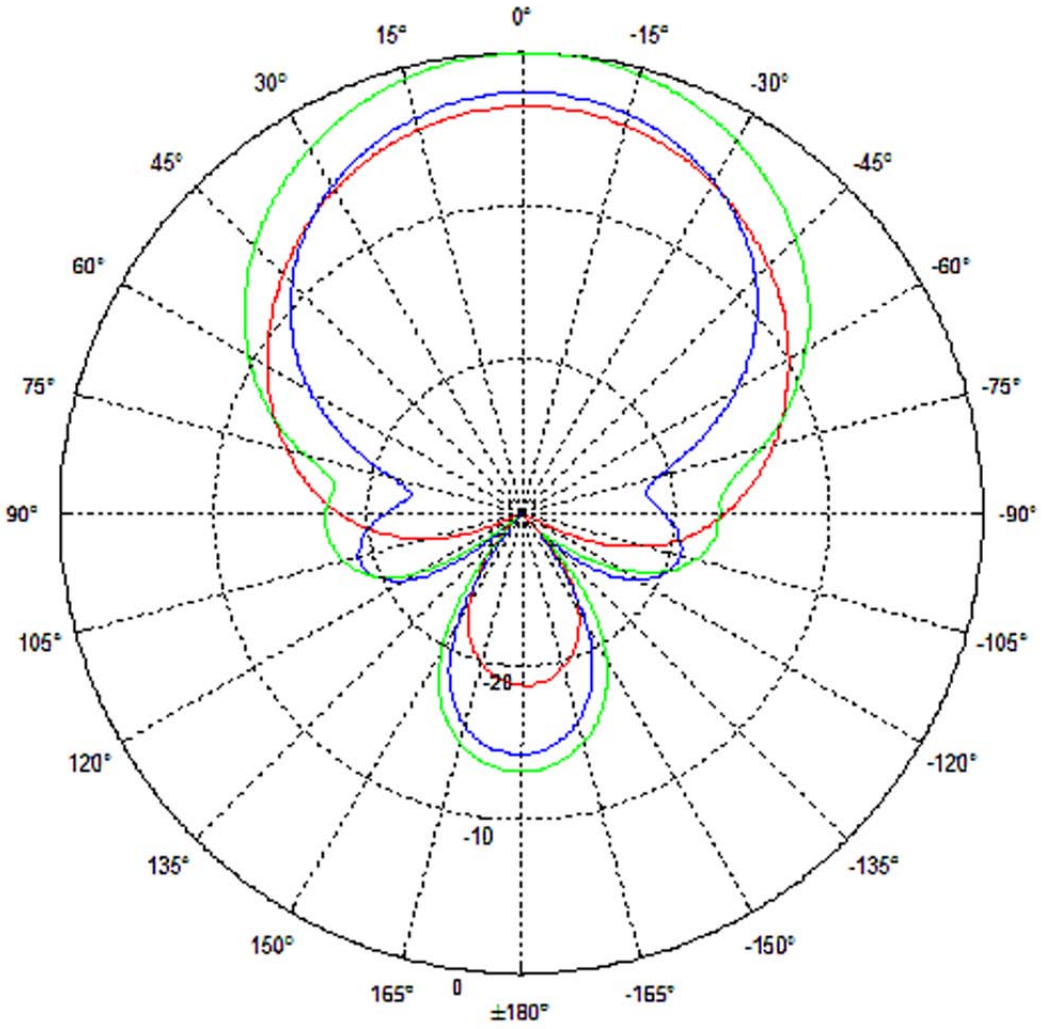

Vertical component of the polarization direction of the antenna

Horizontal component of the polarization direction of the antenna

Right circular component of the polarization direction of the antenna

Figure 5-6 Azimuth section

Radiation diagram (elevation section)

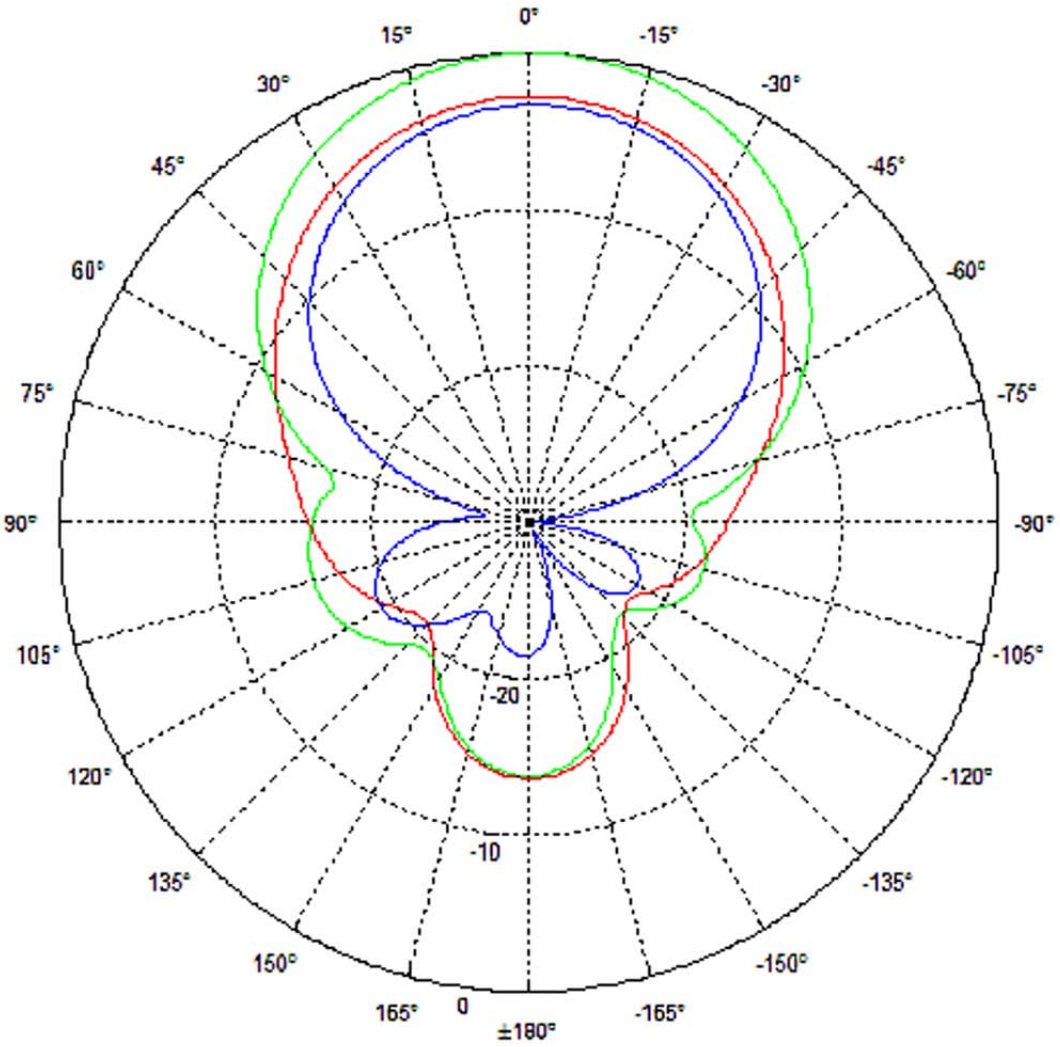

Vertical component of the polarization direction of the antenna

Horizontal component of the polarization direction of the antenna

Right circular component of the polarization direction of the antenna

Figure 5-7 Elevation section

Overview of the antenna parameters

Table 5- 6 Maximum linear electrical opening angle at 865 MHz:

Azimuth section	77.7°
Elevation section	66.1°
Typical antenna gain in the frequency range 865 to 868 MHz	7.3 dBic
Antenna axis ratio	0.7 dB

See also Chapter Guidelines for selecting RFID UHF antennas (Page 147)

5.2.2.3 Antenna diagram for RF620R (FCC)

The following radiation diagrams show the directional radiation pattern of the internal antenna of the RF620R (FCC) reader. For the spatial presentation of the directional radiation pattern, the vertical plane in space (Azimuth section) as well as the horizontal plane (elevation section) must be considered. This results in a spatial image of the directional radiation pattern of the antenna with its main and auxiliary fields.

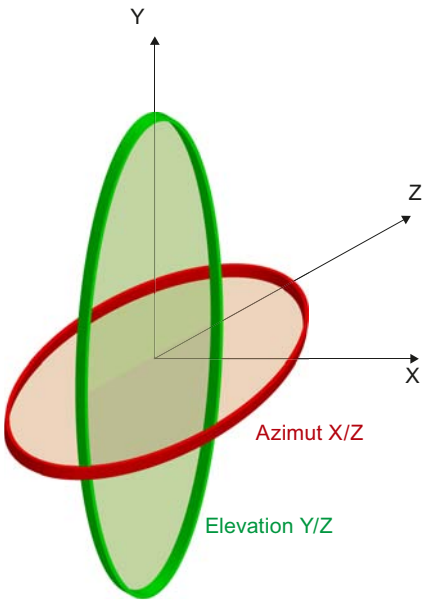

Azimuth XZ plane
Elevation YZ plane

Radiation diagram (Azimuth section)

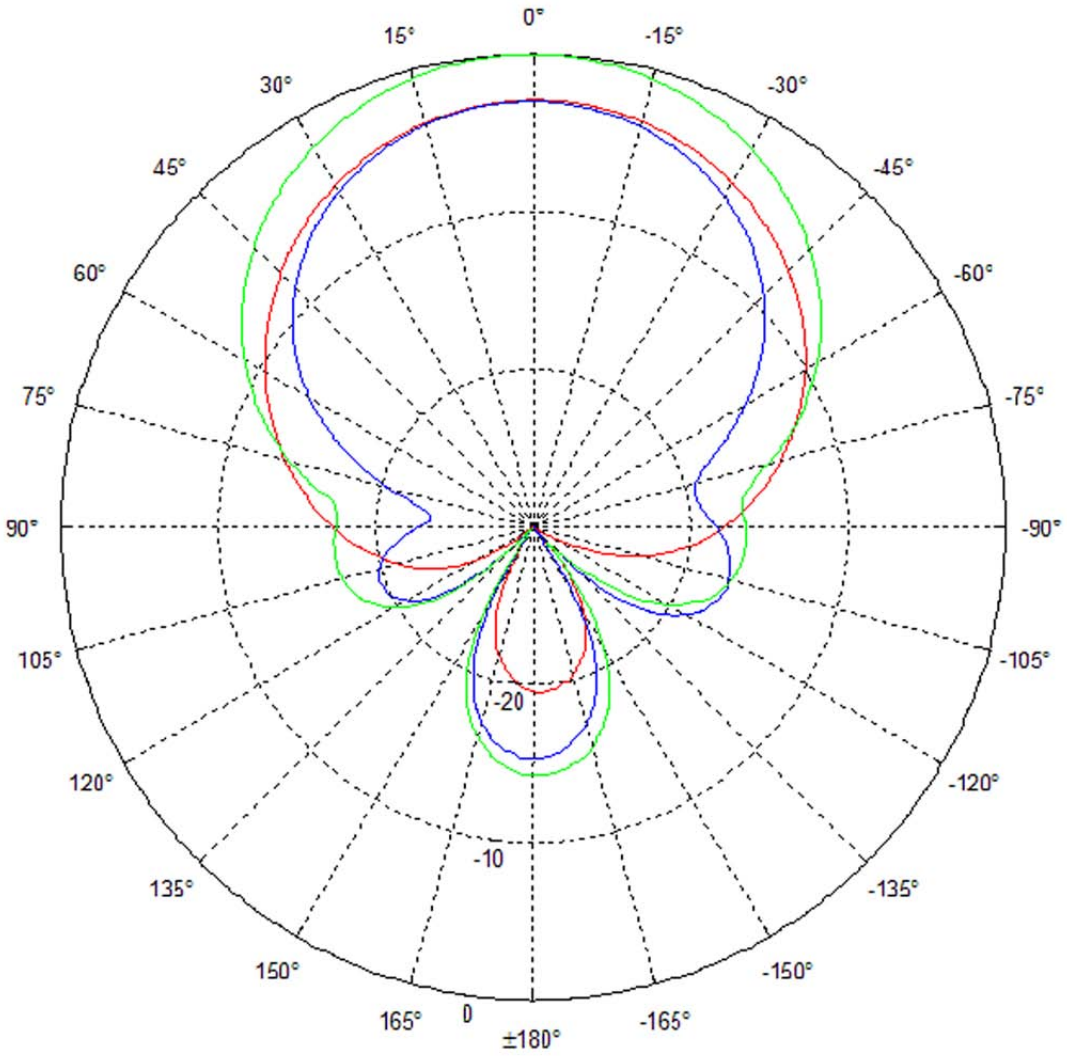

Vertical component of the polarization direction of the antenna

Horizontal component of the polarization direction of the antenna

Right circular component of the polarization direction of the antenna

Figure 5-8 Azimuth section

Radiation diagram (elevation section)

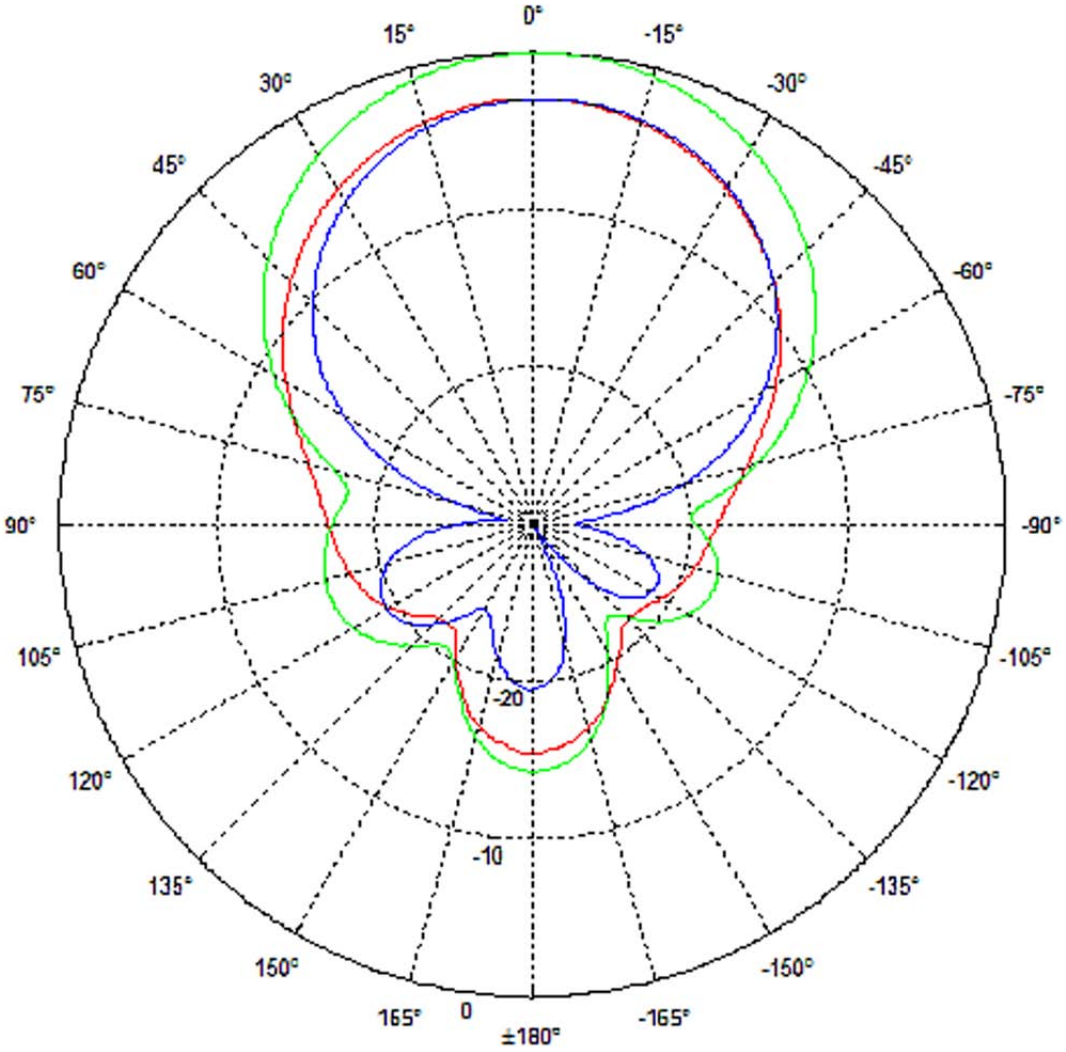

Vertical component of the polarization direction of the antenna

Horizontal component of the polarization direction of the antenna

Right circular component of the polarization direction of the antenna

Figure 5-9 Elevation section

Overview of the antenna parameters

Table 5- 7 Maximum linear electrical opening angle at 865 MHz:

Azimuth section	75.4 °
Elevation section	69.1 °
Typical antenna gain in the frequency range 865 to 868 MHz	7.3 dBic ± 0.5 dB
Antenna axis ratio	<1 dB

See also Chapter Guidelines for selecting RFID UHF antennas (Page 147).

5.2.2.4 Antenna/read point configurations

The RF620R reader has an internal circular polarized antenna. You can cover one read point with this antenna. When several RF620R readers are used, the readers are addressed via the SIMATIC level.

5.2.3 Installing/Mounting

Requirement

⚠ WARNING

Ensure that the wall or ceiling can hold four times the total weight of the device.

NOTICE

Disregarding FCC RF exposure requirements

Ensure that the following conditions are met before the device is mounted to meet the FCC RF exposure requirements:

- The RF620R reader must be installed so that a minimum distance from people of 20 cm is always observed.
- The reader may not be installed or operated in the immediate vicinity of another reader or antenna.

See also chapter FCC information (Page 120) RF620R or chapter FCC information (Page 135) RF630R.

5.2.3.1 Mounting/Installing FCC

⚠ CAUTION

Emitted radiation

The transmitter complies with the requirements of Health Canada and the FCC limit values for subjecting persons to HF radiation, provided that a minimum spacing of 26 cm exists between antenna and person. When the antennas are installed, you must therefore ensure that a minimum spacing of 26 cm is maintained between personnel and antennas.

Mounting/installing the device

You can mount the reader in two different ways:

- Via a standardized VESA 100 mounting system using the Antenna Mounting Kit (see Chapter Mounting with antenna mounting kit (Page 144)). Tighten the M4 screws on the rear of the reader using a maximum torque of ≤ 1.3 Nm.
- Directly onto a flat surface.

The positions of the fixing holes for the device are shown in the section Dimension drawings (Page 118).

5.2.4 Configuration/integration

The RS422 system interface is provided for integrating the device into system environments/networks. The system interface transfers data to SIMATIC controllers or PCs with the appropriate interface.

Apart from transmitting communication data from the reader to the controller and vice versa, the RS422 interface also supplies power to the reader (24 V DC).

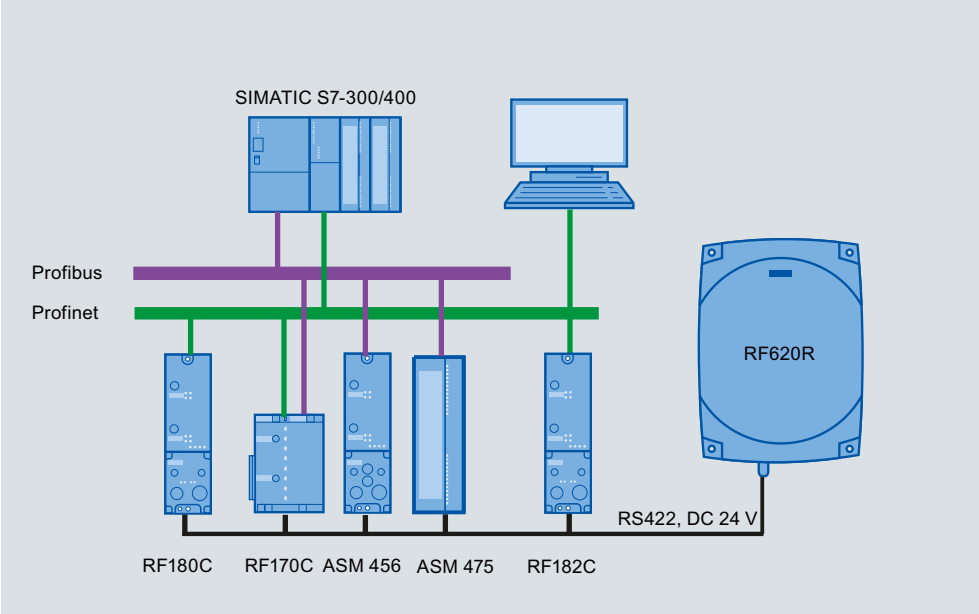

Figure 5-10 Overview of configuration of the RF620R reader

The RF620R reader can alternatively be connected to a SIMATIC controller via the ASM 456, ASM 475, RF170C and RF180C interface modules/communication modules.

The RF620R reader can alternatively also be connected directly to the PC via the RF182 communication module.

For further details on the interface modules used, see Chapter RF660R (Page 279) .

Further information about commissioning the readers can be found in the configuration manual "RF620R/RF630R" in the "Commissioning" section.

5.2.4.1 Transmission protocols

RS 422 communication

	3964R protocol
Transmission rates	19.2 kbps 57.6 kbps 115.2 kbps
Start bits	1
Data bits	8
Parity	Odd
Stop bits	1

5.2.5 Technical data

5.2.5.1 Mechanical data

Mechanical data		
Weight		1850 g
Dimensions (L x W x H) in mm		252 X 193 x 52 mm, without connections
Material for housing top section		ABS (GF 20), silicone-free
Material for housing bottom section		Aluminum, silicone-free
Color of housing top section		Pastel turquoise
Color of housing bottom section		Silver
Status displays on the device		1 LED Colors: Red, yellow, green
Interfaces		
	RS422	1 x plug (8-pin M12)
	Software	SIMATIC S7

Technical and electrical characteristics			
MTBF (Mean Time Between Failures)		16 years	
Supply voltage • Permitted range		21.6 to 30 V DC [1]	
Supply voltage		Current consumption (in standby mode, no transmit power)	Power consumption (in standby mode, no transmit power)
	20 V input voltage on the reader, typical	135 mA	2.7 W
	24 V input voltage on the reader, typical	115 mA	2.76 W
	30 V input voltage on the reader, typical	95 mA	2.85 W
Supply voltage		Current consumption (at 500 mW ERP)	Power requirement (at 500 mW ERP)
	20 V input voltage on the reader, typical	470 mA	9.4 W
	24 V input voltage on the reader, typical	395 mA	9.48 W
	30 V input voltage on the reader, typical	320 mA	9.6 W
Ramp-up time, typical		7 s	

1) All supply and signal voltages must be safety extra low voltage (SELV/PELV according to EN 60950)

24 V DC power supply: safe (electrical) isolation of extra-low voltage (SELV / PELV acc. to EN 60950)

Mechanical environmental conditions	
Shock resistant to EN 60068-2-27 Vibration EN 60068-2-6	50 g[1] 20 g[1]
Climatic Conditions	
Ambient temperature during operation	-25 °C to +55 °C (warm-up time of 10 minutes must be observed)
Ambient temperature for transport and storage	-40 °C to +85 °C

1) The values for shock and vibration are maximum values and must not be applied continuously.

EMC & approvals RF620R (ETSI)	
Electromagnetic compatibility	ETSI EN 301 489-1 / -3
	ETSI EN 302 208
Approvals	• Radio to R&TTE- guidelines EN 300 330, EN 301 489 • CE • ETSI EN 302-208 V1.1.2 • ETSI EN 302-208 V1.2.1 • Reader degree of protection acc. to EN 60529 (IP65)

EMC & approvals for FCC variant	
Electromagnetic compatibility	FCC Part 15
Approvals	• FCC, cULus • IEC60950, including US and Canadian variants of it • FCC CFR47 Part 15.247 • RoHS-compliant according to EU Directive 2002/95/EC • Industrial Canada, RSS-210, Issue 7, June 2007

5.2.5.2 Technical data according to EPC and ISO

Technical data	
Frequency accuracy	max.± 10 ppm
Channel spacing	EU: 200 kHz US: 500 kHz China: 250 kHz
Modulation methods	ASK: DSB modulation & PR-ASK modulation Encoding, Manchester or Pulse Interval (PIE)
Effective Radiant Power (the radiant power depends on the antennas and cables used, see Guidelines for selecting RFID UHF antennas (Page 147))	≤ 0.5 W ERP

ETSI frequencies	
Frequency range EU, EFTA, Turkey according to ETSI EN 302 208 V1.1.2 (commissioning until December 31, 2009)	865 to 868 MHz (10 subchannels LBT at 2 W ERP, 12 subchannels at 0.5 W ERP, 15 subchannels LBT at 0.1 W ERP)
Frequency range EU, EFTA, Turkey according to ETSI EN 302 208 V1.2.1 (valid since November 4, 2008, publication in the Official Journal of the European Union)	• 865.7 MHz • 866.3 MHz • 866.9 MHz • 867.5 MHz (4 channels LBT optional at max. 2 W ERP)

Read distance for EU, EFTA, Turkey / China	
Readers mounted on the same side	Max. 2 m (recommended maximum value for configuration; depending on the transponder)

FCC frequencies	
North American frequency band	902 ... 928 MHz (50 channels, frequency hopping)
Frequency band for China	920.125 to 924.875 MHz (16 subchannels at 2 W ERP, 20 subchannels at 0.1 W ERP)

Read distance for USA	
Readers mounted on the same side	max. 2 m (recommended maximum value for configuration)

5.2.5.3 Maximum number of readable tags

The maximum number of readable tags depends on the following parameters:

- Size of the antenna field
- Readability of the tags

For a transmit power of 500 mW ERP, the following is read when the tag RF620T is used:

- Max. 40 tags in the antenna field (tags perpendicular to antenna and 1 m in front)
- Max. 18tags per second

5.2.6 Dimension drawings

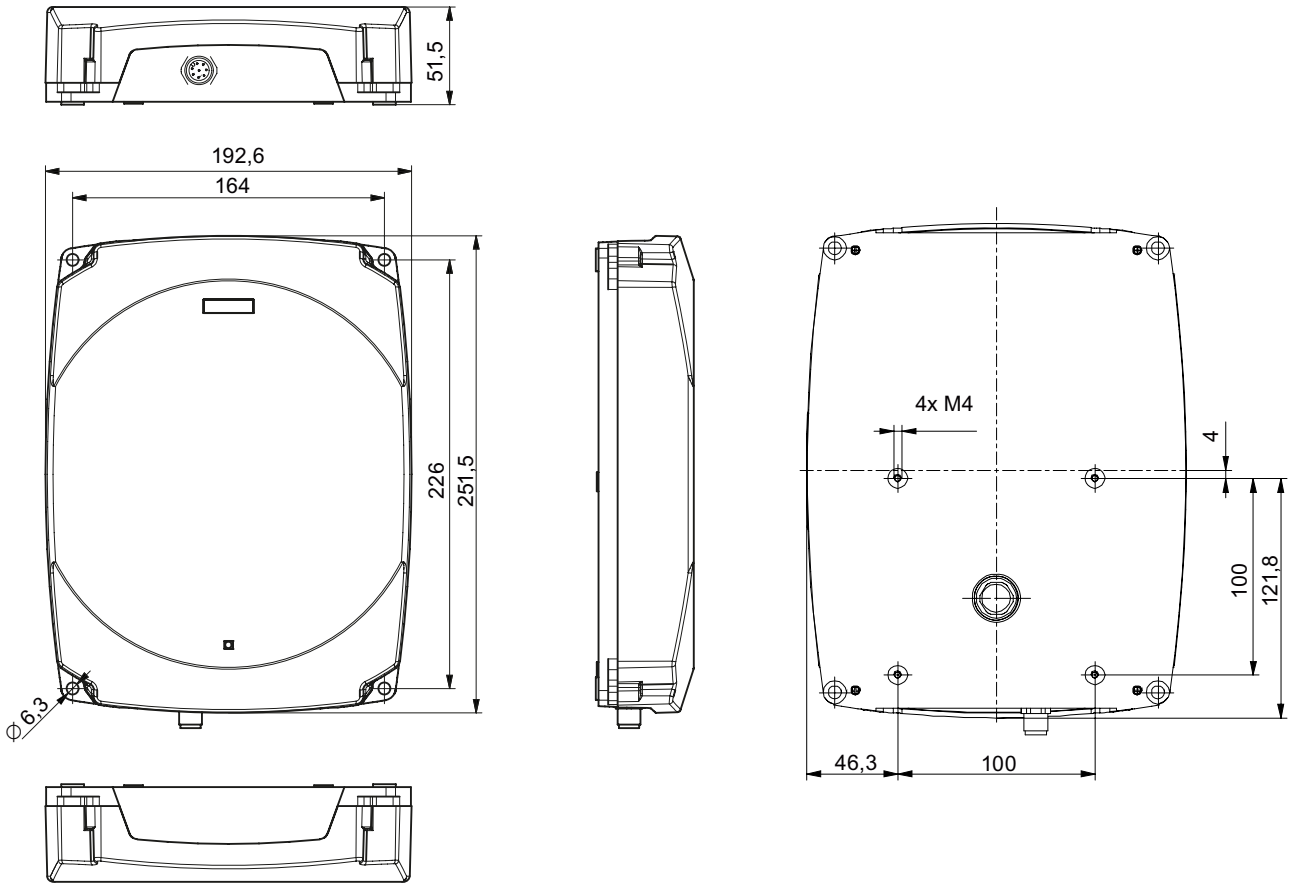

Figure 5-11 Dimension drawing for RF620R

All dimensions in mm

5.2.7 Certificates and approvals

Table 5- 8 6GT2811-5BA00-0AA0

Certificate	Designation
CE	CE approval according to R&TTE guideline

5.2.7.1 Certificates and approvals for RF620R (FCC)

Table 5- 9 6GT2811-5BA00-1AA0

Standard	
Federal Communications Commission	FCC CFR 47, Part 15 sections 15.247 Radio Frequency Interference Statement This equipment has been tested and found to comply with the limits for a Class B digital device, pursuant to Part 15 of the FCC Rules. FCC ID: NXW-RF620R
Industry Canada Radio Standards Specifications	RSS-210 Issue 7, June 2007 ,Sections 2.2, A8 IC: 267X-RF620R
C US	This product is UL-certified for the USA and Canada. It meets the following safety standard(s): UL 60950-1 - Information Technology Equipment Safety - Part 1: General Requirements CSA C22.2 No. 60950 -1 - Safety of Information Technology Equipment UL Report E 205089

5.2.7.2 FCC information

Siemens SIMATIC RF620R (FCC): 6GT2811-5BA00-1AA0

FCC ID: NXW-RF620R

This device complies with Part 15 of the FCC Rules.
Operation is subject to the following two conditions:

(1) This device may not cause harmful interference, and

(2) This device must accept any interference received, including interference that may cause undesired operation.

Caution

Any changes or modifications not expressly approved by the party responsible for compliance could void the user's authority to operate the equipment.

Note

This equipment has been tested and found to comply with the limits for a Class B digital device, pursuant to Part 15 of the FCC Rules. These limits are designed to provide reasonable protection against harmful interference when the equipment is operated in a commercial environment. This equipment generates, uses, and can radiate radio frequency energy and, if not installed and used in accordance with the instruction manual, may cause harmful interference to radio communications. Operation of this equipment in a residential area is likely to cause harmful interference in which case the user will be required to correct the interference at his own expense.

FCC Notice

To comply with FCC part 15 rules in the United States, the system must be professionally installed to ensure compliance with the Part 15 certification.

It is the responsibility of the operator and professional installer to ensure that only certified systems are deployed in the United States. The use of the system in any other combination (such as co-located antennas transmitting the same information) is expressly forbidden.

FCC Exposure Information

To comply with FCC RF exposure compliance requirements, the RF620R Reader (antenna and transmitter) must be installed to provide a separation distance of at least 20 cm from all persons and must not be co-located or operating in conjunction with any other antenna or transmitter.

5.3 RF630R reader

5.3.1 Description

The SIMATIC RF630R is an active stationary reader in the UHF frequency range without an integrated antenna. Up to two external UHF RFID antennas can be connected via TNC reverse connections.

The maximum HF power output is 0.5 W on the reader output. The SIMATIC RF630R is connected to a SIMATIC S7 controller via an ASM interface module. The degree of protection is IP65.

	Item	Designation
	(1)	TNCreverse interface for connection of antenna 1 (ANT 1)
	(2)	TNCreverse interface for connection of antenna 2 (ANT 2)
	(2)	LED status indicator
	(3)	RS 422 interface (8-pin M12 connector)

Highlights

- The tags are read in accordance with the requirements of the EPCglobal Class 1, Gen 2 and ISO/IEC 18000-6C standards
- Supports low-cost SmartLabels as well as reusable, rugged data media
- High reading speed: Depending on the function block (multitag mode), many tags can be detected simultaneously (bulk reading), rapidly moving tags are reliably acquired.
- The RF630R (ETSI) "6GT2811-4AA00-0AA0" is suitable for the frequency band 865 to 868 MHz UHF (EU, EFTA, Turkey). The reader supports the ETSI EN 302 208 V1.1.2 standard as well as the new ETSI EN 302 208 V1.2.1 standard (4-channel plan).
- The RF630R (FCC) "6GT2811-4AA00-1AA0" is suitable for the frequency bands 920.25 to 924.75 MHz (Thailand) and 902 to 928 MHz (North America).
- Up to 2 external antennas can be connected and configured in operating mode
- IP65 degree of protection for reader
- Can be used for a high temperature range
- Dense Reader Mode (DRM) for environments in which many readers are operated in close proximity to each other
- TIA system interface:
  - RS 422

5.3.1.1 Ordering data

Device	Order No.
RF630R (ETSI) reader basic unit for EU, EFTA, Turkey	6GT2811-4AA00-0AA0
RF660A antennas for EU, EFTA, Turkey (868 MHz)	6GT2812-0AA00
RF630R (FCC) reader basic unit for the USA	6GT2811-4AA00-1AA0
Antennas for the USA and China (915 MHz)	6GT2812-0AA01

Accessories	Designation	Order No.
Antenna cable	3 m (cable attenuation: 1.0 dB)	6GT2815-0BH30
	10 m (cable attenuation: 4.0 dB)	6GT2815-0BN10
	20 m (cable attenuation: 4.0 dB)	6GT2815-0BN20
Connecting cable	RS 422, M12 plug, 8-pin socket: 2 m	6GT2891-0FH20
	RS 422, M12 plug, 8-pin socket: 5 m	6GT2891-0FH50
	RS 422, M12 plug, 8-pin socket: 10 m	6GT2891-0FN10
	RS 422, M12 plug, 8-pin socket: 20 m	6GT2891-0FN20
	RS 422, M12 plug, 8-pin socket: 50 m	6GT2891-0FN50
Software & Documentation	RFID CD-ROM	6GT2080-2AA10

5.3.1.2 Status display

The device is equipped with a three colored LED. The LED can be lit in green, red or yellow. The meaning of the indication changes in accordance with the color and state (on, off, flashing) of the LED:

Green LED	Red LED	Yellow LED	Meaning
Off	Off	Off	The device is starting up.
Flashing	Off	Off	The device is ready. The antenna is switched off.
On	Off	Off	The device is ready. The antenna is switched on.
Off	Off	On	"With presence": At least one tag is in the field. "Without presence": Communication with a tag is active.
Off	Flashing	Off	Reader is not active, a serious error has occurred. In addition, this LED also indicates the fault status through the number of flashing pulses. Reboot (operating voltage Off → On is necessary). The LED flashes once for the 'INACTIVE' status, rebooting is **not** necessary in this case.

For more detailed information on the flash codes of the reader see Chapter Error messages and flash codes for RF620R/RF630R (Page 300)

Note

LED not lit yellow?

If the LED does not light up yellow even though a tag is located within the field, common causes are:

- Incorrect configuration in the init_run command, or init_run command was not executed (see "Configuration Manual RF620R/RF630R")
- Antenna is switched off
- A tag is used, that is not compatible with the reader protocol (EPC Global Class 1 Gen 2).
- Tag is defective
- Reader or antenna has a defect
- Tag is not in the field of radiation of the transmit antenna

5.3.1.3 Pin assignment of the RS422 interface

Pin	Pin Device end 8-pin M12	Assignment
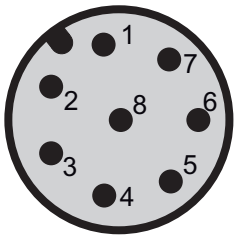	1	+ 24 V
	2	- Transmit
	3	0 V
	4	+ Transmit
	5	+ Receive
	6	- Receive
	7	Free
	8	Earth (shield)

The knurled bolt of the M12 plug is not connected to the shield (on the reader side).

Note

You must therefore not use any SIMATIC connecting cables that use the angled M12 plug.

5.3.1.4 Pin assignment of the connecting cable

Table 5- 10 RS 422 - on reader side

M12 pin	Core color	Pin assignment	View of M12 connector
1	white	24 V DC	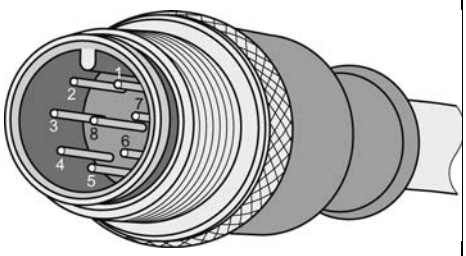
2	brown	TX neg	
3	green	GND	
4	yellow	TX pos	
5	Gray	RX pos	
6	pink	RX neg	
7	blue	Not used	
8	red	Earth (shield)	

Note

This cable has an 8-pin M12 connector at one end and the other cable end is 'open'. There are 8 color-coded single cores there for connecting to external devices. There are different cable lengths in the product range (3 m to 50 m). Long cables can be reduced if necessary.

Note

For long cables: Adapt supply voltage and data rate accordingly

Note that with long cables in particular, the supply voltage of 24 V DC must always be applied. Note also that the data rate on the serial interface must, if necessary, be reduced. (See "Configuration Manual RF620R/RF630R")

5.3.1.5 Grounding connection

The RF620R/RF630R can be electrically connected to the ground potential through a contact washer. The tightening torque must be increased in this case to ensure that electrical contact is made (2.7 Nm).

Ground connection

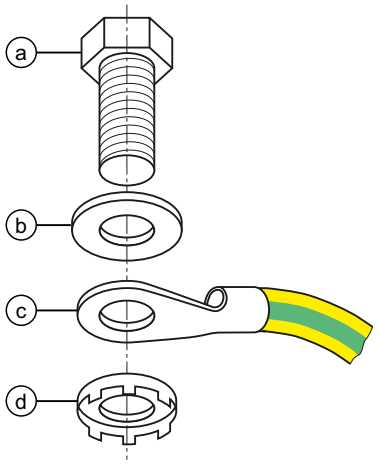

(a)	Hexagon-head screw
(b)	Plain washer
(c)	Cable lugs
(d)	Contact washer: Use contact washers according to the Siemens standard SN 70093-6-FSt-flNnnc-480h for ground connection, Siemens item No.: H70093-A60-Z3

5.3.2 Planning application

5.3.2.1 Minimum mounting clearances of two antennas of different readers

At 500 mW ERP radiated power, due to the opening angle of the antennas, their fields can overlap considerably. It is no longer possible to clarify in which antenna field access to the data of a tag is performed.

In order to avoid this, always keep a minimum distance of 3 m between two antennas of different RF630R readers with the maximum radiated power of 500 mW ERP.

Dense Reader Mode (DRM)

The readers can also interfere with each other (secondary fields), if the channels (Reader TX, Transponder TX) overlap. In order to prevent a transponder channel overlapping with a reader channel, we recommend that the Dense Reader Mode (DRM) is used.

5.3.2.2 Antenna/read point configurations

You can connect up to two external antennas to the RF630R reader. The standard setting is that two antennas are connected when the reader is started.

You have 3 possibilities for aligning the antennas and covering the read point.

One RF630R reader with two antennas and two read points

If you connect two external antennas to the device and align them in different directions, you can read tags at two different read points. With this technique, a particular antenna must be switched off application-dependently to be able to establish which tags have been read from which antenna. The reader also provides a mode for this purpose in which the antennas can be switched on and off cyclically (both antennas must be connected). Note the minimum distances between the antennas for the antenna configuration (see Chapter Specified minimum and maximum spacing of antennas (Page 47) .

One RF630R reader with two antennas and one read point

If you connect two external antennas to the device and align them in the same direction (portal configuration), you can read tags at one read point. With this method, the reader automatically switches between the two antennas while the tags are being read. Note the minimum distances between the antennas for the antenna configuration (see Chapter Specified minimum and maximum spacing of antennas (Page 47) .

One RF630R reader with one antenna and one read point

If you connect an external antenna to the device, you can read tags at one read point.

5.3.3 Installing/Mounting

5.3.3.1 Mounting/Installation

Requirement

⚠ WARNING

Ensure that the wall or ceiling can hold four times the total weight of the device.

⚠ CAUTION

Emitted radiation

The transmitter complies with the requirements of Health Canada and the FCC limit values for subjecting persons to HF radiation, provided that a minimum spacing of 26 cm exists between antenna and person. When the antennas are installed, you must therefore ensure that a minimum spacing of 26 cm is maintained between personnel and antennas.

Mounting/installing the device

You can mount the reader directly onto a flat surface.

The positions of the fixing holes for the device are shown in the section Dimension drawings (Page 133).

5.3.4 Configuration/integration

The RS422 system interface is provided for integrating the device into system environments/networks. The system interface transfers data to SIMATIC controllers or PCs with the appropriate interface.

Apart from transmitting communication data from the reader to the controller and vice versa, the RS422 interface also supplies power to the reader (24 V DC).

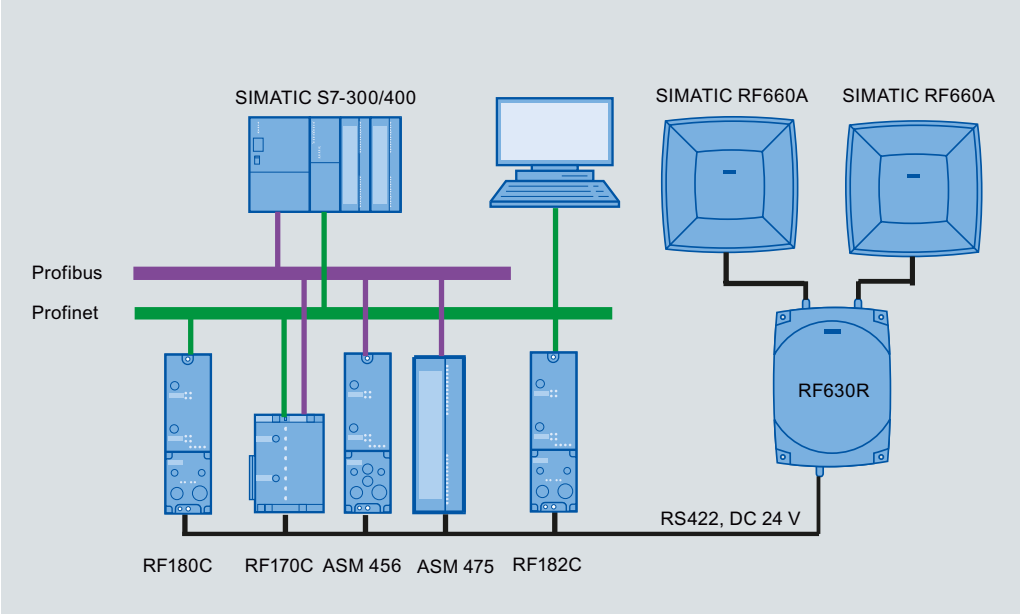

Figure 5-12 Overview of configuration of the RF630R reader

The RF620R reader can alternatively be connected to a SIMATIC controller via the ASM 456, ASM 475, RF170C and RF180C interface modules/communication modules.

The RF620R reader can alternatively also be connected directly to the PC via the RF182 communication module.

For further details on the interface modules used, see Chapter RF660R (Page 279) .

Further information about commissioning the readers can be found in the Configuration Manual "RF620R/RF630R" in the "Commissioning" section.

5.3.4.1 Transmission protocols

RS 422 communication

	3964R protocol
Transmission rates	19.2 kbps 57.6 kbps 115.2 kbps
Start bits	1
Data bits	8
Parity	Odd
Stop bits	1

5.3.5 Technical data

5.3.5.1 Mechanical data

Mechanical data		
Weight		1640 g
Dimensions (L x W x H) in mm		252 x 193 x 52 mm, without connections
Material for housing top section		ABS (GF 20)
Material for housing bottom section		Aluminum
Color of housing top section		Anthracite
Color of housing bottom section		Silver
Status displays on the device		1 LED Colors: Red, yellow, green
Interfaces		
	Antenna connections	2x RTNC plug
	RS422	1 x plug (8-pin M12)
	Software	SIMATIC S7

Thermal and electrical properties			
MTBF (Mean Time Between Failures)		16 years	
Supply voltage • Permitted range		21.6 to 30 V DC [1]	
Supply voltage		Current consumption (in standby mode, no transmit power)	Current consumption (in standby mode, no transmit power)
	20 V input voltage on the reader, typical	135 mA	2.7 W
	24 V input voltage on the reader, typical	115 mA	2.76 W
	30 V input voltage on the reader, typical	95 mA	2.85 W
Supply voltage		Current consumption (at 500 mW ERP)	Power requirement (at 500 mW ERP)
	20 V input voltage on the reader, typical	470 mA	9.4 W
	24 V input voltage on the reader, typical	395 mA	9.48 W
	30 V input voltage on the reader, typical	320 mA	9.6 W
Rampup time		7 s	

1) All supply and signal voltages must be safety extra low voltage (SELV/PELV according to EN 60950)

24 V DC power supply: safe (electrical) isolation of extra-low voltage (SELV / PELV acc. to EN 60950)

Mechanical environmental conditions	
Shock resistant to EN 60068-2-27 Vibration EN 60068-2-6	50 g[1] 20 g[1]
Climatic Conditions	
Ambient temperature during operation	-25 °C to +55 °C (a 10-minute warm-up time must be observed at an operating temperature below -20 °C)
Ambient temperature for transport and storage	-40 °C to +85 °C

1) The values for shock and vibration are maximum values and must not be applied continuously.

EMC & approvals for ETSI variant	
Electromagnetic compatibility	ETSI EN 301 489-1 / -3
	ETSI EN 302 208
Approvals	• Radio to R&TTE- guidelines EN 300 330, EN 301 489 • CE • ETSI EN 302-208 V1.1.2 • ETSI EN 302-208 V1.2.1 • Reader degree of protection acc. to EN 60529 (IP65)

EMC & approvals for FCC variant	
Electromagnetic compatibility	FCC Part 15
Approvals	• FCC, cULus • IEC60950, including US and Canadian variants of it • FCC CFR47 Part 15.247 • RoHS-compliant according to EU Directive 2002/95/EC • Industrial Canada, RSS-210, Issue 7, June 2007

5.3.5.2 Technical data according to EPC and ISO

Technical data	
Frequency accuracy	max.± 10 ppm
Channel spacing	EU, EFTA, Turkey: 200 kHz US: 500 kHz China: 250 kHz
Modulation methods	ASK: DSB modulation & PR-ASK modulation Encoding, Manchester or Pulse Interval (PIE)
Effective radiant power (the radiant power depends on the antennas and cables used, see Guidelines for selecting RFID UHF antennas (Page 147))	≤ 0.5 W ERP

ETSI frequencies	
Frequency range EU, EFTA, Turkey according to ETSI EN 302 208 V1.1.2 (commissioning until December 31, 2009)	865 to 868 MHz (10 subchannels LBT at 2 W ERP, 12 subchannels at 0.5 W ERP, 15 subchannels LBT at 0.1 W ERP)
Frequency bands for EU, EFTA, Turkey: according to ETSI EN 302 208 V1.2.1 (valid since November 4, 2008, publication in the Official Journal of the European Union)	• 865.7 MHz • 866.3 MHz • 866.9 MHz • 867.5 MHz (4 channels LBT optional at max. 2 W ERP)

Read distance for EU, EFTA, Turkey / China	
Antennas mounted on opposing sides (portal configuration)	max. 3.5 m (recommended maximum value for configuration)
Antennas mounted on the same side	Max. 2 m (recommended maximum value for configuration; depending on the transponder)

FCC frequencies	
North American frequency band	902 ... 928 MHz (50 channels, frequency hopping)
Frequency band for China	920.125 to 924.875 MHz (16 subchannels at 2 W ERP, 20 subchannels at 0.1 W ERP)

Read distance for USA	
Antennas mounted on opposing sides (portal configuration)	max. 3.5 m (recommended maximum value for configuration)
Readers mounted on the same side	max. 2 m (recommended maximum value for configuration)

5.3.5.3 Maximum number of readable tags

The maximum number of readable tags depends on the following parameters:

- Size of the antenna field
- Readability of the tags

For a transmit power of 500 mW ERP, the following is read when the tag RF620T is used:

- Max. 40 tags in the antenna field (tags perpendicular to antenna at 1 m distance). If 2 antennas are used, up to 80 tags can be recognized.
- Max. 18tags per second

Note for 2-antenna operation

- If 2 antennas are connected to the SIMATIC RF630R, the antennas must be controlled using the SET-ANT command.
- If 2 antennas are configured as a gate, both antennas should be simultaneously switched on with the SET-ANT command. The reader multiplexes both antennas internally. The multiplexing time is 100 ms (internal changeover time from antenna to antenna).

5.3.6 Dimension drawings

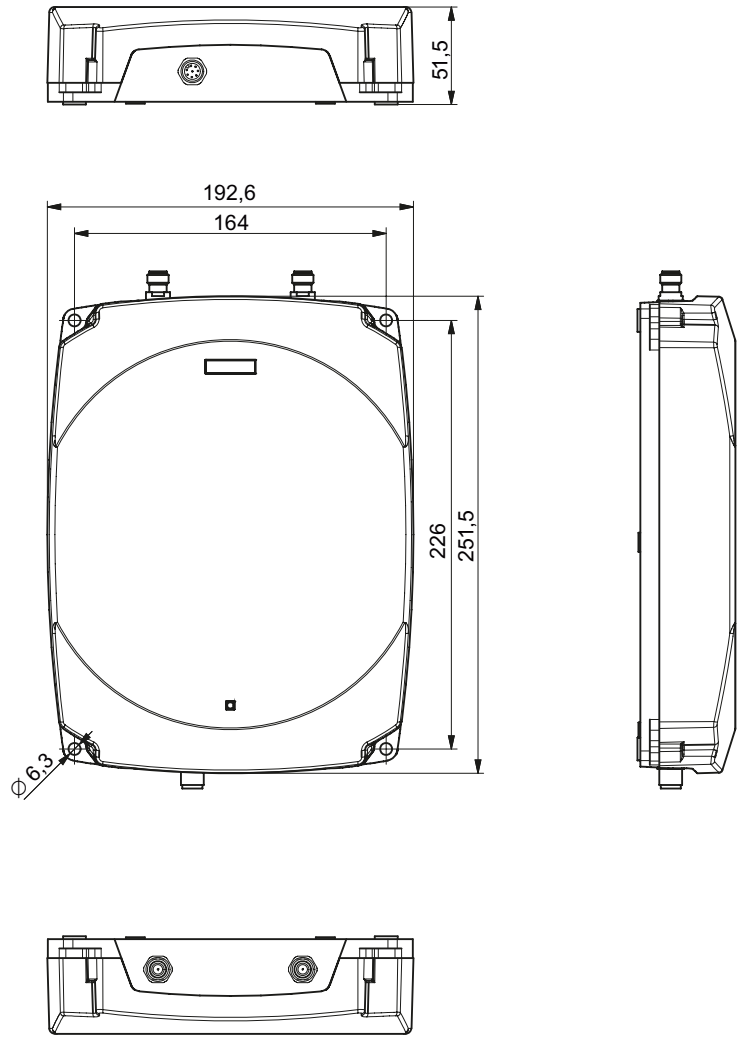

Figure 5-13 Dimension drawing for RF630R

All dimensions in mm

5.3.7 Certificates and approvals

Table 5- 11 6GT2811-4AA00-0AA0

Certificate	Designation
CE	CE approval according to R&TTE guideline

Table 5- 12 6GT2811-4AA00-1AA0

Standard	
FC Federal Communications Commission	FCC CFR 47, Part 15 sections 15.247 Radio Frequency Interference Statement This equipment has been tested and found to comply with the limits for a Class B digital device, pursuant to Part 15 of the FCC Rules. FCC ID: NXW-RF630R
Industry Canada Radio Standards Specifications	RSS-210 Issue 7, June 2007, Sections 2.2, A8 IC: 267X-RF630
c UL us	This product is UL-certified for the USA and Canada. It meets the following safety standard(s): UL 60950-1 - Information Technology Equipment Safety - Part 1: General Requirements CSA C22.2 No. 60950 -1 - Safety of Information Technology Equipment UL Report E 205089

5.3.7.1 FCC information

Siemens SIMATIC RF630R (FCC): 6GT2811-4AA00-1AA0

FCC ID: NXW-RF630R

This device complies with part 15 of the FCC rules.
Operation is subject to the following two conditions:

(1) This device may not cause harmful interference, and

(2) This device must accept any interference received, including interference that may cause undesired operation.

Caution

Any changes or modifications not expressly approved by the party responsible for compliance could void the user's authority to operate the equipment.

Note

This equipment has been tested and found to comply with the limits for a Class B digital device, pursuant to part 15 of the FCC Rules. These limits are designed to provide reasonable protection against harmful interference when the equipment is operated in a commercial environment. This equipment generates, uses, and can radiate radio frequency energy and, if not installed and used in accordance with the instruction manual, may cause harmful interference to radio communications. Operation of this equipment in a residential area is likely to cause harmful interference in which case the user will be required to correct the interference at his own expense.

FCC Notice To comply with FCC part 15 rules in the United States, the system must be professionally installed to ensure compliance with the Part 15 certification.

It is the responsibility of the operator and professional installer to ensure that only certified systems are deployed in the United States. The use of the system in any other combination (such as co-located antennas transmitting the same information) is expressly forbidden.

FCC Exposure Information To comply with FCC RF exposure compliance requirements, the antennas used for this transmitter must be installed to provide a separation distance of at least 20 cm from all persons and must not be co-located or operating in conjunction with any other antenna or transmitter.

5.3.7.2 IC-FCB information

Siemens SIMATIC RF630R (FCC): 6GT2811-4AA00-1AA0

IC: 267X-RF630

Industry Canada Notice To reduce potential radio interference to other users, the antenna type and its gain should be so chosen that the equivalent isotropically radiated power (e.i.r.p.) is not more than that permitted for successful communication.

This device has been designed to operate with the SIMATIC RF660A antenna 902-928 listed below, and having a maximum gain of 5,5 dBi.

Other antennas or antennas having a gain greater than 5,5 dBi are strictly prohibited for use with this device.

The required antenna impedance is 50 Ohms.

Antennas

6

6.1 RF660A antenna

6.1.1 RF660A description

The RF660A is a stationary antenna, specially designed for the RF660R reader.

The antenna is available in two different frequency bands that have been specified for the regions of Europe, China and USA respectively.

Frequency band

- The antenna for Europe operates in the frequency band of 865 to 868 MHz.
- The antenna for China and the USA operates in the frequency band of 902 to 928 MHz.

Design of the RF660A

The antenna is installed in a rectangular plastic housing.

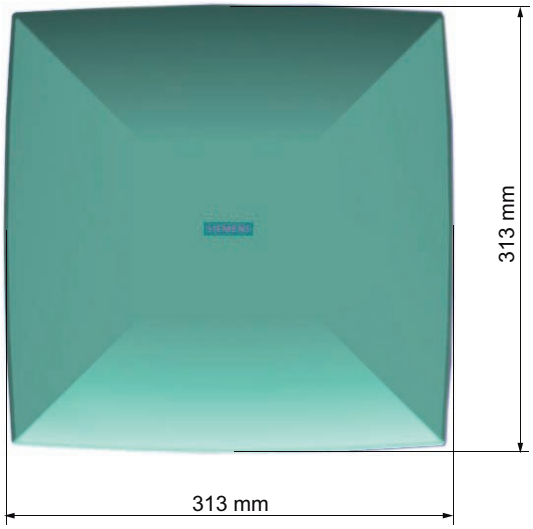

Front view

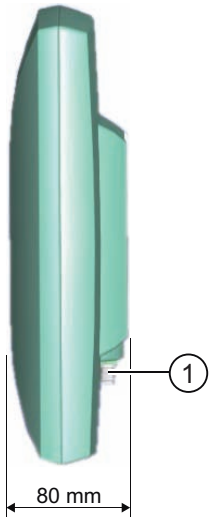

Side view

① RTNC connection

6.1.2 Antenna pattern

Spatial directional radiation pattern

The following schematic diagram shows the main and auxiliary fields of the RF660A antenna in free space in the absence of reflecting/absorbing materials. Please note that the diagram is not to scale.

The recommended working range lies within the main field that is shown in green.

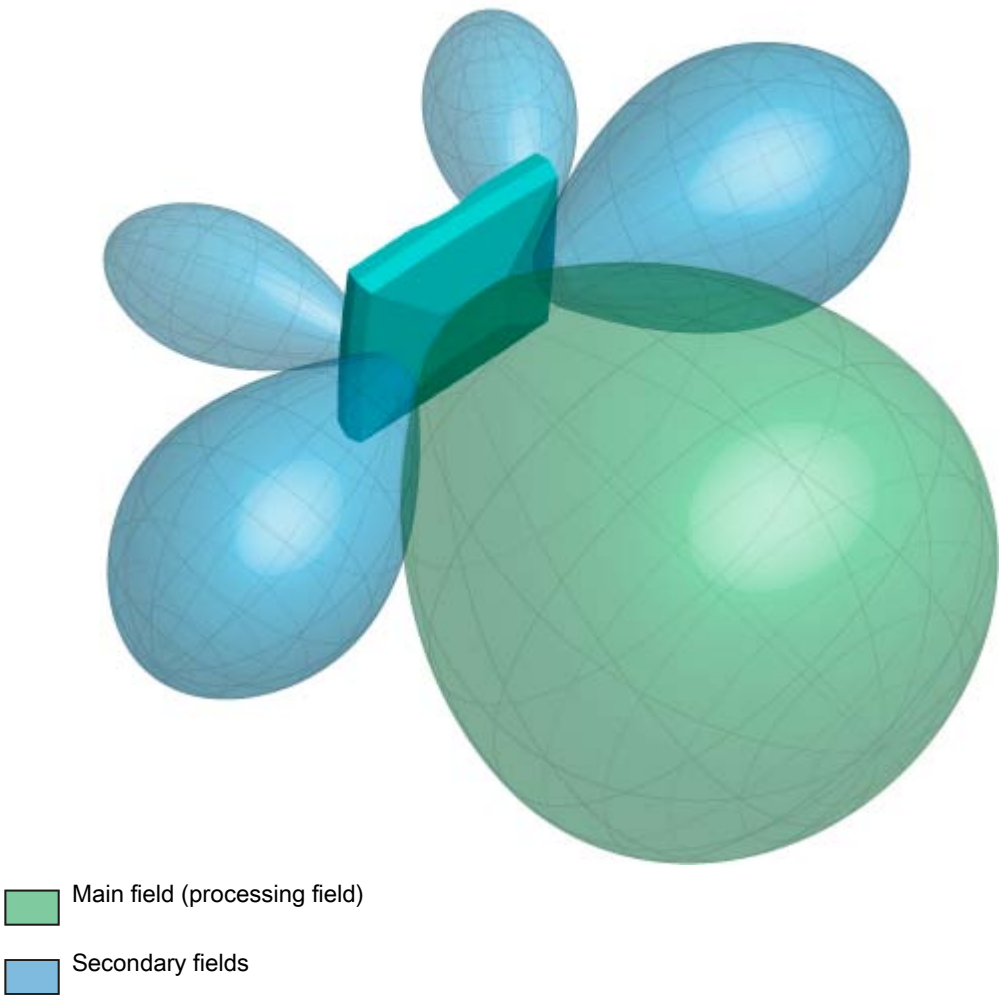

Figure 6-1 Main and auxiliary fields of the RF660A antenna

Radiation diagram (horizontal)

Europe (ETSI)

The radiation diagram is shown for horizontal alignment and for a center frequency of 865 MHz. Horizontal antenna alignment is provided when the TNC connection on the antenna points vertically up or down.

The radiating/receiving angle of the antenna is defined by the angle between the two -3 dB points (corresponding to half the power referred to the maximum performance at a 0° angle).

The optimum radiating/receiving angle is therefore approximately ±30 degrees.

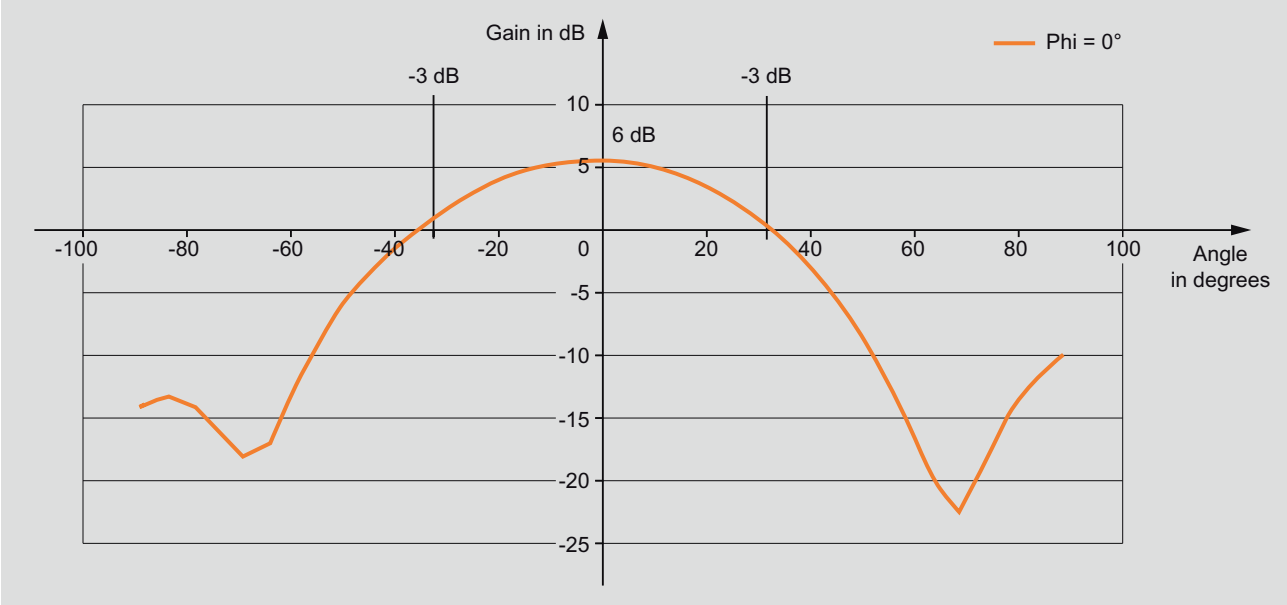

Figure 6-2 Directional radiation pattern of the antenna (at 865 MHz, horizontal alignment)

USA (FCC)

The radiation diagram is shown for horizontal alignment and for a center frequency of 915 MHz.

The radiating/receiving angle of the antenna is defined by the angle between the two -3 dB points (corresponding to half the power referred to the maximum performance at a 0° angle).

The optimum radiating/receiving angle is therefore approximately ±35 degrees.

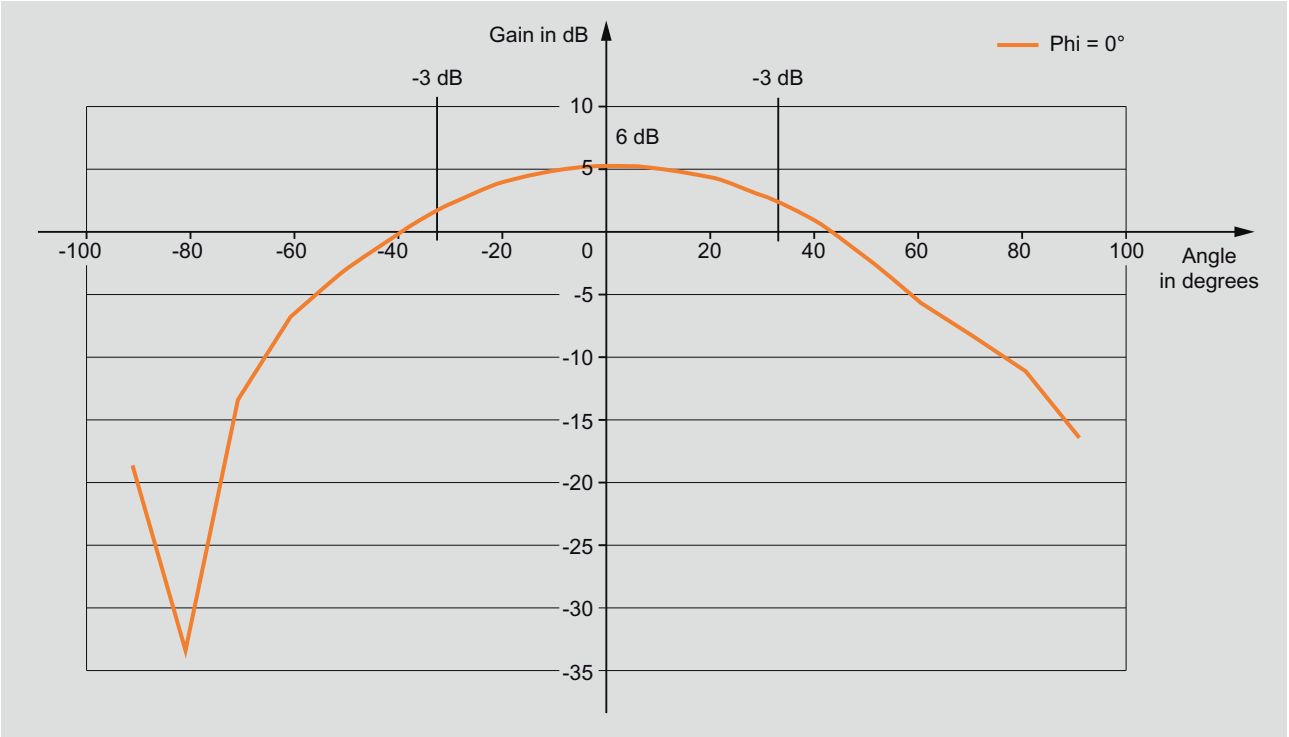

Figure 6-3 Directional radiation pattern of the antenna (at 915 MHz, horizontal alignment)

Ordering data

Description	Machine-Readable Product Code
RF660A antenna for Europe incl. mounting plate (865-868)	6GT2812-0AA00
RF660A antenna for China and the USA incl. mounting plate (902-928)	6GT2812-0AA01

Accessories

Description		Machine-Readable Product Code
Antenna mounting kit		6GT2890-0AA00
Connecting cable between reader and antenna	10 m	6GT2815-0AN10
	20 m	6GT2815-0AN20

6.1.3 Installation and assembly

The RF660A antenna can be fixed to any firm support.

Mounting types

There are two possibilities for fixing the antenna:

- The antenna features a standardized VESA 100 mounting system.
- Additional mounting types are possible:
  - Antenna mounting plates included in delivery
  - Antenna mounting kit available as an accessory

6.1.3.1 Mounting with antenna mounting plate

Rigid fixing with an antenna mounting plate is suitable for:

- Wall mounting on solid foundations
- Mast mounting

Antenna with antenna mounting plate	Description
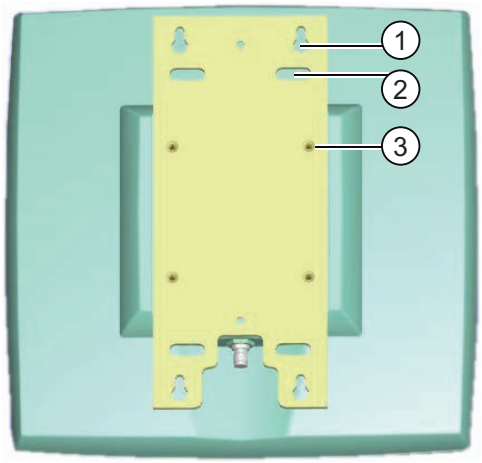	① Keyhole for wall mounting (4 x) ① Elongated hole for mast mounting (4 x) ③ Standardized VESA 100 fixing holes (4 x M4)
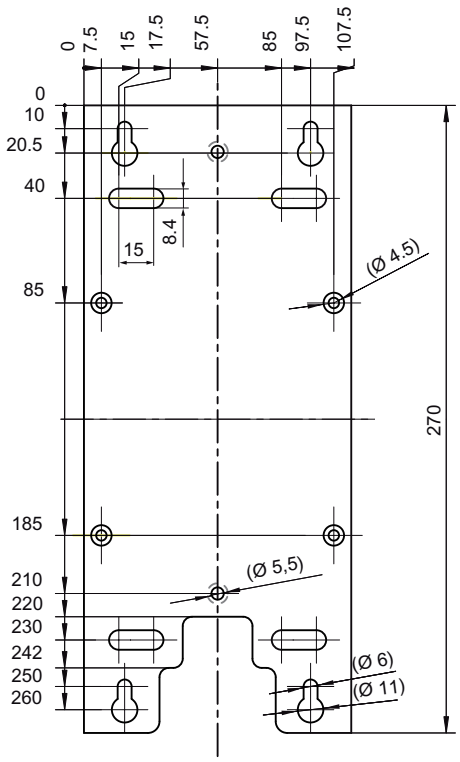	Dimensions for fixing holes All dimensions in mm

Antenna with antenna mounting plate	Description
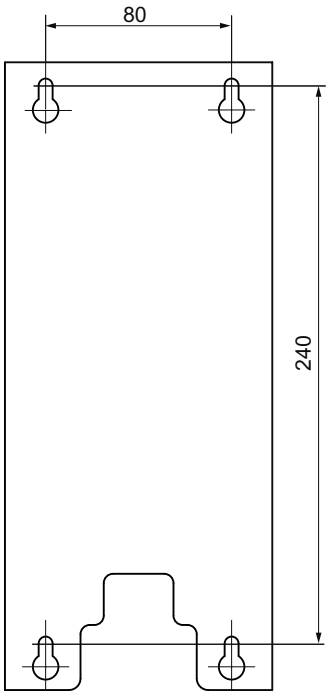	Template for wall fixing for M6 bolts (hexagon bolts are required)
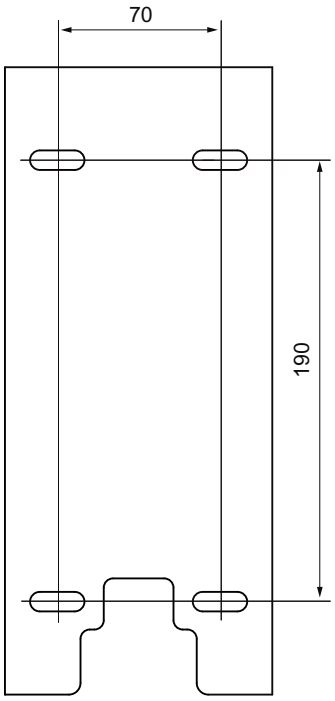	Template for mast mounting Mast diameter 60 to 80 mm

6.1.3.2 Mounting with antenna mounting kit

Flexible mounting is possible using the antenna mounting kit.
An antenna can then be rotated through any angle in space.

NOTICE
Please note that the tightening torques for the M4 screws on the rear of the RF620R/RF630R reader must not exceed 1.3 Nm.

Antenna mounting kit	Description
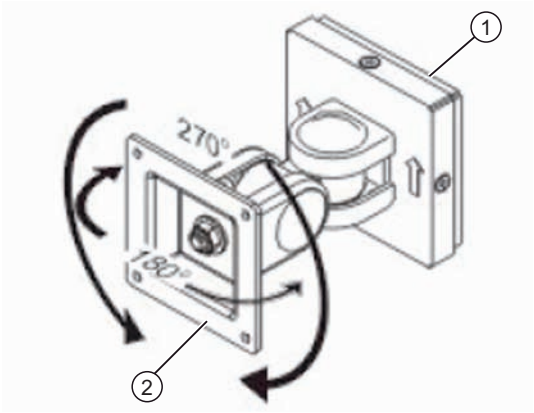	Swivel range of wall mounting (1) Wall side (2) Antenna side
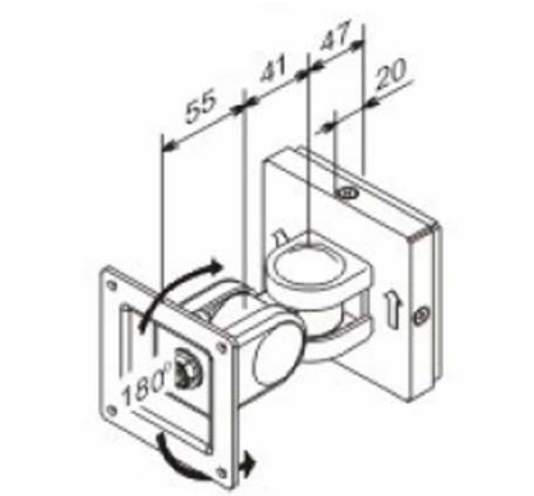	Distances for wall mounting

Antenna mounting kit	Description
	VESA adapter plate from VESA 75 x 75 to VESA 100 x 100 The VESA adapter plate is required for fixing the antenna to the antenna mounting kit.
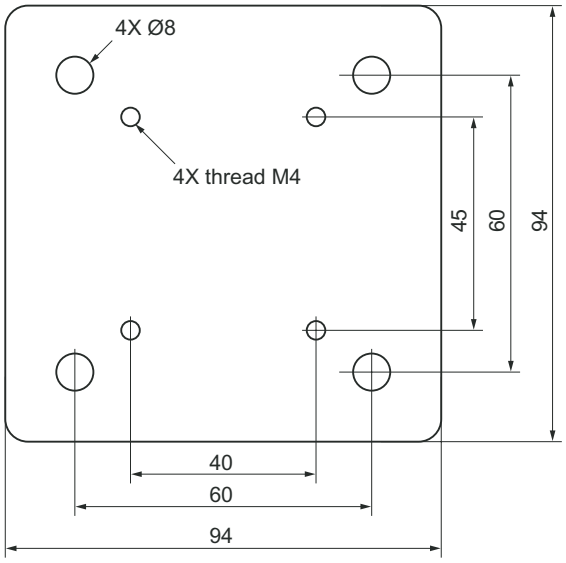	Hole drilling template for fixing the antenna mounting kit to the wall

6.1.4 Connecting an antenna to a reader

NOTICE
Use of Siemens antenna cable To ensure optimum functioning of the antenna, it is urgently recommended that a Siemens antenna cable is used in accordance with the list of accessories.

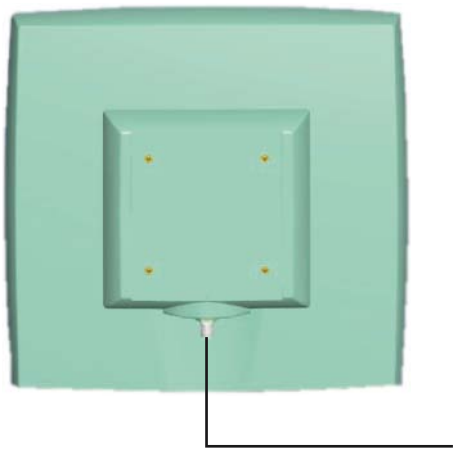

Figure 6-4 Rear of antenna with RTNC connection

Connecting RF660A to RF660R

Preassembled standard cables in lengths of 10 m and 20 m are available for connection.

The cable between antenna and reader can be up to 20 m in length.

When less than four antennas are used, we recommend that the antennas are connected to the reader as follows:

Number of antennas	Connections on the reader
2 antennas	ANT 1, ANT 2
3 antennas	ANT 1, ANT 2, ANT 3

Connecting RF660A to RF630R

Preassembled standard cables in lengths of 3 m, 10 m and 20 m are available for connection.

The cable between antenna and reader can be up to 20 m in length.

When one antenna is used, it is recommended that the remaining antenna connection is sealed using the supplied protective cap.

6.1.5 Technical specifications

	RF660A antenna 865-868	RF660A antenna 902-928
Material	Silicone-free	Silicone-free
Frequency band	865-868 MHz	902-928 MHz
Impedance	50 Ohm nominal	50 Ohm nominal
Antenna gain	5-7 dBil	> 6 dBic
VSWR (standing wave ratio)	2:1 max.	2:1 max.
Polarization	RH circular	RH circular
Radiating/receiving angle	55°- 60°	60° - 75°
Connector	RTNC	RTNC
Degree of protection	IP67	IP67
Permissible ambient temperature	-25° C to +75° C	-25° C to +75° C

6.2 Guidelines for selecting RFID UHF antennas

6.2.1 Note safety information

⚠ WARNING

Before planning how to use third-party components, as the operator of a system that comprises both RF600 components and third-party components, you must comply with the safety information in Section Safety instructions for third-party antennas as well as for modifications to the RF600 system (Page 16).

6.2.2 Introduction

6.2.2.1 About this documentation

Target group

This documentation has been prepared for configuration engineers who thoroughly understand and wish to carry out the selection and installation of an external antenna or an external cable for the SIMATIC RF600 system. The various antenna and cable parameters are explained, and information is provided on the criteria you must particularly observe. Otherwise this documentation is equally suitable for theoretical and practice-oriented users.

Purpose of this document

The document enables you to select the appropriate external antenna or cable with consideration of all important criteria and to carry out the corresponding settings in the configuration software of the SIMATIC RF600 system. Correct and safe integration into the SIMATIC RF600 system is only possible following adaptation of all required parameters.

History

Edition	Comment
12/2007	First edition

6.1.5 Technical specifications

	RF660A antenna 865-868	RF660A antenna 902-928
Material	Silicone-free	Silicone-free
Frequency band	865-868 MHz	902-928 MHz
Impedance	50 Ohm nominal	50 Ohm nominal
Antenna gain	5-7 dBil	> 6 dBic
VSWR (standing wave ratio)	2:1 max.	2:1 max.
Polarization	RH circular	RH circular
Radiating/receiving angle	55°- 60°	60° - 75°
Connector	RTNC	RTNC
Degree of protection	IP67	IP67
Permissible ambient temperature	-25° C to +75° C	-25° C to +75° C

6.2 Guidelines for selecting RFID UHF antennas

6.2.1 Note safety information

⚠ WARNING

Before planning how to use third-party components, as the operator of a system that comprises both RF600 components and third-party components, you must comply with the safety information in Section Safety instructions for third-party antennas as well as for modifications to the RF600 system (Page 16).

6.2.2 Introduction

6.2.2.1 About this documentation

Target group

This documentation has been prepared for configuration engineers who thoroughly understand and wish to carry out the selection and installation of an external antenna or an external cable for the SIMATIC RF600 system. The various antenna and cable parameters are explained, and information is provided on the criteria you must particularly observe. Otherwise this documentation is equally suitable for theoretical and practice-oriented users.

Purpose of this document

The document enables you to select the appropriate external antenna or cable with consideration of all important criteria and to carry out the corresponding settings in the configuration software of the SIMATIC RF600 system. Correct and safe integration into the SIMATIC RF600 system is only possible following adaptation of all required parameters.

History

Edition	Comment
12/2007	First edition

6.2.3 General application planning

6.2.3.1 Overview of the total SIMATIC RF600 system and its influencing factors

The following graphic shows the design of the total SIMATIC RF600 system and the factors which have an influence on the total system.

You must be aware of these influencing factors and also consider them if you wish to integrate third-party components such as antennas or cables into the system. These influencing factors are described in more detail in Sections Antennas (Page 153) and Antenna cables (Page 165).

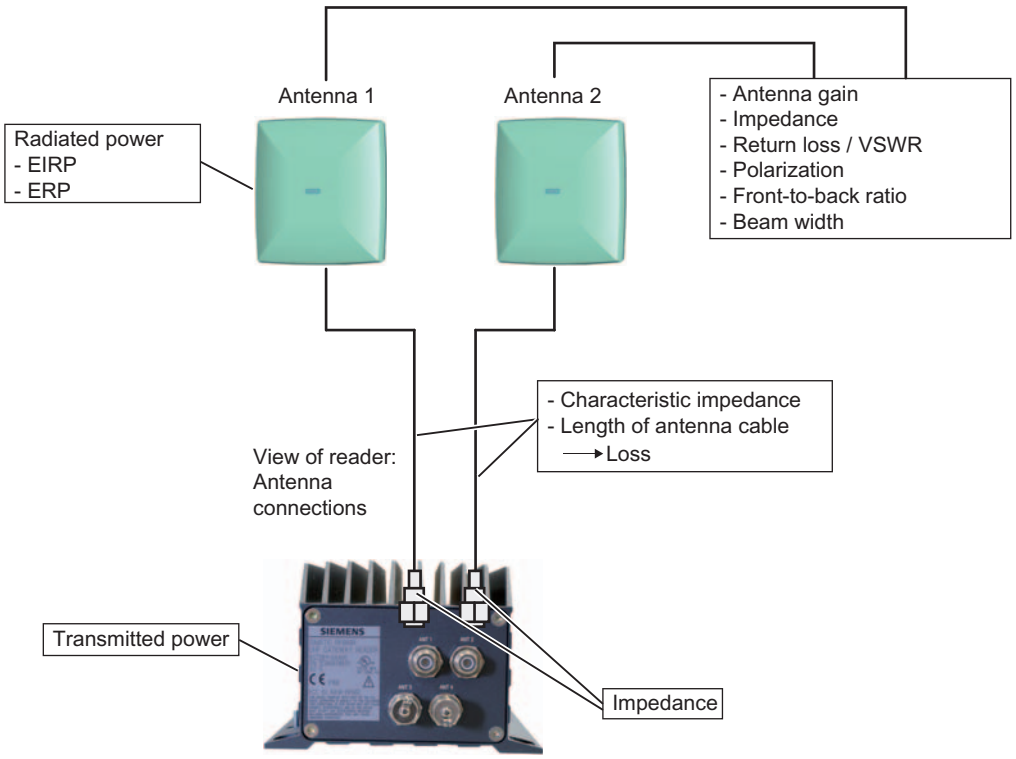

Figure 6-5 Overview of total system and influencing factors

When operating the RF600 system, additional influencing factors must also be observed such as minimum spacing between antennas in the room. You will find this information in the System Manual "SIMATIC RF600".

6.2.3.2 Environmental conditions

CAUTION
Damage to the device In line with the application, you must take into consideration the mechanical loads (shock and vibration) as well as environmental demands such as temperature, moisture, UV radiation. The device could be damaged if these factors are not considered.

6.2.3.3 General procedure

Depending on whether you wish to use a third-party antenna or antenna cable - or both - in combination with the SIMATIC RF660R reader, these instructions will help you to select the components and to set the important parameters in the SIMATIC RF660R configuration software.

There are two different application cases:

- Selection of third-party components:
  you wish to select appropriate third-party components for the SIMATIC RF600 system and to subsequently configure the reader for these components.
- Configuration of existing third-party components:
  you already have third-party components (antenna, antenna cable or both) and wish to appropriately configure the reader for these components.

Procedure for selecting third-party components

Always proceed in the following order during your considerations and the practical implementation:

1. Consider which third-party components you wish to use in the SIMATIC RF600 system.
2. Depending on the third-party component required, refer either to Section Antennas (Page 153) or Section Antenna cables (Page 165) for the important criteria for selection of your components. The selection criteria/parameters are sorted in descending relevance.
3. Use the specified equations to calculate your missing parameters, and check whether the required values are reached (e.g. antenna gain) and that important secondary values (e.g. cable loss) are not exceeded or undershot.
4. Configure the reader with the parameters of your third-party components. You can usually carry this out in the SIMATIC RF660R configuration software. The exact procedure is described in Section Setting of parameters in the SIMATIC RF660R configuration software (Page 168).
5. For advanced users or in exceptional cases, e.g. input of an antenna gain <4.0 dBi), it is recommendable to carry out the configuration directly using XML commands. For further information, refer to Section .

Procedure for configuration of existing third-party components

If you already have third-party components which you wish to integrate into the SIMATIC RF600 system, proceed as follows:

1. Depending on the third-party component, refer either to Section "Antennas" or Section "Antenna cables" for the important criteria of your components. The parameters are sorted in descending relevance.
2. Compare the limits with the data of your antenna or cable vendor.
3. Subsequently proceed exactly as described above in "Procedure for selecting third-party components" from Paragraph 3. onwards.

6.2.4 Antennas

6.2.4.1 Types of antenna and properties

Basically all types of directional antennas can be considered as third-party antennas for integration into the SIMATIC RF600 system. Directional antennas have a preferred direction in which more energy is radiated than in other directions.

6.2.4.2 Antenna parameters

Overview

The properties of an antenna are determined by a large number of parameters. You must be aware of these properties in order to make the correct selection for your appropriate UHF antenna. The most important parameters are described below. These important parameters are described in detail in the following sections. The following parameters describe both the send and receive functions of the antenna (reciprocity). The antenna is a passive antenna. A two-way relationship exists.

- Radiated power
- Antenna gain
- Impedance
- Return loss / VSWR
- Power rating
- Polarization
- Front-to-back ratio
- Beam width

Radiated power

In order to comply with national directives with regard to the radiated power (which differ depending on the location or country of use), the RF660R reader together with the antenna cable(s) and antenna(s) must be exactly parameterized or configured.

This means that the product of the transmitted power P_0 of the reader and the antenna gain G must always have the correct ratio with regard to the radiated power "EIRP" depending on the location of use or the permissible frequency range.

Calculation of the radiated power is briefly described below.

Calculation of the radiated power

The radiated power is the total power radiated by the antenna in the room. The isotropic radiator serves as the physical computing model which uniformly radiates the power into the room (spherically).

EIRP

Directional antennas combine the radiation, and therefore have a higher power density in the main beam direction compared to an isotropic radiator. To enable antennas of different design or directional characteristic to be compared with one another, the equivalent isotropic radiated power (EIRP) has been introduced which represents the effective power which must be applied to an isotropic radiator in order to deliver the same power density in the main beam direction of the antenna.

EIRP is the product of the transmitted power P_0 and the antenna gain G:

$EIRP = P_0 * G$

ERP

Also common is specification of the equivalent radiated power referred to the half-wave dipole "ERP" (effective radiated power):

$$ERP = P_0 * G_d = P_0 * \frac{G}{1{,}64}$$

Logarithmic and standardized data

Approximate calculations are easier to carry out as additions than as products, therefore the logarithms are taken for the above equations and the power data standardized to 1 mW and specified in decibels (dBm or dBi).

$$\frac{EIRP}{dBm} = \frac{P_0}{dBm} + \frac{G}{dBi}$$

Calculation of the radiated power with consideration of the cable loss a_k

If the transmitted power is not applied directly but via a cable with loss a_K, this loss should be compensated such that the same radiated power is obtained.

$$\frac{EIRP}{dBm} = \frac{P_0}{dBm} + \frac{G}{dBi} - \frac{a_k}{dB} \text{ if } \quad a_k > 0$$

If the loss is not appropriately compensated, the radiated power is too small.

General preliminary information on the unit "dB"

Requirements

This section provides you with information on the unit "decibel". This knowledge is a requirement for optimum understanding of the following section. You can ignore this section if you already have the appropriate knowledge.

Definition

When specifying decibels, the ratios between powers or voltages are not defined directly but as logarithms. The decibel is therefore not a true unit but rather the information that the specified numerical value is the decimal logarithm of a ratio of two power or energy variables P1 and P2 of the same type.

This ratio is defined by the following equation:

$$a = 10 * \log_{10}\left(\frac{P_1}{P_2}\right) dB$$

Example:

If P1 = 200 W and P2 = 100 mW, how large is the ratio a in dB?

$$a = 10 * \log_{10}\left(\frac{P_1}{P_2}\right) dB =$$

$$= 10 * \log_{10}(2000)\, dB =$$

$$= 33{,}01 \text{ dB}$$

Use with other units

As with other units, there are also different versions of the unit for decibel depending on the reference variable. With this reference, the logarithmic power ratio becomes an absolute variable. The following table lists the most important combinations in this context with other units:

Versions of decibel	Description
0 dBm	Power level with the reference variable 1 mW.
dBi	Power level with the reference variable on the isotropic spherical radiator (see also Section Antenna gain (Page 157)).

Antenna gain

Definition

The antenna gain specifies the degree to which the antenna outputs or receives its power in the preferred angle segment.

With this theoretical variable, a comparison is always made with an isotropic spherical radiator, a loss-free antenna which does not exist in reality. It describes how much power has to be added to the isotropic spherical radiator so that it outputs the same radiated power in the preferred direction like the antenna to be considered. The unit for the antenna gain is therefore specified in dBi (dB isotropic).

The antenna gain is defined for the receive case as the ratio between the power received in the main beam direction and the received power of the isotropic spherical radiator.

Specifications

You must know the antenna gain in the corresponding frequency band or range. You can obtain the value of the antenna gain from the technical specifications of your antenna vendor.

- With a cable loss of 4 dB, a gain ≥ 6 dBi(L) is required since otherwise the maximum radiated power will not be achieved.
- In the case of antennas used in the FCC area of approval, a gain of at least 6 dBi(L) is required since otherwise the permissible radiated power of 4 W EIRP will not be reached.
- If the gain is > 6 dBi(L)*, the difference is compensated in accordance with the directives by reducing the transmitted power.

* (L) is the reference to the linear polarization.

Dependencies

- Frequency dependency:
  if a frequency dependency exists in the frequency band used, you must apply the highest value in each case for the antenna gain. With the cable loss, on the other hand, you must select the smallest value in each case it frequency dependency exists.
  This procedure means that the permissible radiated power will not be exceeded in the extreme case.
- Dependency on plane:
  If the data for the antenna gain are different in the horizontal and vertical planes, you must use the higher value in each case.

Impedance

Definition

Impedance is understood as the frequency-dependent resistance. The impedances of the antenna, reader and antenna cables should always be the same. Differences in the impedance result in mismatching which in turn means that part of the applied signal is reflected again and that the antenna is not fed with the optimum power.

Specifications

- Only antennas can be used whose connection has a characteristic impedance of Z = 50 Ohm.
- The mechanical design of the coaxial antenna connection is of secondary importance; N, TNC and SMA plug connectors are usual.

Return loss / VSWR

Definition

Since the impedance at the antenna connection is frequency-dependent, mismatching automatically occurs with broadband use. This mismatching can be reflected by two parameters:

- The voltage standing wave ratio VSWR
- The return loss

Voltage standing wave ratio VSWR

The power sent by the transmitter cannot flow unhindered to the antenna and be radiated as a result of the mismatching described by the VSWR. Part of the power is reflected at the antenna and returns to the transmitter. The powers in the forward and reverse directions produce a standing wave which has a voltage maximum and a voltage minimum. The ratio between these two values is the VSWR (voltage standing wave ratio).

Return loss

The return loss parameter is based on the reflection factor which describes the voltage ratio between the forward and reverse waves.

Specifications

So that the smallest possible transmitted and received powers are reflected by the antenna under ideal conditions, you should observe the following data for the VSWR and the return loss $|S_{11}|$/ dB in the respective frequency band (865-870 MHz or 902-928 MHz):

- VSWR < 1.24:1 or
- $|S_{11}|$/ dB ≥ 20 dB

Power rating

Definition

The power rating is understood as the maximum power defined by the vendor with which the device may be operated.

Specifications

Third-party antennas must be dimensioned for an effective power applied to the antenna connection of at least 4 Watt.

Polarization

Definition

The polarization parameter describes how the electromagnetic wave is radiated by the antenna. A distinction is made between linear and circular polarization. With linear polarization, a further distinction is made between vertical and horizontal polarization.

Specifications

UHF transponders usually have a receive characteristic similar to that of a dipole antenna which is linearly polarized. Horizontal or vertical polarization is then present depending on the transponder mounting.

Selection of circular polarized antenna

If the orientation of the transponder is unknown, or if an alternating orientation can be expected, the transmit and receive antennas must have circular polarization.

When selecting a circular antenna, the polarization purity must be observed in addition to the polarization direction. A differentiation is made between left-hand and right-hand circular polarization (LHCP and RHCP). The two types cannot be combined in the same system. On the other hand, selection of the polarization direction is insignificant if the antenna system of a transponder is linearly polarized. With actual antennas, elliptical polarization is encountered rather than the ideal circular polarization. A measure of this is the ratio between the large and small main axes of the ellipse, the axial ratio (AR), which is frequently specified as a logarithm.

Axial ratio	AR
Ideal	0 dB
Real	2-3 dB

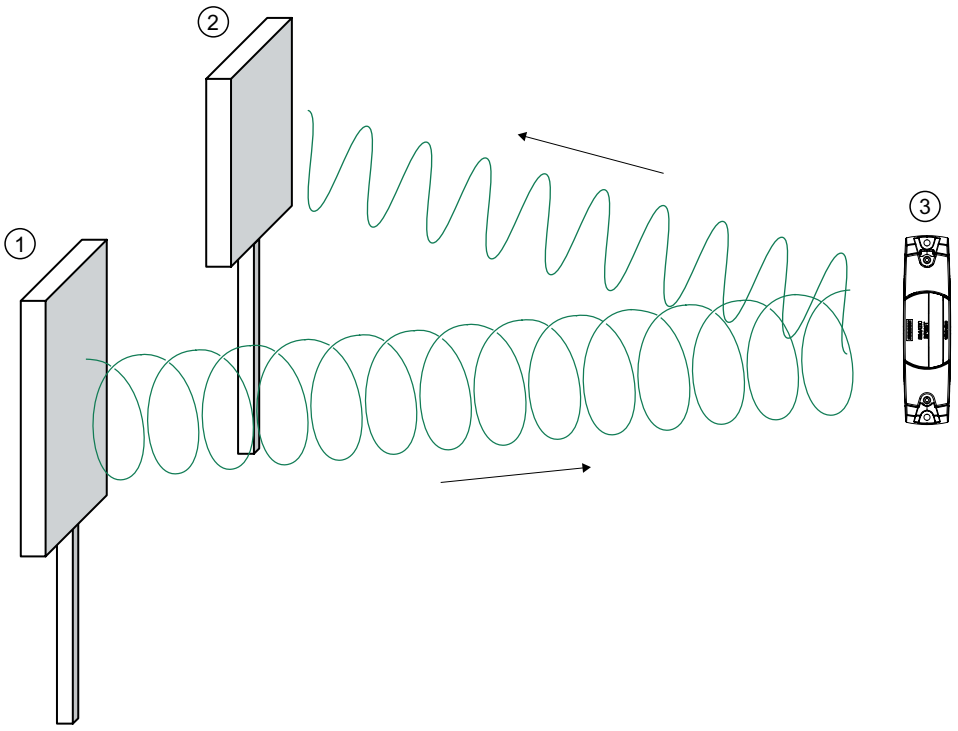

Figure 6-6 Circular polarization of antenna system and transponder

Selection of linear polarized antenna

When using linear polarized antennas, you must always make sure that the transmitter antenna, receiver antenna and transponder have identical polarizations (vertical or horizontal). As a result of the principle used, no special requirements need be observed to suppress the orthogonal components (cross-polarization).

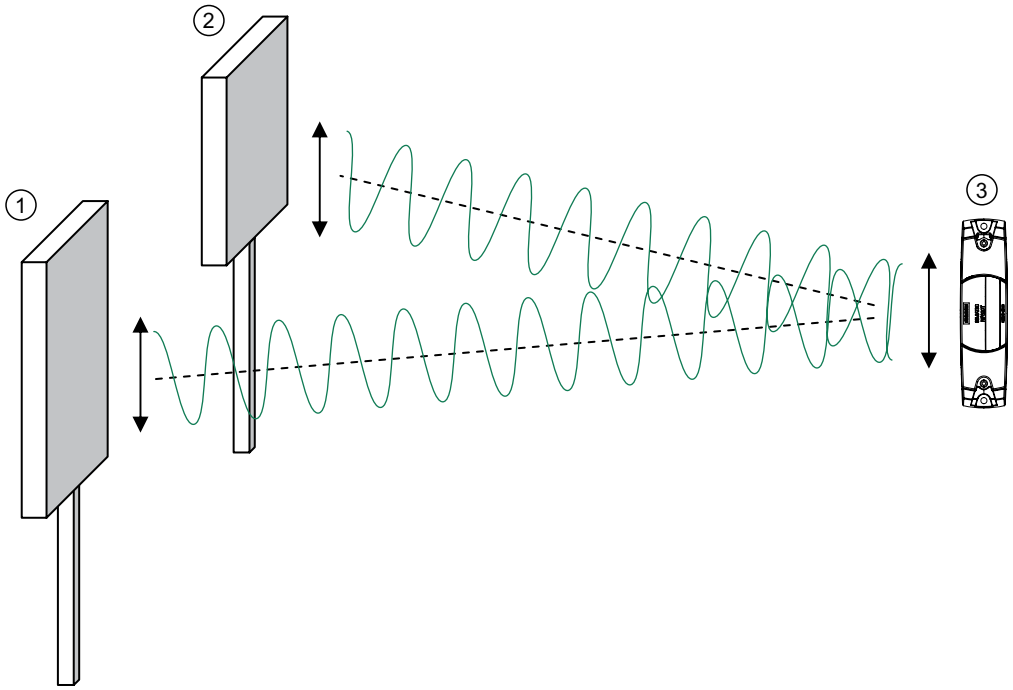

① Transmitter antenna, vertical polarization
② Receiver antenna, vertical polarization
③ Transponder dipole

Figure 6-7 Homogenous vertical polarization of antenna system and transponder

Front-to-back ratio

Definition

As a result of their design, directional antennas not only transmit electromagnetic waves in the main beam direction but also in other directions, particularly in the reverse direction. The largest possible suppression of these spurious lobes is expected in order to reduce faults and to keep the influence on other radio fields low. This attenuation of spurious lobes in the opposite direction to the main beam is called the front-to-back ratio.

Specifications

Requirement: The front-to-back ratio must be ≥ 10 dB. This requirement also applies to spurious lobes illustrated by the following graphics in Section Beam width (Page 162).

Beam width

Definition

A further description of the directional characteristic is the beam width. The beam width is the beam angle at which half the power (-3 dB) is radiated referred to the maximum power. The antenna gain is directly related to the beam width. The higher the antenna gain, the smaller the beam angle.

Coupling in ETSI

In ETSI EN 302 308 (release version V1.1.2 2006-07), the radiated power is coupled to the beam width, i.e.

- Radiated power 500-2000 mW ERP: beam width ≤ 70 degrees
- Radiated power < 500 mW ERP: beam width ≤ 90 degrees

The beam width requirement applies to both the horizontal and vertical planes. The FCC directives do not envisage coupling with the beam width.

The following graphics show examples of the directional characteristic of an antenna in polar and linear representations for which both the horizontal and vertical planes must be considered.

Directional radiation pattern in polar representation

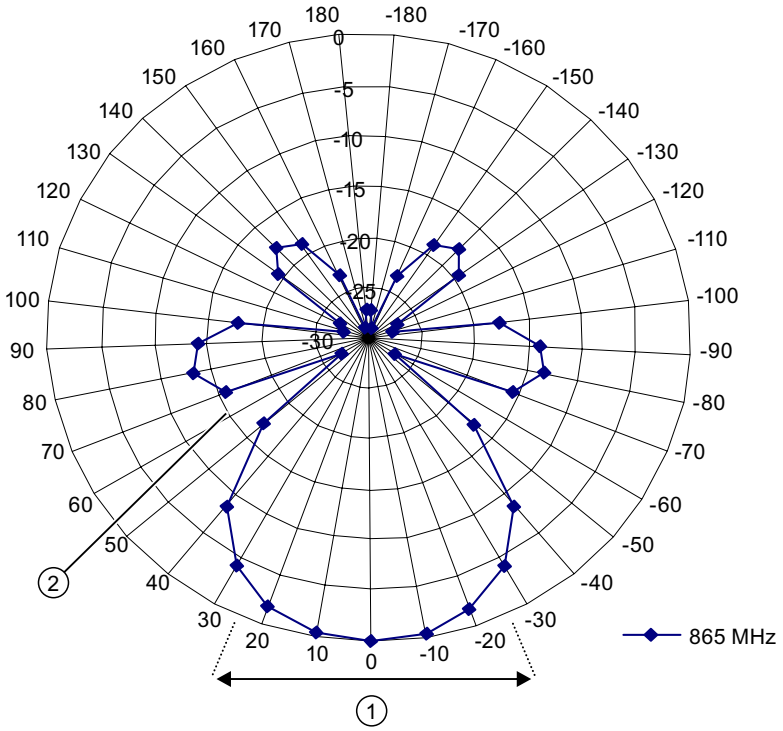

①	Beam width
②	Spurious lobe

Directional radiation pattern in linear representation

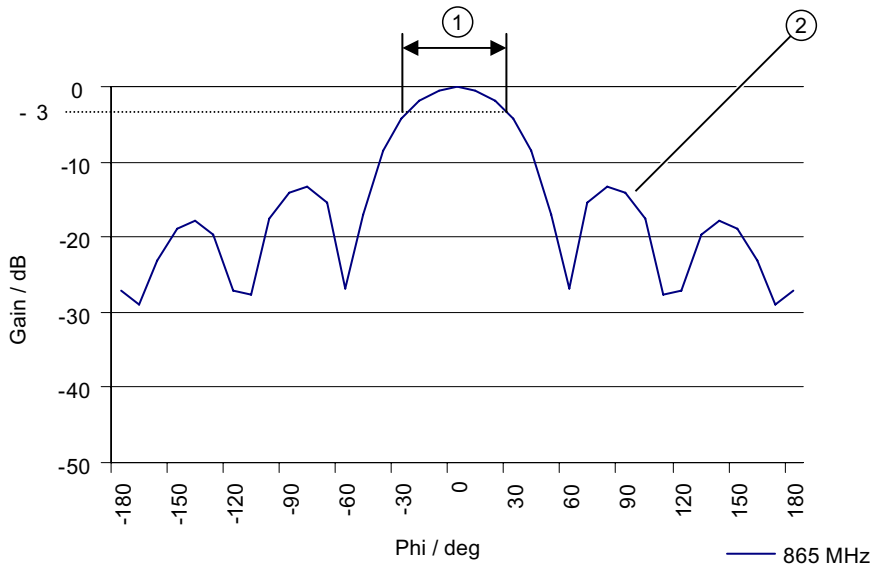

①	Beam width
②	Spurious lobe

Specifications

Selection of the beam angle within the approval directives also has effects on the field of application, since a larger beam angle allows a larger area to be covered by RFID transponders. The following graphic clarifies the cross-section of the beam cone with the covered area.

Beam angle: cross-section of the beam cone with the covered area

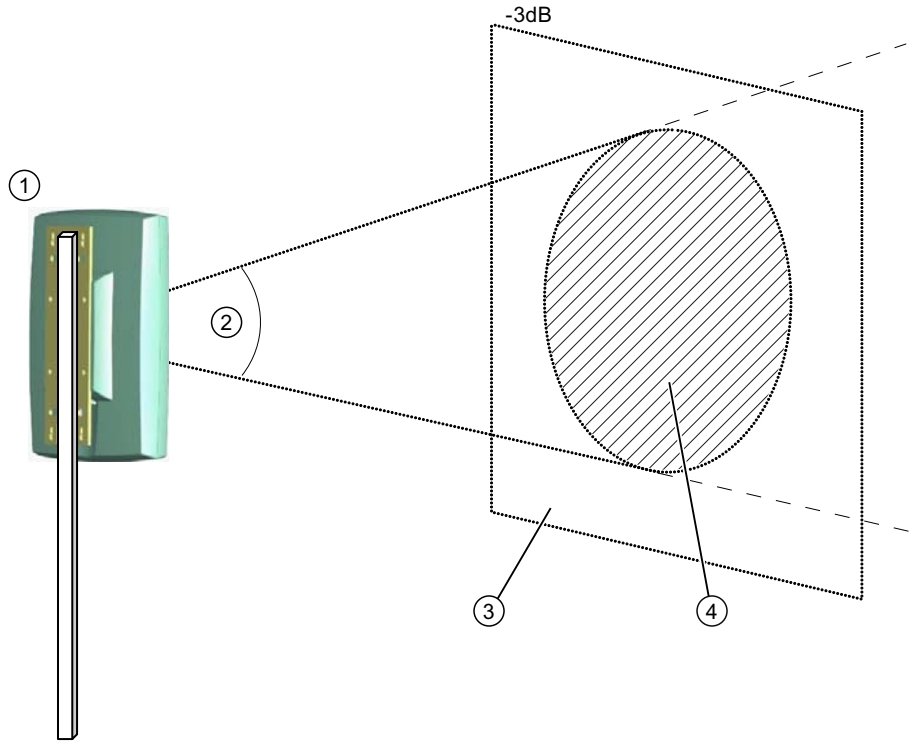

①	Third-party antenna
②	Beam angle
③	Covered area
④	Activation or reading range

The reading range depends on the horizontal and vertical beam widths in the case of equal distances from the transmitter antenna. Depending on the mechanical mounting and the ratio between the vertical beam width ① and the horizontal beam width ②, read areas result as shown in the following graphic:

Read area depending on the beam width

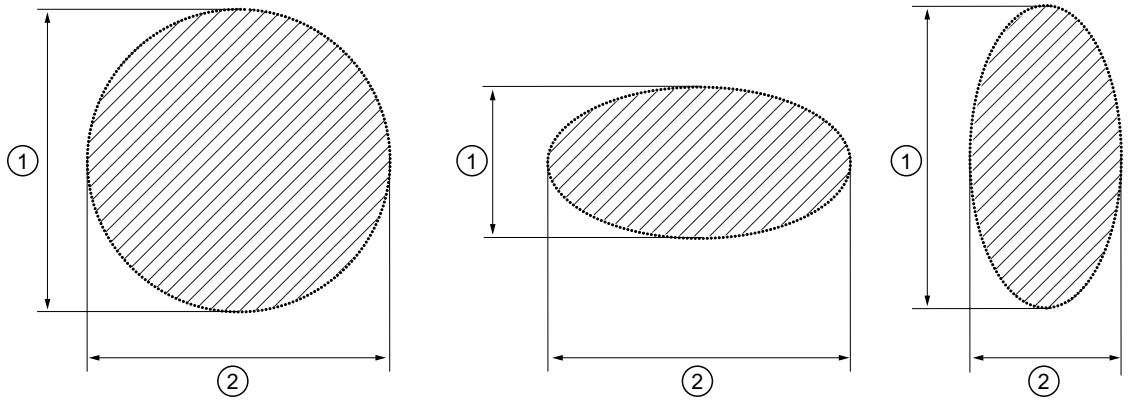

①	Vertical beam width
②	Horizontal beam width

6.2.5 Antenna cables

6.2.5.1 Selection criteria

You must observe the criteria listed below when selecting the appropriate antenna cable for your third-party antenna.

Characteristic impedance

Definition

If the input impedance of a device does not agree with the cable impedance, reflections occur which reduce the power transmission and can result in the appearance of resonance and thus to a non-linear frequency response.

Specifications

- You must only use coaxial antenna cables when connecting a third-party antenna.
- This antenna cable must have a nominal characteristic impedance of Z = 50 Ohm.

Antenna cable loss

In order to be able to transmit the available UHF power from the SIMATIC RF660R reader to the antenna(s), the antenna cable loss must not exceed a value of approx. 4 dB.

Dependency of the cable loss

The cable loss depends on two important factors:

- External characteristics of cable. These includes the cable length, diameter and design.
- As a result of the physical principle, the cable loss is also frequency-dependent, i.e. the cable loss increases at higher transmitter frequencies. Therefore the cable loss must be specified in the frequency band from 860 to 960 MHz.

Cable vendors usually provide tables or calculation aids for their types of cable which usually include the transmitter and receiver frequencies as well as the cable length. Therefore contact your cable vendor in order to determine the appropriate type of cable using the approximate value referred to above.

6.2.5.2 Notes on use

Shielding of the antenna cable

Coaxial antenna cables always have a shielded design and therefore radiate little of the transmitted power to the environment.

Note

Cable with double shielding

You should therefore preferentially select cable with double shielding since this provides the best damping.

Bending radius of the antenna cable

The properties of the cable shield are influenced by mechanical loading or bending. You must therefore observe the static and dynamic bending radii specified by the cable vendor.

Connectors and adapters

You must use connectors and adapters of type "Reverse Polarity R-TNC" (male connector) for your antenna cables from a third-party supplier in order to guarantee correct connection to the SIMATIC RF660R reader.

The figure below shows the standard for a suitable thread:

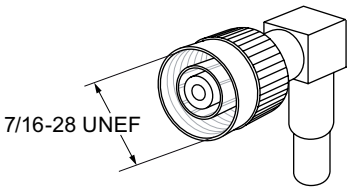

You can find more information in the catalog data of your cable vendor.

6.2.6 Parameterization

6.2.6.1 Setting of parameters in the SIMATIC RF660R configuration software

The transmitted power of the SIMATIC RF660R reader can be automatically set and calculated using the configuration software with the data of the parameters mentioned above.

Procedure

1. Select the "Edit Antenna Settings" screen form.

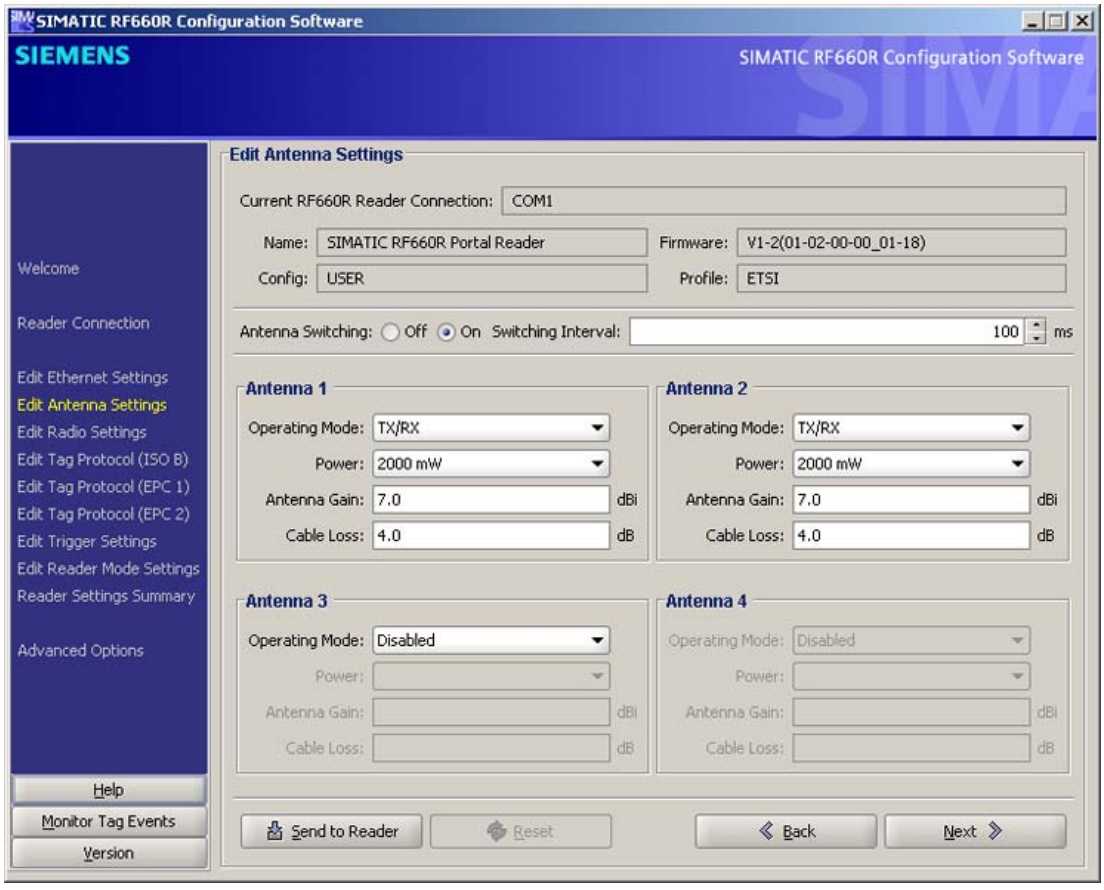

2. Enter the following parameters in the screen form.

Parameter name	Description
Operating mode	• Only Tx • Only Rx • Tx/Rx Using the drop-down list "Operating mode", you can select whether the antenna is to only transmit (Tx), only receive (Rx) or alternately send and receive (Tx/Rx).
Power	The maximum radiated power is defined through selection of the corresponding country and radio profile in the welcome screen form. The radiated power can be reduced if necessary.
Antenna gain	The antenna gain must be entered referred to the isotropic radiator (specified in "dBi"). • Software version 1.18 does not permit values < 4.0 dBi to be entered. Only a configuration using XML commands is possible in this case. See Section .
Cable loss	Enter the cable loss as described in Section Antenna cable loss (Page 166) . If you enter a value < 1 dB, the value is automatically reset to a realistic value.

1. Upload the configured values to the reader by clicking the "Send to reader" button.

6.2.7 Application example

This section contains an example with specific values. Using this example it is possible to understand how the complete selection procedure for antennas, cables, and adapters as well as the settings could be carried out on an RF600 system reader.

In the example it is assumed that you wish to use your SIMATIC RF600 system with your third-party components in Germany (ETSI EN 302 208 V1.2.1).

Procedure

1. Compare the technical specifications of your antenna with the values required by the SIMATIC RF600 system.

Values	Example antenna	Required values	OK?
Frequency band	865 to 870 MHz	865 to 868 MHz	OK
Impedance	50 Ohm	50 Ohm	OK
VSWR	<1.5	<1.24	Not OK
Polarization	Circular, right		OK
Antenna gain	8.5 dBi	>6 dBi	OK
Beam width horizontal/vertical	63°	≤70°	OK
Front-to-back ratio	-18 dB	≥10 dB	OK
Spurious lobe suppression	-16 dB	≥10 dB	OK
Axial ratio	2 dB	≤3 dB	OK
Maximum power	6 W	≥4 W	OK

Since the specific VSWR value of the antenna does not agree with the value required by the system, you must have this value checked. Therefore contact your antenna vendor or an EMC laboratory.

2. Compare the technical specifications of your cables and connectors with the values required by the system.
For example, you can use cables of type "LMR-195" from the company "TIMES MICROWAVE SYSTEMS". Suitable cables have e.g. an outer diameter of 5 mm. The company offers various designs of cables depending on the requirements. Numerous connectors are also available for their cables.

Values	Example cable	Required values	OK?
Cable attenuation	36.5 dB / 100 m at 900 MHz With an assumed length of 10 m, this results in a loss of 3.65 dB.	≤4 dB	OK
Impedance	50 Ohm	50 Ohm	OK

Values		Example connector	OK?
Type of plug on reader side	R-TNC socket	R-TNC plug	OK
Type of plug on antenna side	N socket	N plug	OK

3. Parameterize the following values depending on the used reader:
   - **Parameterize the RF660R via configuration software**
     Antenna gain: 8.5 dBi
     Cable loss: 4 dB (due to adaptation and damping losses of the connectors)
   - **Parameterize the RF660R via the XML command "antennaConfig"**
     In the XML command "antenneConfig", the following must be set for the antenna port that is used:
     (antenna number="1 ... 4"), antenna gain (gain="8.5") and cable loss (cableLoss="4.0").
     Cable loss: 4 dB (due to adaptation and damping losses of the connectors)
   - **Parameterizing RF630R via SIMATIC commands**
     Since according to ETSI EN 302 208 V1.2.1 the maximum permissible radiated power is 2 W ERP, none of the transmitting power settings available to the user (**distance_limiting**) can lead to the required maximum permissible radiated power value being exceeded. The exact radiated power of the reader, together with the antenna cables and antenna used, are the result of the value used in **distance_limiting** 0-F and the calculation given in Chapter "Radiated power setting with RF630R".
4. in the configuration software of the RF660R reader:
5. You must subsequently have your desired system requirements measured and verified according to EN 302 308 in an absorber chamber.
   You may only use your SIMATIC RF600 system with the new third-party components when this has been carried out.

7.1.3 Transponder classes and generations

The transponder classes are distinguished by the different communication protocols used between the reader and transponder. Transponder classes are mostly mutually incompatible.

The following transponder classes are supported by the RF 600 system:

- ISO 18000-6B with full ISO profile (RF660R, RF610M)
- EPC Global Class 1, Gen 1 with full EPC Global Profile (RF660R, RF610M)
- EPC Global Class 1 Gen 2 with full EPC Global Profile (ISO 18000-6C)

Support for protocol types using the RF600

Specification of the transponders/tags in accordance with ISO 18000-6 refers to implementation of the air-interface protocols.

There are three variants:

- ISO 18000-6A: Not supported
- ISO 18000-6B: Supported by RF660R
- ISO 18000-6C: Supported by RF660R, RF620R, RF630R
  This variant is identical with EPC Global Class 1 Gen 2 standard.

Table 7- 1 Comparison of the ISO 18000-6B and ISO 18000-6A protocol types

	Type B	Type A
Frequency band	860 to 960 MHz	860 to 960 MHz
Transmission procedure	Bi-phase modulation and Manchester encoding	Pulse Interval Encoding (PIE)
Anti-collision techniques	Adaptive binary tree technique	ALOHA technique
Protocol	Reader talks first	Reader talks first
Supported in RF600	By RF660R	No

EPC Global

EPC Class	Definition	Programming	Supported in RF600
Class 1	Passive tags with the following minimum features: • EPC ID (Electronic Product Code IDentifier) • Tag ID • A function which permanently ensures that tags no longer respond. • Optional use or suppression of tags • Optional password-protected access control • Optional USER memory area.	Programming by the customer (cannot be reprogrammed after locking)	Yes
Class 2	Passive tags with the following additional features (in comparison with Class 1 tags): • Extended tag ID, • Extended USER memory area • Authenticated ACCESS access • Additional features	Freely programmable	No
Class 3	Passive tags with the following additional features (in comparison with Class 2 tags): • Source of energy that supplies power to the tag or its sensors • Sensors with optional data logging		No
Class 4	Active tags with the following features: • EPC ID (Electronic Product Code IDentifier) • Extended tag ID • Authenticated ACCESS access • A source of energy • Communication using an autonomous transmitter • Optional USER memory area. • Optional sensors with or without optional data logging		No

Table 7- 2 Comparison of EPC Class 1 Gen 1 and Class 1 Gen 2

Property	Class 1 Gen 1	Class 1 Gen 2 = ISO 18000-6 C
Frequency	860-930 MHz	860-960 MHz
Memory capacity	64 or 96 bits	96-256 bits
Can be programmed on site	Yes	Yes
Programming	written once; read many times	Yes
Other characteristics	_	Reading is faster and more reliable than for Generation 1. Enhanced compliance with global standards.

7.1.4 Electronic Product Code (EPC)

The Electronic Product Code (EPC) supports the unique identification of objects (e.g. retail items, logistical items or transport containers). This makes extremely accurate identification possible. In practical use, the EPC is stored on a transponder (tag) and scanned by the reader.

There are different EPC number schemes with different data lengths. Below is the structure of a GID-96-bit code (EPC Global Tag Data Standards V1.1 Rev. 1.27) :

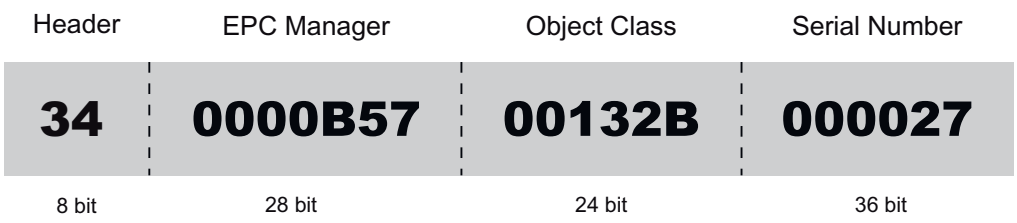

- **Header:** This identifies the EPC identification number that follows with regard to length, type, structure and version of the EPC
- **EPC manager:** This identifies the company/corporation
- **Object class**: Corresponds to the article number
- **Serial number:** Consecutive number of the article

The Siemens UHF transponders are all suitable for working with EPC and other number schemes. Before a transponder can work with a number scheme, the relevant numbers must first be written to the transponder.

Allocation of the ECP ID by the tag manufacturer

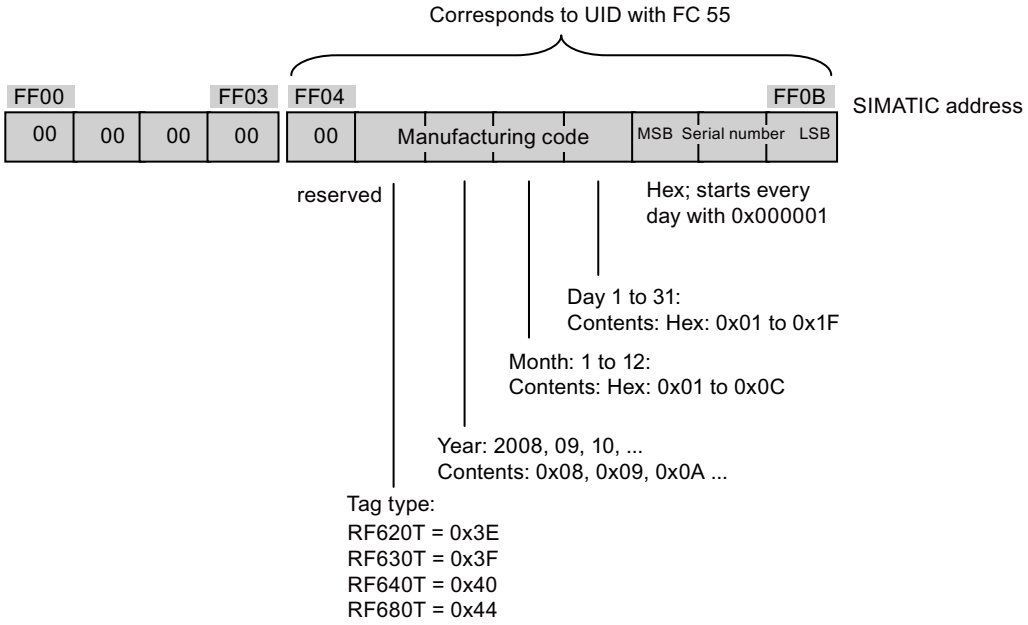

Figure 7-2 Allocation of the EPC ID on delivery of the tag

7.2 SIMATIC RF630L Smartlabel

7.2.1 Features

SIMATIC RF630L smart labels are passive, maintenance-free data carriers based on UHF Class 1 Gen2 technology that are used to store the "Electronic Product Code" (EPC).

Smart labels offer numerous possible uses for a wide range of applications and support efficient logistics throughout the process chain.

	SIMATIC RF630L transponder			
	6GT2810-2AB00	6GT2810-2AB01	6GT2810-2AB02	6GT2810-2AB03
Design				
Area of application	Simple identification such as barcode replacement or supplementation, through warehouse and distribution logistics, right up to product identification.			
Memory	EPC 96 bits			
Write range	0.2 m to 5 m			0.2 m to 5 m
Reading range	0.2 m to 8 m			0.2 m to 5 m
Mounting	Self-adhesive **paper labels** for attaching to packaging units, paper or cartons, for example.		Self-adhesive **plastic labels** for attaching to packaging units, paper or cartons, for example.	
	Not suitable for fixing straight onto metal or onto liquid containers			

7.2.2 Minimum spacing between labels

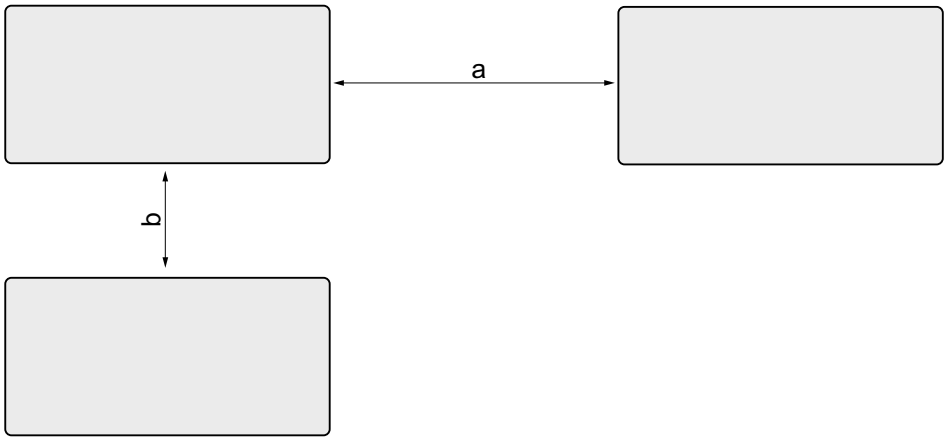

Figure 7-3 Minimum spacing between labels

Table 7- 3 Minimum spacing

Minimum spacing	6GT2810-2AB00	6GT2810-2AB01	6GT2810-2AB02	6GT2810-2AB03
a	50 mm			
b	50 mm			

Please note that smart labels can also be attached one above the other. The spacing between the labels attached one above the other depends on the damping characteristics of the carrier material.

7.2.3 Memory configuration for smart labels with MLFBs -00, -01, -02

Note

Validity of the memory configuration

Please note that the following memory configuration only applies to smart labels with the following MLFBs:

- 6GT2810-2AB00
- 6GT2810-2AB01
- 6GT2810-2AB02

Memory banks

The memory is divided logically into three different memory banks:

Memory bank (decimal)	Memory type	Description
MemBank 10_2	TID	Is defined by the manufacturer, contains the class identifier of a tag.
MemBank 01_2	EPC	Contains the EPC UID, the protocol and the CRC of a tag You can write to the EPC memory area. In the delivery condition, the memory contents can have the following states: • empty • containing the same data • containing different data
MemBank 00_2	RESERVED	Contains the access and kill password.

The graphic below illustrates the exact memory utilization: Each box in the right part of the graphic represents one word (16 bit) in the memory.

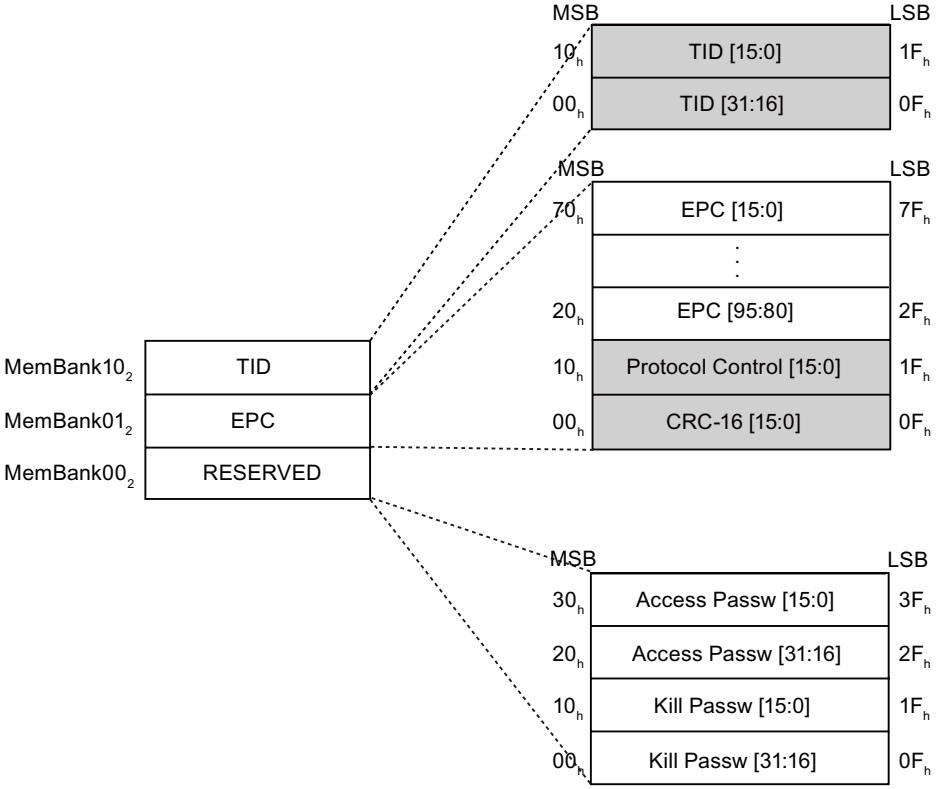

Color	Access by SIMATIC RF660R / SIMATIC RF610M
	Read
	Write / read

Reading the memory bit

The EPC ID is automatically read during the sensing cycle of the stationary or mobile reader. (see "SIMATIC RF660R Parameterization Manual", Section "EPC Class 1 GEN 2 protocol settings" or "SIMATIC RF610M Operating Instructions").
In addition, the TID, the EPC ID, the protocol command bits, the CRC-16 bits, the access password and the kill password can be read using the "tagDataRead" XML command. (see "SIMATIC RF660R Function Manual", Section "Smart reader tag data reading" and Section "FCC channel ID settings").

Reserved memory bank: programming or modifying memory areas

The memory areas of the reserved memory bank can be programmed using the SIMATIC RF660R reader:

- Using the "tagDataWrite" XML command (see "SIMATIC RF660R Function Manual", Section "Smart reader tag data writing")

Alternatively, the memory areas of the reserved memory bank can be modified using the mobile RF610M reader:

- Using the "Write" function in the data editor (see "SIMATIC RF610M Operating Instructions", Section "Write tag")

EPC memory bank: programming or modifying EPC ID

The memory area "Protocol Control Bit" is defined by the manufacturer and should not be changed by the user.

The EPC ID can be programmed using the SIMATIC RF660R reader:

- Using the "tagProgramID" XML command (see "SIMATIC RF660R Function Manual", Section "Smart reader tag ID programming")

Alternatively, the EPC ID can be modified using the mobile RF610M reader:

- Using the "Write ID" function (see "SIMATIC RF610M" Operating Instructions, Section "Write ID"

7.2.4 Memory configuration for smart labels with MLFB -03

Note

Validity of the memory configuration

Please note that the following memory configuration only applies to smart labels with the following MLFB:

- 6GT2810-2AB03

Memory representation according to EPC

The memory of the ISO 18000-6C G2XM chip is logically divided into four different memory banks:

Memory bank (decimal)	Memory type	Description
MemBank 11_2	USER	User-writable USER memory area
MemBank 10_2	TID	Is defined by the manufacturer, contains the class identifier and serial number of a tag
MemBank 01_2	EPC	Contains the EPC data, the protocol information and the CRC data of a tag. You can write to the EPC memory area. In the delivery condition, the memory contents can have the following states: • containing the same data • containing different data
MemBank 00_2	RESERVED	Contains the access password.

The graphic below illustrates the exact memory utilization: Each box in the right part of the graphic represents one word (16 bit) in the memory.

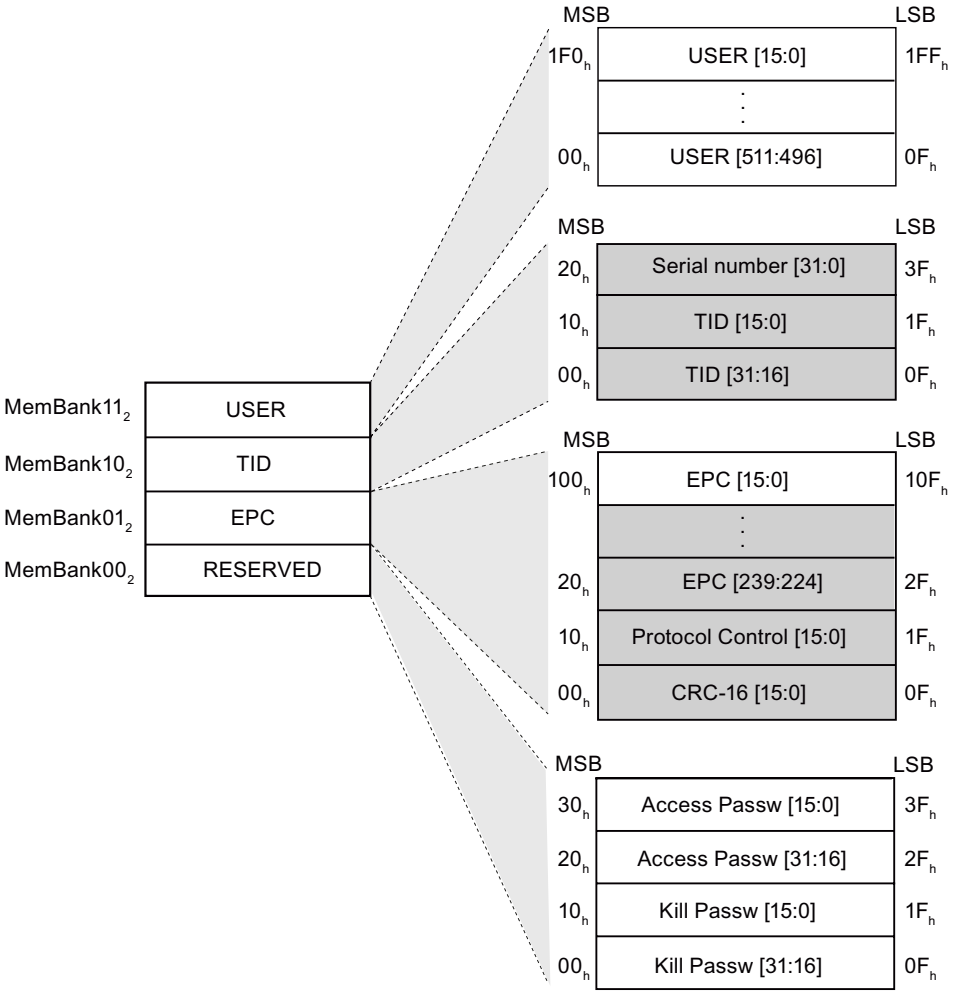

Figure 7-4 Representation of the RF630L memory configuration according to EPC (logical memory map)

7.2.5 Ordering data

RF630L transponder	Order No.	Type of delivery
RF630L transponder, smart label 101.6 mm x 152.4 mm (4" x 6")	6GT2810-2AB00	Minimum order amount 1600 items (800 on one roll)
RF630L transponder, smart label 101.6 mm x 50.8 mm (4" x 2")	6GT2810-2AB01	Minimum order amount 1000 items (1000 on one roll)
RF630L transponder, smart label 97 mm x 27 mm	6GT2810-2AB02	Minimum order amount 2000 items (2000 on one roll)
RF630L transponder, smart label 54 mm x 34 mm	6GT2810-2AB03	Minimum order amount 2000 items (2000 on one roll)

7.2.6 Technical data

Table 7- 4 Mechanical data

	6GT2810-2AB00	6GT2810-2AB01	6GT2810-2AB02	6GT2810-2AB03
Dimensions (L x W)	101.6 mm x 152.4 mm (ca. 4" x 6")	101.6 mm x 50.8 mm (ca. 4" x 2")	97 mm x 27 mm	54 mm x 34 mm
Design	Paper with integrated antenna		Plastic with integrated antenna	
Label type	Paper label		Inlay	
Antenna material	Aluminum			
Static pressure	10 N/mm^2			
Material surface	Paper		Plastic PET	
Type of antenna	Shortened dipole			
Color	white		Transparent	
Printing	Can be printed using heat transfer technique		Printed using heat transfer technique (currently only with Toshiba B-SX4T)	Cannot be printed
Mounting	Single-sided adhesive (self-adhesive label).		Single-sided adhesive (self-adhesive inlay).	
Degree of protection	None, the label must be protected against humidity		IP65	
Weight	Approx. 3 g	Approx. 2 g	Approx. 1 g	

Table 7- 5 Electrical data

	6GT2810-2AB00	6GT2810-2AB01	6GT2810-2AB02	6GT2810-2AB03
Air interface	ISO 18 000-6 Type C			
Polarization type	Linear			
Polarization direction	The polarization direction is parallel with the short side of the paper label	The polarization direction is parallel with the long side of the paper label	The polarization direction is parallel with the long side of the inlay	
Frequency range	Europe 865 … 868 MHz			
	USA 902 … 928 MHz			
Typical read distance				
• Paper/cardboard	• 0.2 m to 8 m			• 0.2 m to 5 m
• Plastic film	• 0.2 m to 8 m			• 0.2 m to 5 m
• Plastic (boxes, surface resistance > 10 MΩ	• 0.2 m to 4 m			• 0.2 m to 3 m
• Wood (dry, < 30 % residual humidity)	• 0.2 m to 4 m			• 0.2 m to 3 m
• Glass	• 0.2 m to 4 m			• 0.2 m to 3 m
Typical write distance				
• Paper/cardboard	• 0.2 m to 5 m			• 0.2 m to 3 m
• Plastic film	• 0.2 m to 5 m			• 0.2 m to 3 m
• Plastic (boxes, surface resistance > 10 MΩ	• 0.2 m to 2.5 m			• 0.2 m to 1 m
• Wood (dry, < 30 % residual humidity)	• 0.2 m to 2.5 m			• 0.2 m to 1 m
• Glass	• 0.2 m to 2.5 m			• 0.2 m to 1 m
Minimum spacing between labels				
• tile	• 50 mm			
• cascade	• 100 mm			
Energy source	Magnetic energy via antenna, without battery			
Multi-tag capability	Yes			

Table 7- 6 Memory specifications

	6GT2810-2AB00	6GT2810-2AB01	6GT2810-2AB02	6GT2810-2AB03
Type	EPC Class 1 Gen2			
Memory organization	EPC code 96 bit			96 bits/240 bits
Additional user memory	No			64 bytes
Listing	ISO 18000-6C			
Data retention at +25 °C	10 years			
Read cycles	Unlimited			
Write cycles	100,000			
Anti collision	Approx. 100 labels/sec.			

Table 7- 7 Environmental conditions

	6GT2810-2AB00	6GT2810-2AB01	6GT2810-2AB02	6GT2810-2AB03
Temperature range during operation	-40 °C … 65 °C, up to 80 °C (200 cycles)			
Temperature range during storage	The label should be stored in the range of +15°C and +25°C at a humidity of 40% to 60%.			
Storage duration	Two years, determined by the shelf life of the adhesive			
Torsion and bending load	Partially permissible			
Distance from metal	Not suitable for fixing straight onto metal			

Table 7- 8 Identification

	6GT2810-2AB00	6GT2810-2AB01	6GT2810-2AB02	6GT2810-2AB03
CE	CE approval to R&TTE			
FCC	Passive labels or transponders comply with the valid regulations; certification is not required			

7.2.7 Dimension drawings

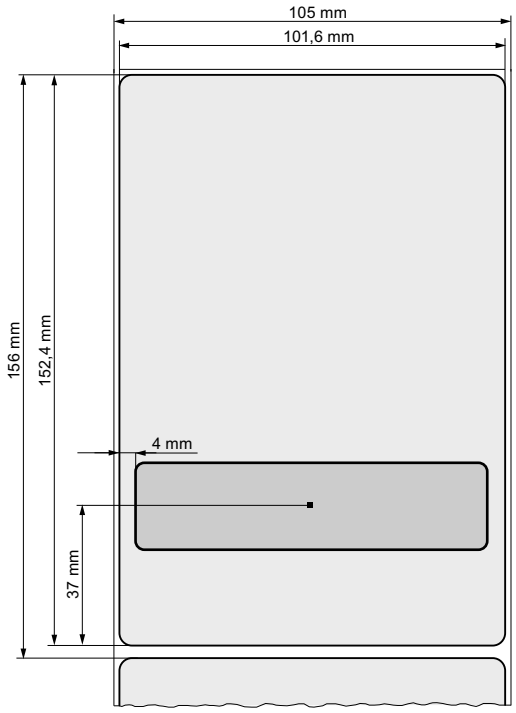

Figure 7-5 SIMATIC RF630L 6GT2810-2AB00 dimension drawing

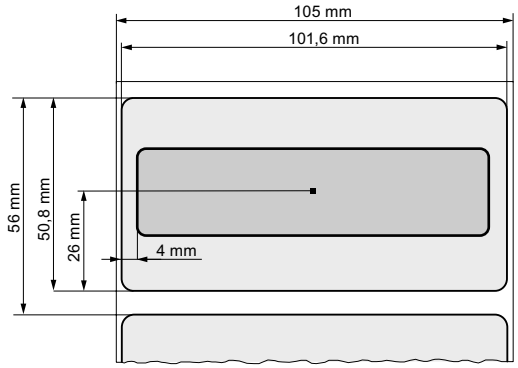

Figure 7-6 SIMATIC RF630L 6GT2810-2AB01 dimension drawing

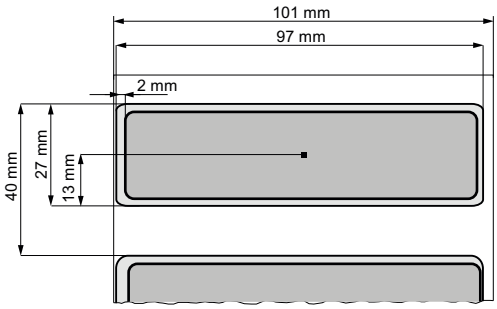

Figure 7-7 SIMATIC RF630L 6GT2810-2AB02 dimension drawing

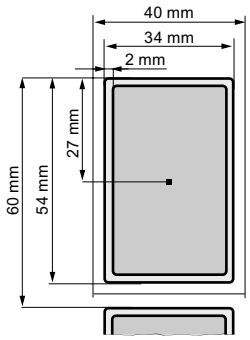

Figure 7-8 SIMATIC RF630L 6GT2810-2AB03 dimension drawing

7.3 SIMATIC RF620T

7.3.1 Characteristics

The SIMATIC RF620T Transponder is passive and maintenance-free, based on the UHF Class 1 Gen2 technology for storing 96-bit electronic product codes (EPC)

The container tag for industrial applications is rugged and highly resistant to detergents. It is designed for easy attachment onto plastic, wood, glass, e.g. containers, palettes, and trolleys

The optimum functionality/range of the RF620T on metal is achieved by means of the spacer.

Since the plastic is food safe, it is also suitable for use in the food-processing industry.

This container tag is designed for the frequency ranges 868 MHz (Europe) and 915 MHz (USA) and can be operated in combination with our UHF system RF660.

SIMATIC RF620T Transponder	Characteristics		
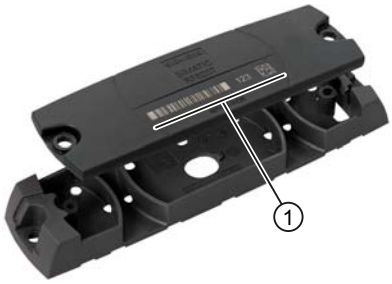	Area of application	Transponder for rugged, industrial requirements such as RF identification in warehouses and the logistics and transport area.	
	Frequency versions	Europe	USA / Canada
		868 MHz	915 MHz
	Polarization	Linear	
	Memory	EPC 96 bit	
	Read/write range • with non-metallic carriers • direct on metallic carriers • with spacer on metallic carriers	• typically 0.2 to 6 m • • typically 0.2 to 2 m • • typically 0.2 to 4 m	
	Mounting	• screw, bond • on metal by means of spacers	
	① Labeling area	You can inscribe the transponder itself using laser, or adhere a label to position ①. Possible types of labeling: • Barcode • Inscription in plain text • Data matrix code	
	Housing color	Anthracite	

7.3.2 Ordering data

Ordering data	Order No.
SIMATIC RF620T • Frequency 865 MHz to 928 MHz, • UHF Class 1 Gen2 technology (96 bit) • -25 °C to +80 °C operating temperature • Dimensions (L x W x H) 127 x 38 x 6 mm • IP 67 degree of protection	6GT2810-2HC80
Spacer for SIMATIC RF620T • For attaching to metal surfaces • Dimensions (L x W x H) 155 x 38 x 12 mm	6GT2898-2AA00

7.3.3 Planning the use

7.3.3.1 Reading range when mounted on non-metallic carriers

The transponder is generally designed for mounting on metallic objects which provide the conditions for the maximum reading ranges

Table 7- 9 Reading range on non-metallic carriers

Carrier plate material	Reading range
Transponder on wooden carrier (dry, degree of moisture < 15%)	typ. 6 m
Transponder on plastic carrier	typ. 6 m
Transponder on glass	typ. 6 m
Transponder on plastic mineral water bottle	typ. 1.2 m

100% reading range is achieved when mounted in empty, anechoic rooms.

7.3.3.2 Directional radio pattern of the transponder on non-metallic surfaces

Preferably, align the data carrier parallel to the transmitting antenna. If, however, the data carrier including the metallic carrier plate is tilted, the reading range will be reduced.

Rotation about the polarization axis

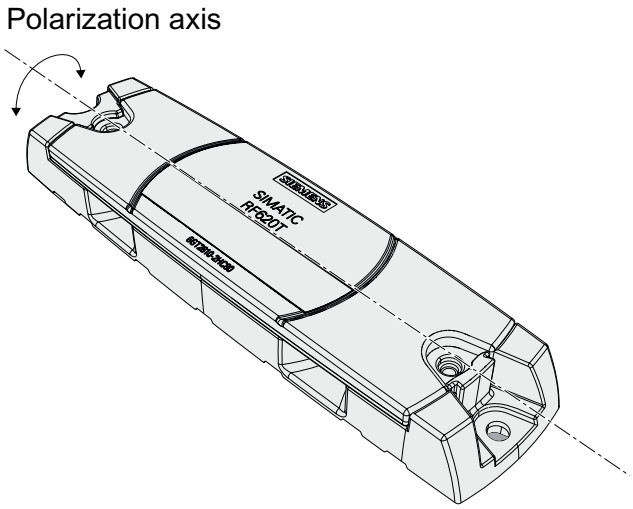

Figure 7-9 Rotation of the transponder about the polarization axis

Generally the range does not change when the transponder without carrier material is rotated about the polarization axis.

Rotation orthogonal to the polarization axis

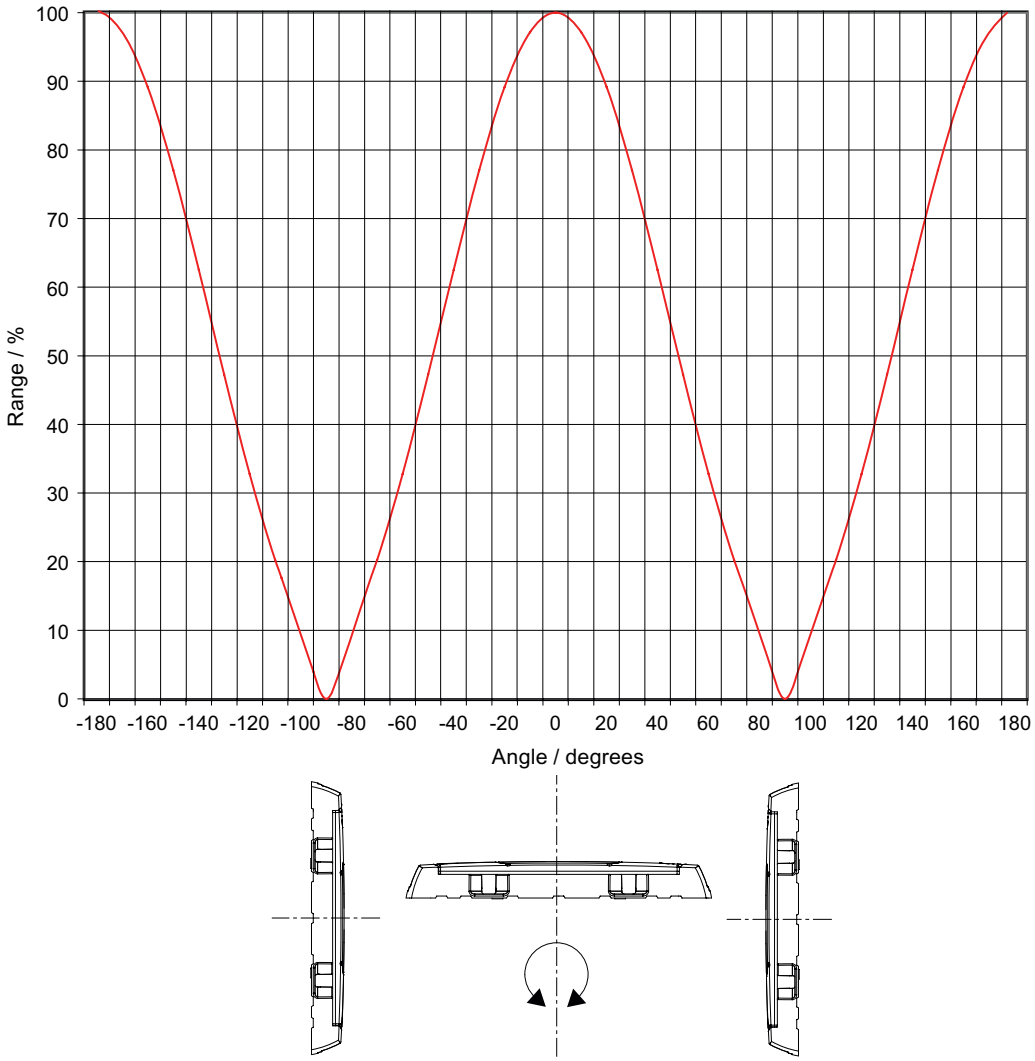

Figure 7-10 Transponder characteristics when rotated orthogonally to the polarization axis (within the tag plane)

If the transponder is positioned orthogonally to the transmitting antenna, it normally cannot be read. Therefore the data carrier is preferably to be aligned parallel to the transmitting antenna. The following figure illustrates this situation.

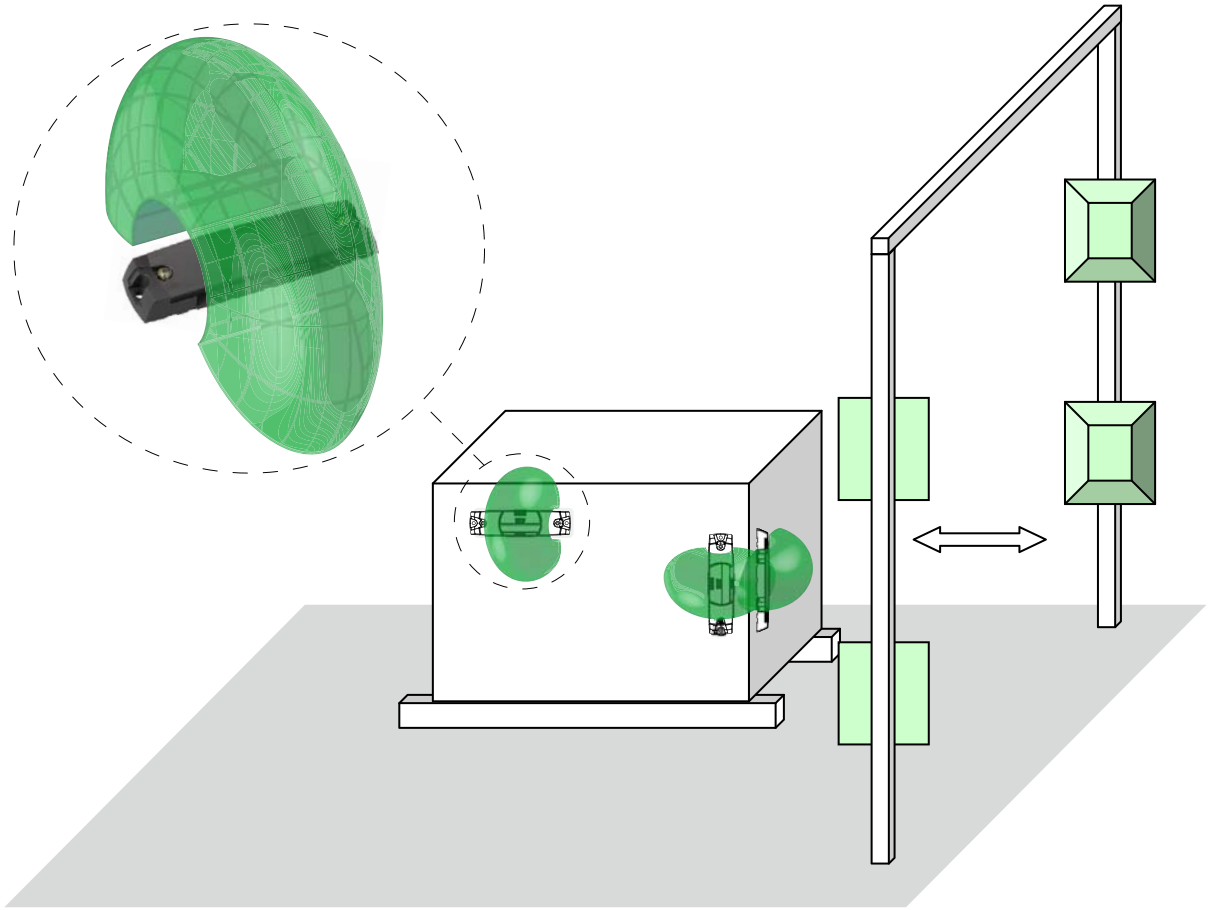

Figure 7-11 Application example for possible orientations of the transponder.

7.3.3.3 Optimum antenna/transponder positioning with plane mounting of the transponder on metal

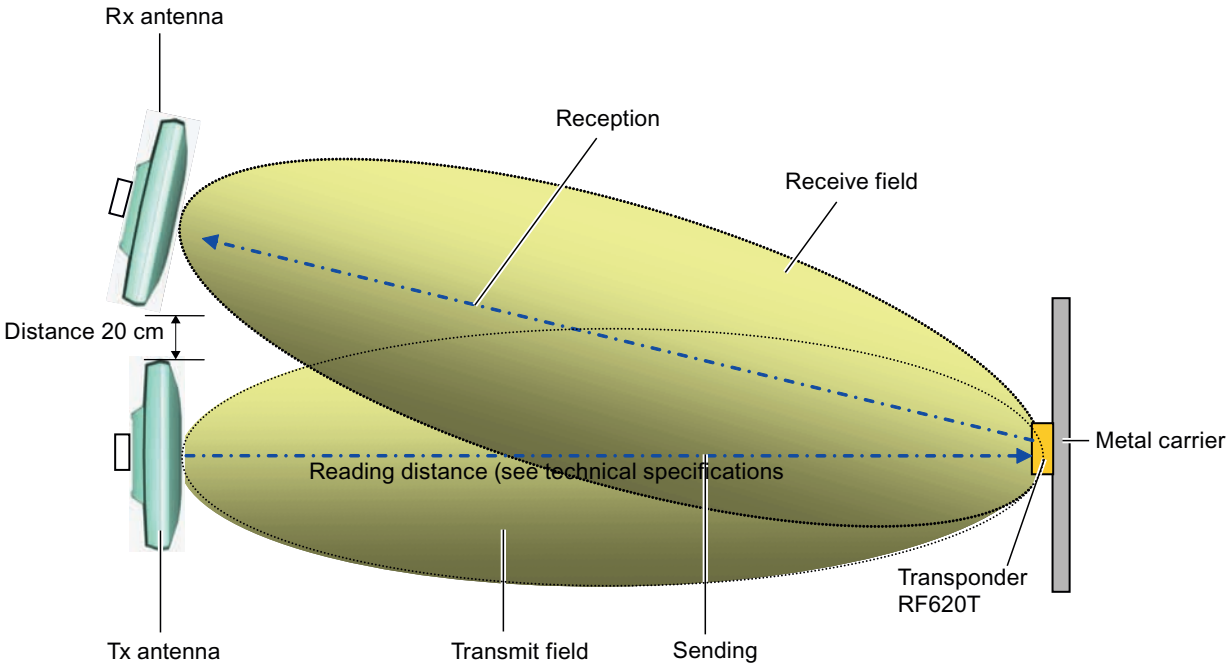

Figure 7-12 Example of optimum antenna/transponder positioning

7.3.3.4 Reading range on flat metallic carrier plates

The transponder generally has linear polarization. The polarization axis runs as shown in the diagram below. If the tag is centrically mounted on a flat metal plate, which may either be almost square or circular, it can be aligned in any direction since the transmitting and receiving RF660A antennas operate with circular polarization.

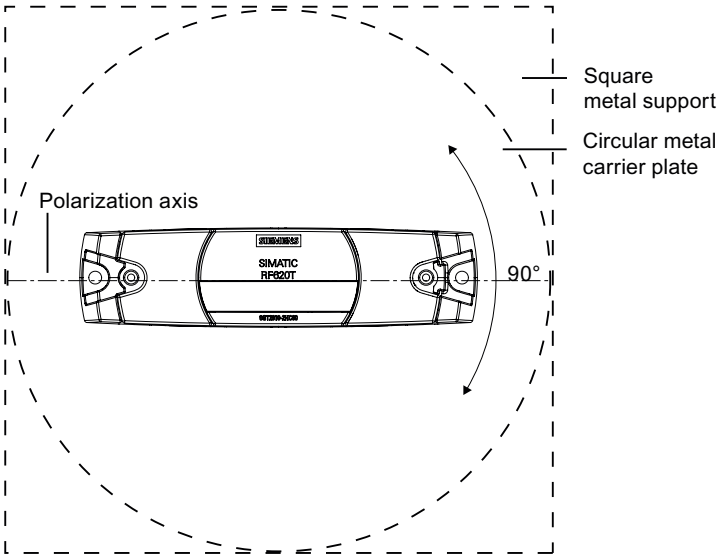

Figure 7-13 Optimum positioning of the transponder on a (square or circular) metal carrier plate

Table 7- 10 Reading range with metallic, plane carriers without spacer

Carrier plate material	Reading range Europe	Reading range USA
Metal plate at least 300 x 300 mm	typ. 2 m	typ. 1.5 m
Metal plate 150 x 150 mm	typ. 1.5 m	typ. 1 m

Table 7- 11 Reading range with metallic, plane carriers with spacer

Carrier plate material	Reading range Europe	Reading range USA
Metal plate at least 300 x 300 mm	typ. 4 m	typ. 6 m
Metal plate 150 x 150 mm	typ. 2 m	typ. 4.5 m

The use of spacers on metallic surfaces is therefore recommended.

On rectangular carrier plates, the reading distance depends on the mounting orientation of the transponder A 90° rotation of the transponder about the axis of symmetry may result in greater reading distances

7.3.3.5 Influence of conducting walls on the reading range

If there are conducting walls or restrictions in the vicinity that could shade the radio field, a distance of approx. 10 cm is recommended between the transponder and the wall In principle, walls have least influence if the polarization axis is orthogonal to the conducting wall. A spacer must be used in any case.

Reading range: One conducting wall

Dependence of the reading distance when positioned orthogonally to the conducting wall

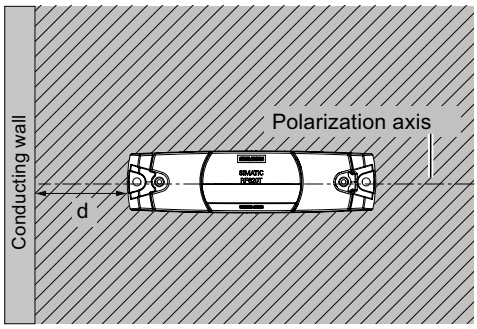

Top view

Distance d	20 mm	50 mm	100 mm	
Reading range	Approx. 100%	Approx. 100%	Approx. 100%	Wall height 20 mm
	Approx. 100%	Approx. 100%	Approx. 100%	Wall height 50 mm
	Approx. 80%	Approx. 100%	Approx. 100%	Wall height 100 mm

Dependence of the reading distance when positioned parallel to the conducting wall

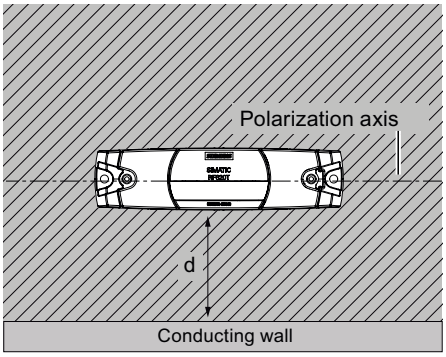

Top view

Distance d	20 mm	50 mm	100 mm	
Reading range	Approx. 70 %	Approx. 100%	Approx. 100%	Wall height 20 mm
	Approx. 60 %	Approx. 90 %	Approx. 100%	Wall height 50 mm
	Approx. 30 %	Approx. 70 %	Approx. 100%	Wall height 100 mm

Reading range: Two conducting walls

Influence on reading range when positioned against two conducting walls

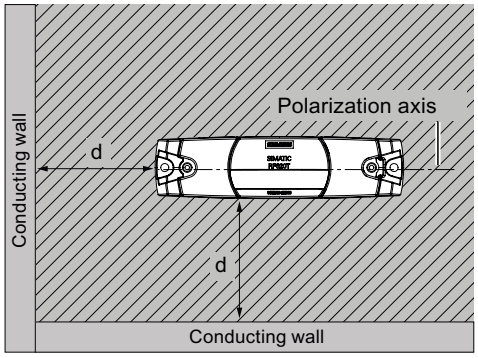

Top view

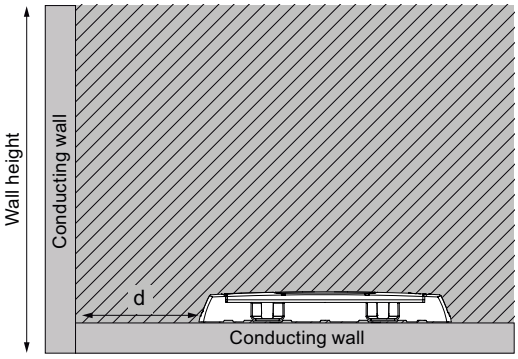

Side view

Distance d	20 mm	50 mm	100 mm	
Reading range	Approx. 70 %	Approx. 100%	Approx. 100%	Wall height 20 mm
	Approx. 60 %	Approx. 90 %	Approx. 100%	Wall height 50 mm
	Approx. 30 %	Approx. 70 %	Approx. 100%	Wall height 100 mm

The values specified in the tables above are reference values.

7.3.3.6 Directional radio pattern of the transponder on metallic surfaces

Preferably, align the data carrier parallel to the transmitting antenna. If, however, the data carrier including the metallic carrier plate is tilted, the reading range will be reduced.

Rotation about the polarization axis or orthogonal to the polarization axis

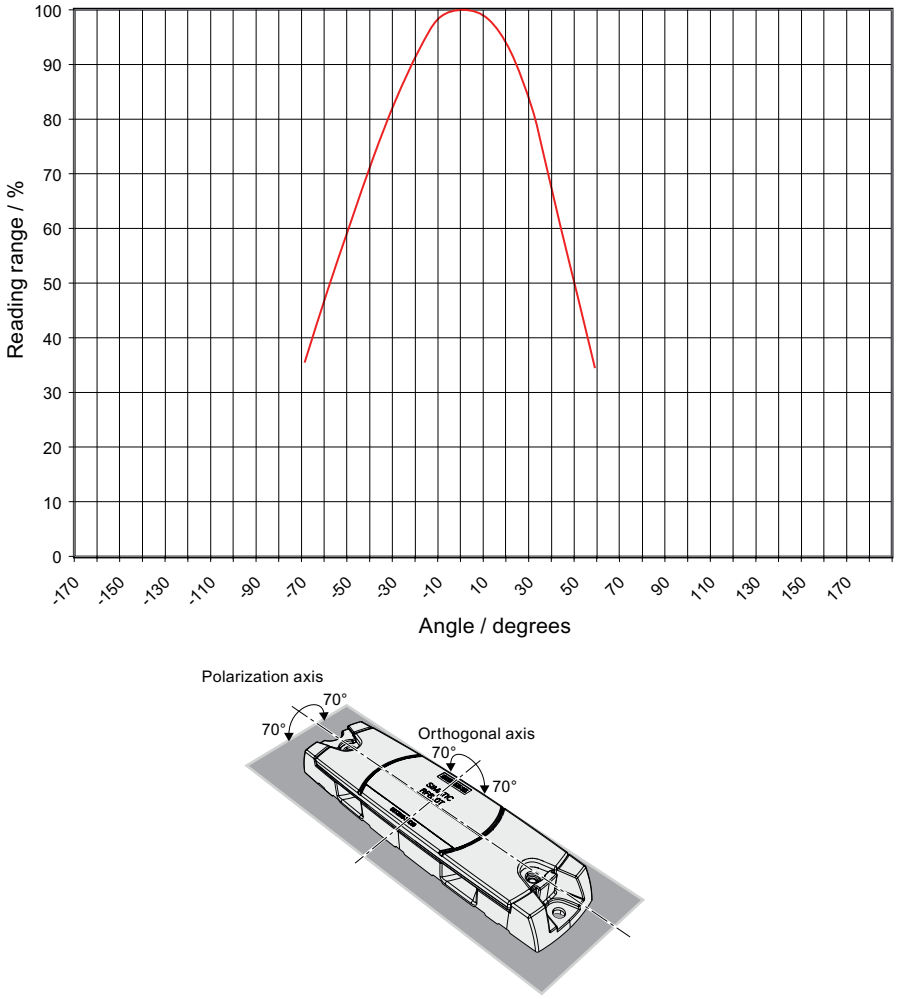

Figure 7-14 Characteristic of the transponder when rotated about the polarization axis or orthogonally to the polarization axis

7.3.3.7 Reading range when mounted on ESD carrier materials

The transponder is generally designed for mounting on non-conductive objects which provide the conditions for the maximum reading ranges The conductive or deflecting surface of ESD materials limits the reading range depending on the surface resistance. Generally, deflecting materials with a surface resistance of 1 x 10^5 to 1 x 10^{11} ohm and conductive materials with 1 x 10^3 to 1 x 10^5 ohm are available.

Table 7- 12 Limited reading range with ESD materials

Carrier plate material	Reading range
Transponder on electrostatic deflecting materials, dimensions 60 x 40 cm (surface resistance 2 x 10^9 ohm)	Approx. 4 m
Transponder on electrostatic conductive materials, dimensions 60 x 40 cm (surface resistance 1 x 10^4 ohm) Use of spacers	Approx. 1 m Approx. 2 m

100% reading range is achieved when mounted in empty, anechoic rooms. With multi-tag capability, limitations may result in the reading range.

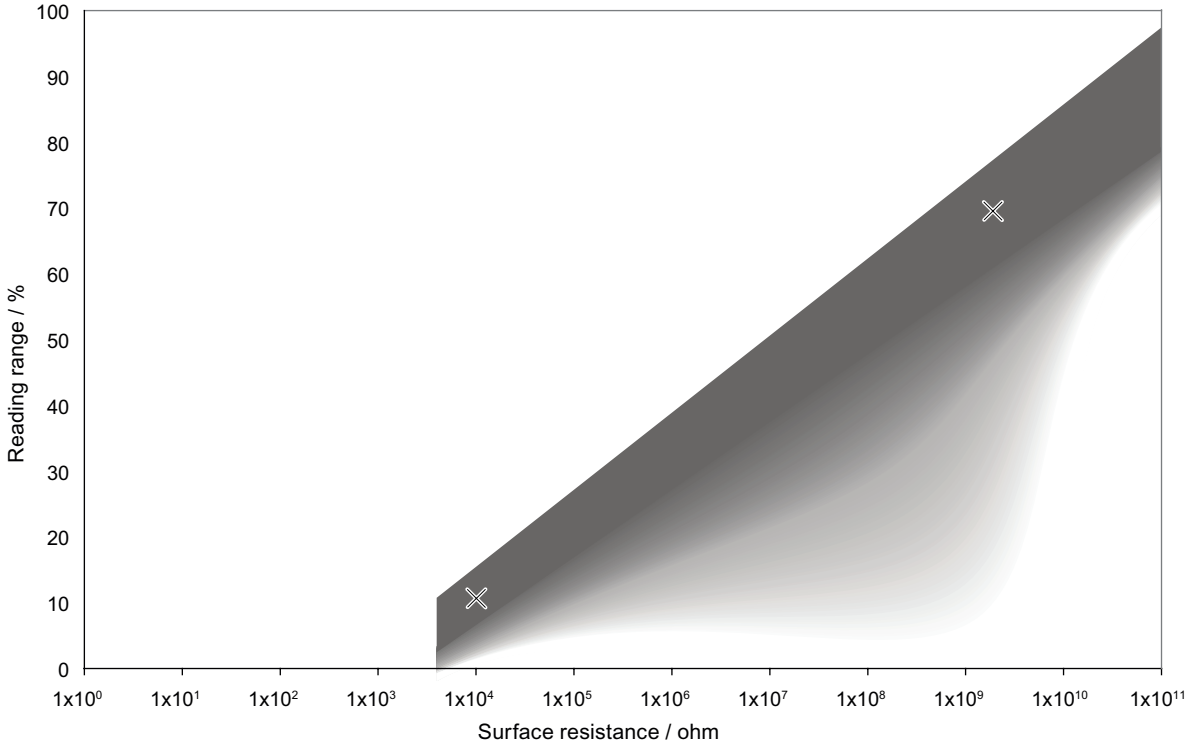

Figure 7-15 Schematic representation of how the reading range depends on the surface resistance of the ESD material

In the representation above, the two reading points with regard to the dependence of the reading range in % on the surface resistance are shown At the same time a linear dependence between the reading points is to be expected, however with measurement inaccuracies. The darker the hatching, the greater the probability that the reading point is found in the hatched area.

7.3.3.8 Communication with multiple transponders

The RF600 system is multitag-capable. This means that the reader can detect and write to several transponders almost simultaneously. The minimum distance between the transponders is ≥ 50 mm.

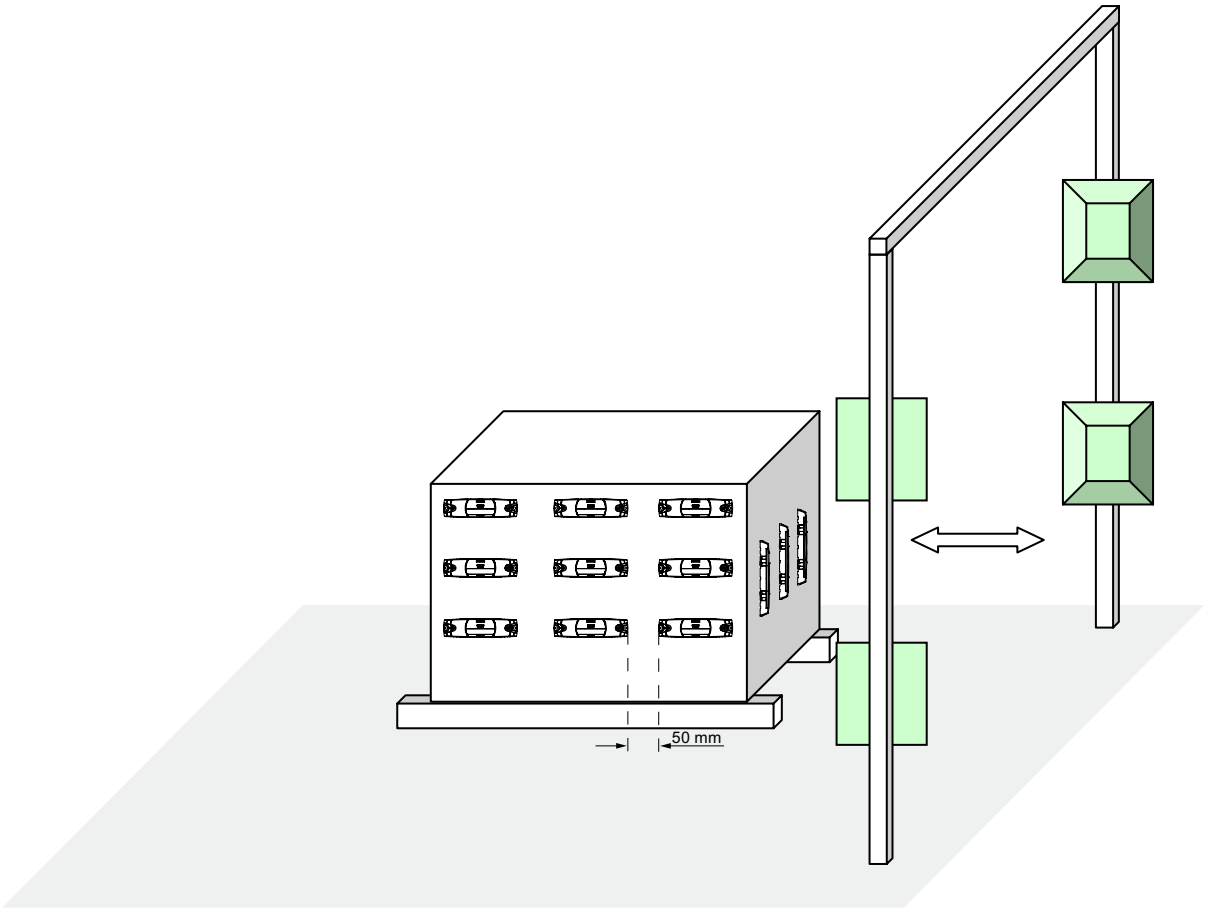

Figure 7-16 Multitag reading

7.3.4 Mounting instructions

CAUTION
Level mounting Please note that both the transponder and the spacer must be mounted on a level surface.

CAUTION
The screw fixing element was tested with the types of screws, spring washers and plain washers indicated below. Depending on the application area, the user must use similar, correspondingly certified screws, spring washers and plain washers (e.g. for the food processing industry).

EJOT screws can be additionally etched and passivated in some areas of the food processing industry, e.g if they made of stainless steel A2. In other areas without special requirements, the screws can be, for example, zinc plated and blue passivated.

Note

In case of high mechanical loads (such as shocks or vibration), the transponder must be fixed onto the spacer by means of screws.

Properties		Description	Graphics
Mounting type	• Transponder	• Screw mounting (e.g. 2 x M4 hexagon socket head cap screws ISO 4762, spring locket and grommet ISO 7092) or glued	
	• Transponder on spacer	• Clips or screw on the side of the clip, or 2 screws (e.g. z.B. EJOT PT ® 5411 35x10 VZ crosshead screw/torx)	
	• Spacer	• Screw mounting (e.g. 2 x M4 hexagon socket head cap screws ISO 4762, spring locket and grommet ISO 7092X) or glued or secured with adhesive tape	
Tightening torque		(at room temperature) < 1.2 Nm	

7.3.5 Memory configuration

Memory banks

The memory is divided logically into three different memory banks:

Memory bank (decimal)	Memory type	Description
MemBank 10_2	TID	Is defined by the manufacturer, contains the class identifier of a tag
MemBank 01_2	EPC	Contains the EPC UID, the protocol and the CRC of a tag
MemBank 00_2	RESERVED	Contains the access and kill password

The graphic below illustrates the exact memory utilization: Each box in the right part of the graphic represents one word (16 bit) in the memory.

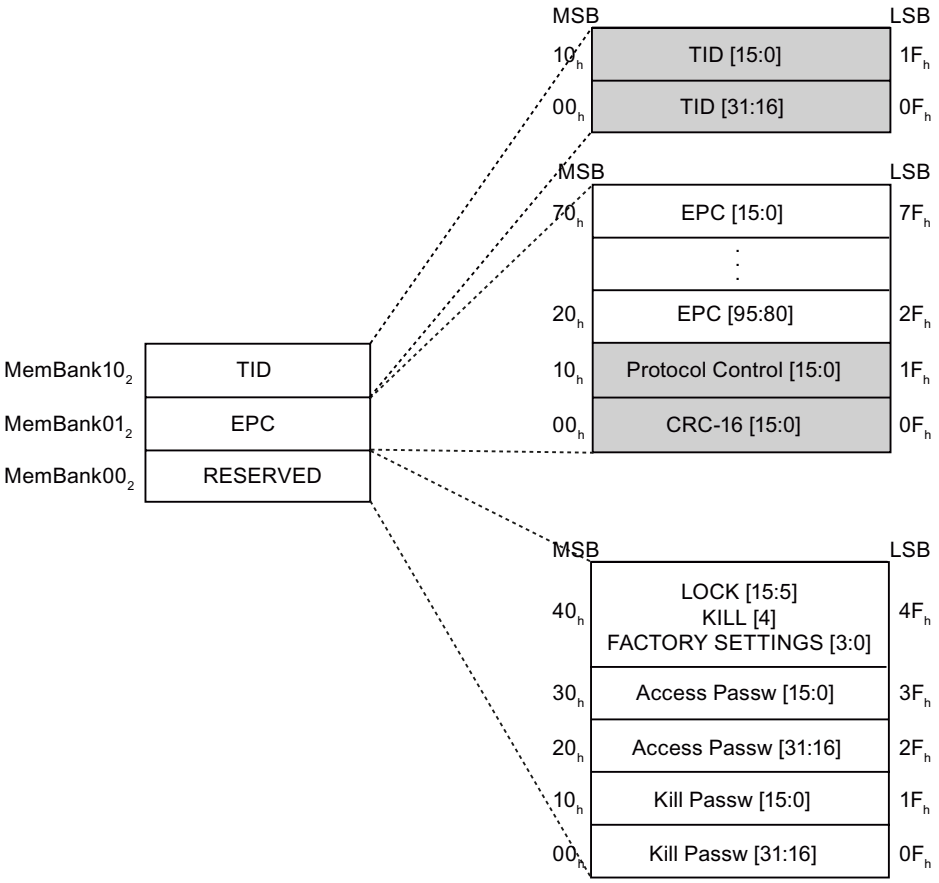

Color	Access by SIMATIC RF660R / SIMATIC RF610M
	Read
	Write / read

Reading the memory bit

The EPC ID is automatically read during the sensing cycle of the stationary or mobile reader. (see "SIMATIC RF660R Parameterization Manual", Section "EPC Class 1 GEN 2 protocol settings" or "SIMATIC RF610M Instruction Manual").
In addition, the TID, the EPC ID, the protocol command bits, the CRC-16 bits, the access password and the kill password can be read using the "tagDataRead" XML command. (see "SIMATIC RF660R Function Manual", Section "Smart reader tag data reading" and Section "FCC channel ID settings").

Reserved memory bank: programming or modifying memory areas

The memory areas of the reserved memory bank can be programmed using the SIMATIC RF660R reader:

- Using the "tagDataWrite" XML command (see "SIMATIC RF660R Function Manual", Section "Smart reader tag data writing")

Alternatively, the memory areas of the reserved memory bank can be modified using the mobile RF610M reader:

- Using the "Write" function in the data editor (see "SIMATIC RF610M Instruction Manual", Section "Write tag")

EPC memory bank: programming or modifying EPC ID

The EPC ID can be programmed using the SIMATIC RF660R reader:

- Using the "tagProgramID" XML command (see "SIMATIC RF660R Function Manual", Section "Smart reader tag ID programming")

Alternatively, the EPC ID can be modified using the mobile RF610M reader:

- Using the "Write ID" function (see "SIMATIC RF610M" Instruction Manual, Section "Write ID"

7.3.6 Technical Specifications

7.3.6.1 Mechanical data

Property	Description
Dimensions (L x W x H) • Transponder • Spacer	 • 127 x 38 x 6 mm • 157 x 39 x 12 mm
Design	Plastic enclosure (PP; food safe)
Housing color	Anthracite
Weight • Transponder • Spacer • Transponder with spacer	 • Approx. 18 g • Approx. 22 g • Approx. 40 g
Mounting on metal	Preferably with spacer

7.3.6.2 Electrical data

Characteristic	Description	
	Europe	USA / Canada
Air interface	According to ISO 18 000/ISO -6	
Frequency band	865 … 868 MHz	915 MHz
Necessary[2] transmit power	2 W (ERP)	4 W (EIRP)
Read distance • non-metallic carriers • on conductive plastic • on metal using spacers[1]	 • typ. 6 m • typ. 1 m • typ. 4 m	
Write distance • non-metallic carriers • on conductive plastic • on metal using spacers[1]	 • typ. 4 m • typ. 0.7 m • typ. 3 m	
Polarization type	Linear	
Minimum distance to transmitting antenna	Approx. 0.2 m	
Energy source	Magnetic energy via antenna, without battery	
Multi-tag capability	Yes, minimum distance between data carriers ≥ 50 mm	

[1] Metallic surface approx. 30 x 30 cm

[2] For maximum read/write distances

See also

Reading range when mounted on ESD carrier materials (Page 198)
Reading range on flat metallic carrier plates (Page 194)
Reading range when mounted on non-metallic carriers (Page 189)

7.3.6.3 Memory specifications

Property	Description
Type	EPC Class 1 Gen2
Memory organization	EPC code 96 bit
Protocol	ISO 18000-6C
Data retention time	10 years
Read cycles	Unlimited
Write cycles	100 000 min.

7.3.6.4 Environmental conditions

Property	Description
Temperature range during operation	-25 °C … +80 °C
Temperature range during storage	-40 °C to +70 °C
Shock Vibration compliant with EN 60721-3-7 Class 7 M3	100 g, 50 g
Torsion and bending load	Not permissible
Degree of protection	IP 67

7.3.5.2 Chemical resistance of the transponder RF620T

The following table provides an overview of the chemical resistance of the data memory made of polypropylene.

	Concentration	20 °C	50 °C
Acetic acid	5 / 50	○○○○	○○○○
Aluminum acetate, w.		○○○○	○○○○
Aluminum chloride	10	○○○○	○○○○
Aluminum nitrate, w.		○○○○	○○○○
Aluminum salts		○○○○	○○○○
Aminoacetic acid (glycocoll, glycine)	10	○○○○	○○○○
Ammonia	25	○○○○	○○○○
	10	○○○○	○○○○
Ammonia gas		○○○○	○○○○
Ammonia, w.	conc.	○○○○	○○○○
Ammonium chloride	100	○○○○	○○○○
Ammonium chloride, w.		○○○○	○○○○
Arsenic acid, w.		○○○○	○○○○
Ascorbic acid, w.		○○○○	○○○○
Battery acid	38	○○○○	○○○○
Benzene		○○	-
Borax		○○○○	○○○○
Boric acid, w.	10	○○○○	○○○○
Brake fluid		○○○○	○○○○
Bromine		-	-
Butane, gas, liquid	techn. pure	○○○○	○○○○
Butyl acetate (acetic acid butyl ester)		○○	-
Calcium chloride,		○○○○	○○○○
Calcium chloride, w./ alcoholic		○○○○	○○○
Calcium nitrate, w.		○○○○	○○○○
	50	○○○○	○○○○
Carbonic acid	saturated	○○○○	○○○○
Chloric acid	20	○○○○	-
Chlorine		–	–
Chloroacetic acid		○○○○	○○○○
Chrome baths, tech.		–	–
Chromic acid	10	○○○○	○○○○
Chromic acid, w		○○○○	○○
	20 / 50	○○	○○
Chromium salts		○○○○	○○○○
Chromosulphuric acid	conc.	-	-
Citric acid	10	○○○○	○○○○
Common salt		○○○○	○○○○

	Concentration	20 °C	50 °C
Crude oil	100	○○○○	○○
Detergent	High	○○○○	○○○○
Diesel fuel		○○○○	
Diesel oil	100	○○○○	
Diglycole acid	30	○○○○	○○○○
Emissions alkaline/containing hydrogen fluoride /carbon dioxide	Low	○○○○	○○○○
Emissions containing hydrochloric acid		○○○○	○○○○
Emissions containing sulphuric acid		○○○○	-
Engine oil		○○○○	
Ethanol	50 / 96	○○○○	○○○○
Ethyl alcohol	96 / 40	○○○○	○○○○
Fluoride		○○○○	○○○○
Formaldehyde	10	○○○○	○○○○
	40	○○○○	○○○
Formaldehyde solution	30	○○○○	○○○○
Formic acid	50	○○○○	-
Fuel oil		○○○○	
Glycerin	any	○○○○	○○○○
Glycol		○○○○	○○○○
HD oil, motor oil, without aromatic compounds		○○○○	
Hydrochloric acid	1-5 / 20	○○○○	○○○○
	35	○○○○	○○○
	conc.	○○○○	○○○○
Hydrogen	techn. pure	○○○○	○○○○
Hydrogen sulphide	Low/saturated	○○○○	○○○○
Iron salts, w.	k. g.	○○○○	○○○○
Isopropanol	techn. pure	○○○○	○○○○
Lactic acid	3 / 85	○○○○	○○○
	80	○○○○	○○○○
Lactic acid, w.		○○○○	○○○○
Lysol		○○○○	○○
Machine oil	100	○○○○	
Magnesium salts	any	○○○○	○○○○
Magnesium salts, w.	k. g.	○○○○	○○○○
Mercury	pure	○○○○	○○○○
Methanol		○○○○	○○○○
Methyl alcohol, w.	50	○○○○	○○○○
Nickel salts	saturated	○○○○	○○○○
Nickel salts, w.	k. g.	○○○○	○○○○
Nitric acid		-	-

	Concentration	20 °C	50 °C
	50	○○	
	1-10	○○○○	○○○○
Nitrobenzol		○○○	○○
Oxalic acid		○○○○	○○○○
Petroleum	techn. pure	○○○○	
Petroleum spirit		-	-
Phosphoric acid	1-5 / 30	○○○○	○○○○
	85	○○○○	○○○
Phosphoric acid, w	20	○○○○	○○○○
Plasticizer		○○○○	○○
Potassium hydroxide	10 / 50	○○○○	○○○○
Potassium hydroxide, w.		○○○○	○○○○
Propane	liquid	○○○○	
Propane	gaseous	○○	
Prussic acid, w.		○○○○	○○○○
Sea water		○○○○	○○○○
Silicic acid	any	○○○○	○○○○
Sodium carbonate		○○○○	○○○○
Sodium carbonate, w. (soda)	k. g.	○○○○	○○○○
Sodium chloride, w.	k. g.	○○○○	○○○○
Sodium hydroxide solution	30 / 45 / 60	○○○○	○○○○
Sodium hydroxide solution, w.		○○○○	○○○○
Sodium hydroxide, w.		○○○○	○○○○
Sodium hypochlorite solution	diluted / 20	○○○○	○○
	50	○○	○○
Sulphur dioxide	Low	○○○○	○○○○
	moist	○○○○	○○
	liquid	-	-
Sulphuric acid	1-6 / 40 / 80	○○○○	○○○○
	20	○○○○	○○○
	60	○○○○	○○
	95	○○	-
	fuming	-	-
Uric acid		○○○○	
Vinegar		○○○○	○○○○
Water		○○○○	○○○○

Abbreviations	
○○○○	Resistant
○○○	Virtually resistant
○○	Limited resistance
○	Less resistant
−	Not resistant
w.	Aqueous solution
k. g.	Cold saturated

7.3.6 Certificates and approvals

7.3.6.1 Certificates and approvals

Table 7- 13 6GT2810-2HC00 - RF620T UHF container tag

Certificate	Description
CE	CE Approval to R&TTE

Table 7- 14 6GT2810-2HC00 - RF620T UHF container tag

Standards	
FCC Federal Communications Commission	Passive labels or transponders comply with the valid regulations; certification is not required
c UL us	This product is UL-certified for the USA and Canada. It meets the following safety standard(s): UL 60950-1 - Information Technology Equipment Safety - Part 1: General Requirements CSA C22.2 No. 60950 -1 - Safety of Information Technology Equipment UL Report E 205089

7.3.8 Dimension drawing

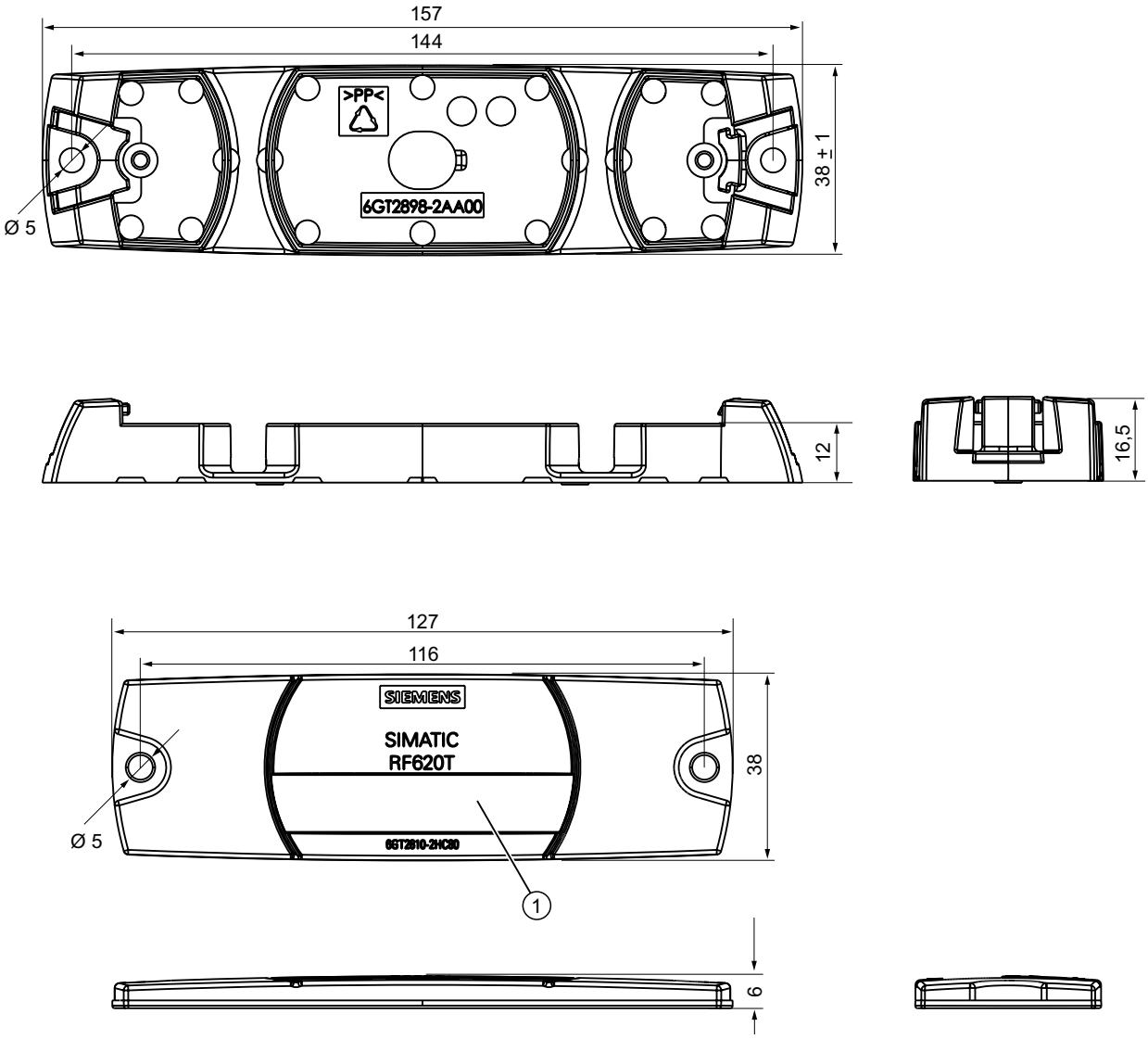

Figure 7-17 SIMATIC RF620T UHF container tag

Units of measurement: All dimensions in mm

Tolerances, unless indicated otherwise, are +-0.5 mm.

① Labeling area, see Section Characteristics (Page 188)

7.4 SIMATIC RF630T

7.4.1 Characteristics

The SIMATIC RF630T transponder is a passive (i.e. battery-free) and maintenance-free, cylindrical data carrier. It functions based on the UHF Class 1 Gen 2 technology and is used for saving the electronic product code (EPC) of 96 bits/240 bits. The transponder also has a 512-bit user memory.

Application areas include the mounting of metallic components (e.g. engine assembly in the automobile industry) as well as RF identification of tools, containers and metal frames.

The RF630T is small and rugged and suitable for industrial applications with IP68/IPX9K degree of protection. It is highly resistant to oil, grease and cleaning agents.

The SIMATIC RF630T is mounted directly onto metal surfaces to ensure optimum functioning and its typical detection range is 1.5 m.

SIMATIC RF630T transponder	Characteristics		
	Application	Identification tasks in rugged industrial environments	
	Frequency versions	Europe	USA / Canada
		868 MHz	915 MHz
	Air interface	according to ISO 18000-6C	
	Polarization	Linear	
	Memory	EPC 96 bit/240 bit Add-on-memory 64 bytes	
	Read/write range	Typically 1.2 m/1.5 m in connection with: • RF660R readers and • RF660A antennas	
		Typically 0.8 m in connection with: • RF630R reader and • RF660A antenna	
		Typically 0.7 m in connection with: • RF620R with integrated antenna	
	Installation	Suitable for direct mounting on conductive materials (preferably metal)	

7.4.2 Ordering data

Ordering data	Order no.
SIMATIC RF630T (Europe) • For attaching to metal surfaces • Frequency 865 MHz to 868 MHz	6GT2810-2EC00
SIMATIC RF630T (USA / Canada) • For attaching to metal surfaces • Frequency 902 MHz to 928 MHz	6GT2810-2EC10

7.4.3 Planning application

7.4.3.1 Optimum antenna/transponder positioning with plane mounting of the transponder on metal

The maximum reading range is achieved when the reader antenna is positioned at right angles to the mounting surface. In the case of parallel mounting directly above the transponder, detection is not possible.

Positioning of two RF660A antennas (RF660R reader)

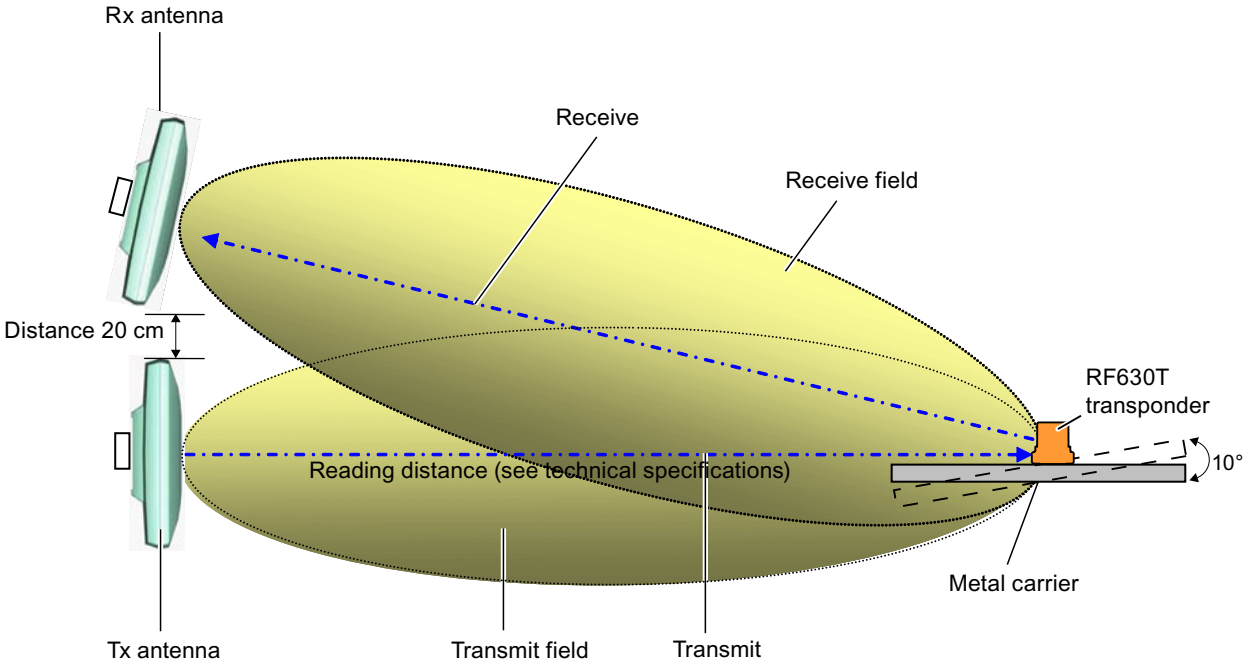

Figure 7-18 Example of optimum antenna/transponder positioning

Depending on the design of the metal bracket (surface parallel to the transmitting antenna), an angle of 10 degrees will have a favorable effect.

Positioning of the RF620R reader

The RF620R reader with an integrated circular polarized antenna can be placed in the same position as the RF660A antennas with reference to the RF630T transponder.

Please note the different reading distances for the RF600 readers in SectionElectrical data (Page 222)

Positioning of the RF660A antenna in combination with the RF630R reader

The RF630R reader can operate with an RF660A antenna which can be positioned as shown.

RF630T application example

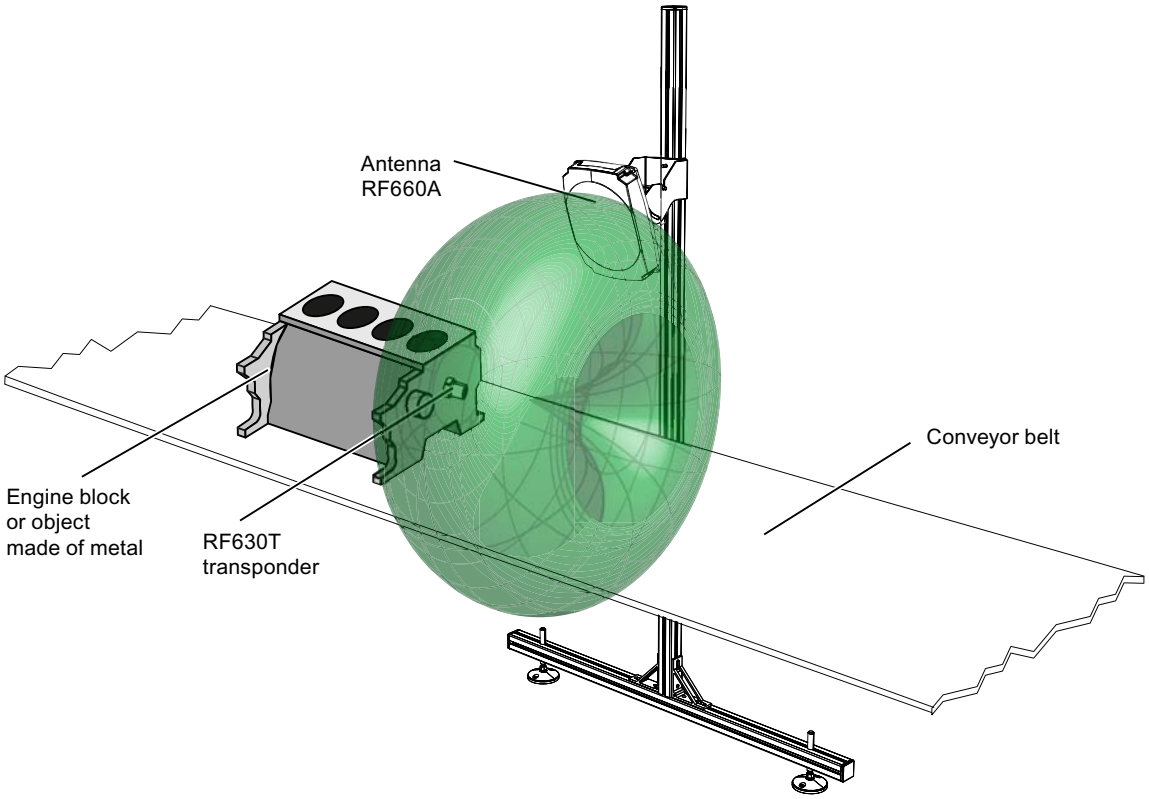

Figure 7-19 RF630T application example

7.4.3.2 Reading range when mounted on flat metallic carrier plates

The transponder generally has linear polarization. The polarization axis runs as shown in the diagram below. If the tag is centrally mounted on a flat metal plate, which may either be almost square or circular, it can be aligned in any direction since the transmitting and receiving RF660A antennas operate with circular polarization.

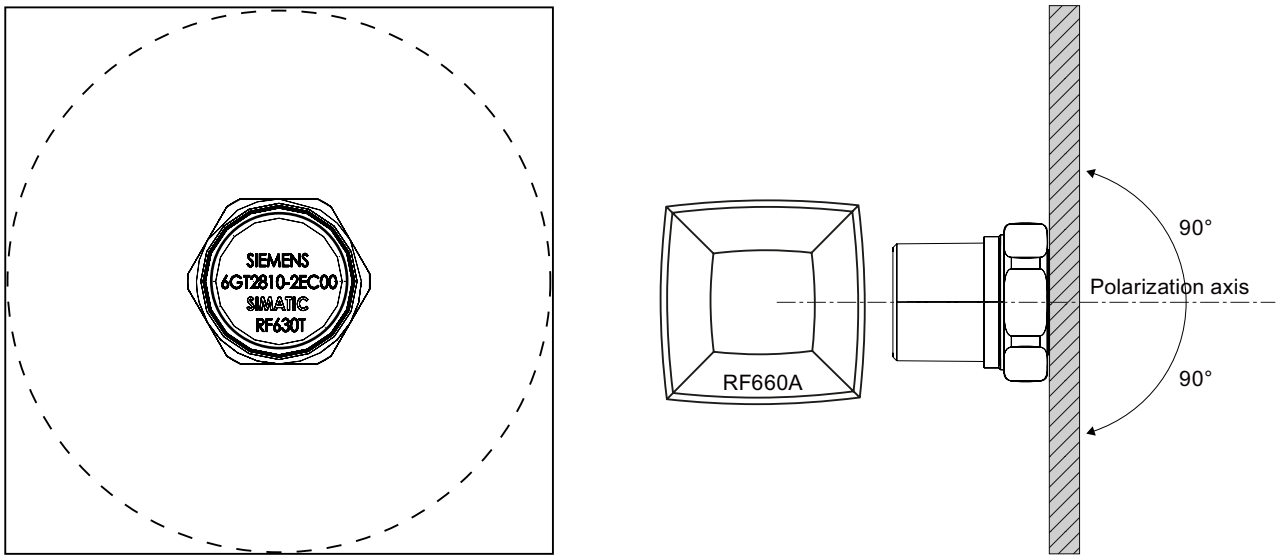

Figure 7-20 Optimum positioning of the transponder on a (square or circular) metal plate

Table 7- 15 Reading range on flat metallic carrier plates

Carrier plate material	Reading range
Metal plate of at least Ø 300 mm	100 %
Metal plate Ø 150 mm	Approx. 75 %
Metal plate Ø 120 mm	Approx. 50 %
Metal plate Ø 85 mm	Approx. 40 %

On rectangular carrier plates, the reading distance depends on the mounting orientation of the transponder

7.4.3.3 Influence of conducting walls on the reading range

If there are conducting walls or restrictions in the vicinity that could shade the radio field, a distance of approx. 10 cm is recommended between the transponder and the wall. In principle, walls have least influence if the polarization axis is vertical to the conducting wall.

Reading range: One conducting wall

Influence on reading range when positioned against one conducting wall

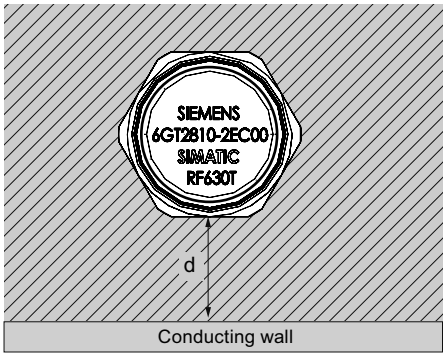

Top view

Distance d	20 mm	50 mm	100 mm	
Reading range	Approx. 40 %	Approx. 40 %	Approx. 90 %	Wall height 20 mm
	Approx. 40 %	Approx. 90 %	Approx. 90 %	Wall height 50 mm
	Approx. 40 %	Approx. 40 %	Approx. 90 %	Wall height 100 mm

Reading range: Two conducting walls

Influence on reading range when positioned against two conducting walls

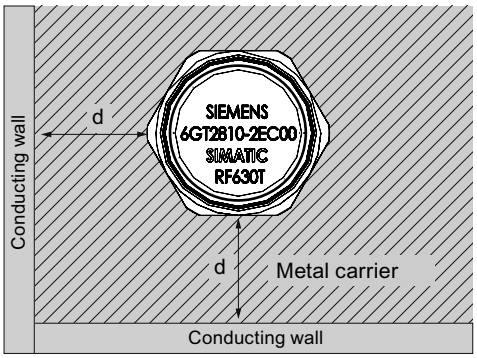

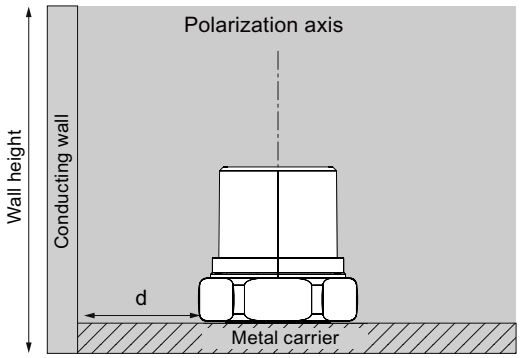

Side view

Distance d	20 mm	50 mm	100 mm	
Reading range	Approx. 90 %	Approx. 90 %	Approx. 90 %	Wall height 20 mm
	Approx. 25 %	Approx. 90 %	Approx. 90 %	Wall height 50 mm

Influence on reading range when positioned against two conducting walls				
	Approx. 25 %	Approx. 90 %	Approx. 90 %	Wall height 100 mm

The values specified in the tables above must be complied with.

7.4.3.4 Directional radiation pattern of the transponder

Preferably, align the data carrier orthogonal to the transmitting antenna. If, however, the tag including the metallic carrier plate is tilted, the reading range will be reduced.

NOTICE
Incorrect alignment of the transponder
When you align the transponder in parallel with the transmitting antenna, it cannot be read!

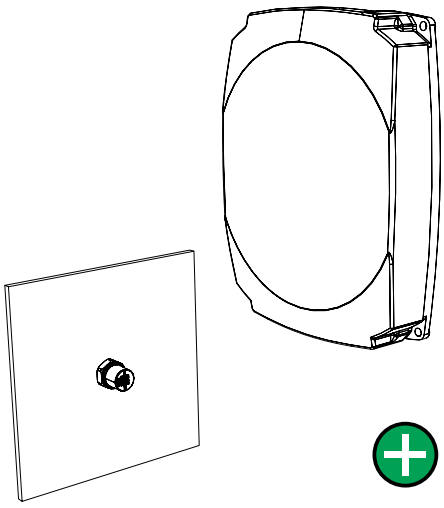

Optimum alignment of the transponder to the transmitting antenna

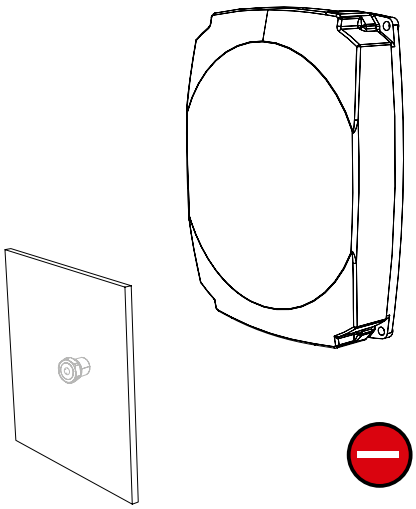

Incorrect alignment of the transponder to the transmitting antenna

Rotation about the polarization axis

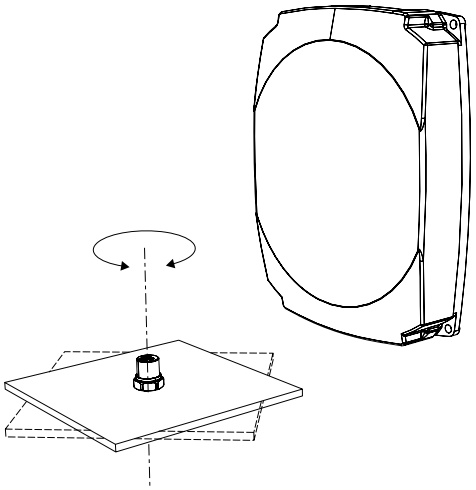

If the transponder mounting surface is circular there is almost no change in the reading range.

Rotation of the mounting plane

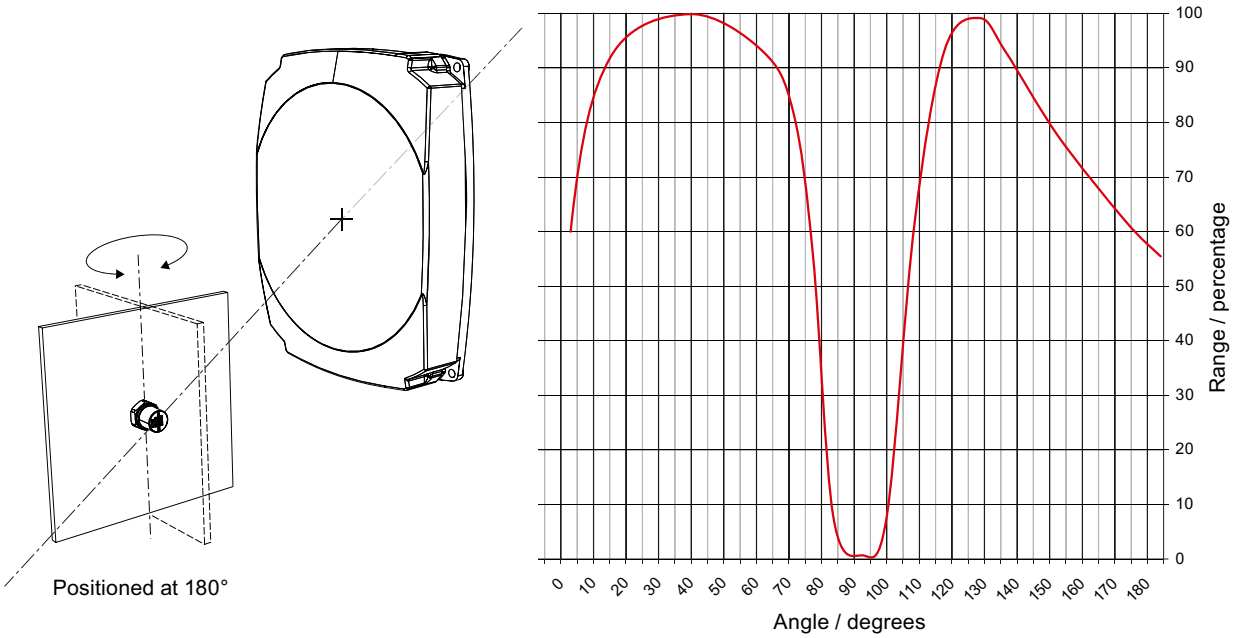

Figure 7-21 Characteristics of the transponder on rotation of the mounting plane

7.4.4 Mounting instructions

Properties	Description
Type of installation	M6 bolt fixing, spanner size 19 mm
Tightening torque	(at room temperature) ≤ 6 Nm

Note

Make sure that the mounting surface is even when mounting the transponder. Electrical contact between the mounting surface and the transponder is necessary.

Without a metal surface the transponder does not function.

7.4.5 Memory configuration

SIMATIC memory configuration

The following graphic shows the structure of the virtual SIMATIC memory for the RF620R/RF630R reader and explains the function of the individual memory areas. The SIMATIC memory configuration is based on the 4 memory banks, as they are defined in EPC Global.

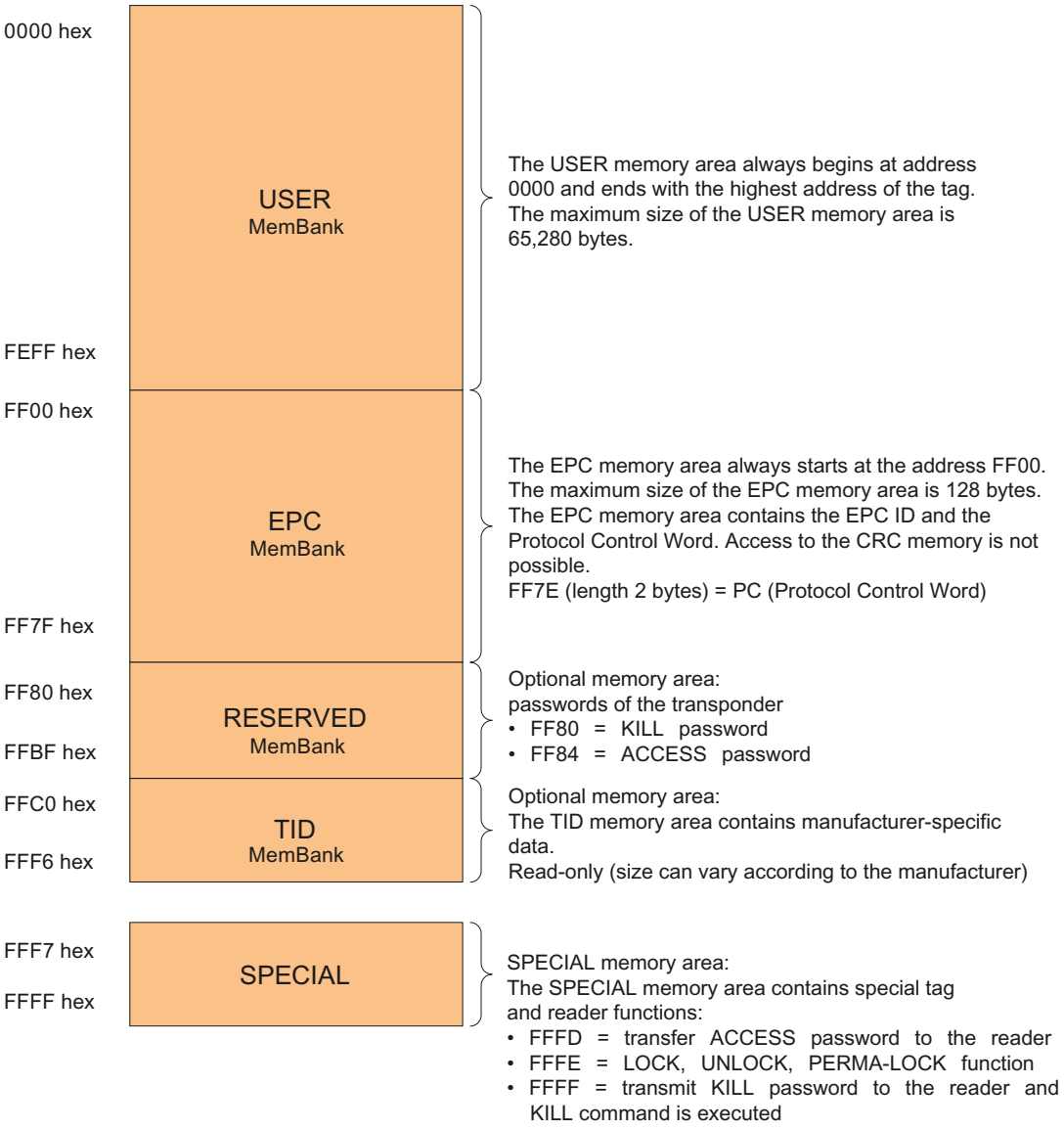

Figure 7-22 SIMATIC memory model

Memory configuration for RF630T

Tag	User [hex]	EPC		TID	RESERVED (passwords)	Special	
		Range	Access			KILL-PW	Lock function
RF630T *	00 - 3F	FF00-FF0B (240 bit = FF00-FF1D)	read/ write	FFC0-FFC7	FF80-FF87	Yes	Yes

Memory representation according to EPC

The memory of the ISO 18000-6C G2XM chip is logically divided into four different memory banks:

Memory bank (decimal)	Memory type	Description
MemBank 11_2	USER	User-writable USER memory area
MemBank 10_2	TID	Is defined by the manufacturer, contains the class identifier and serial number of a tag
MemBank 01_2	EPC	Contains the EPC data, the protocol information and the CRC data of a tag. You can write to the EPC memory area. In the delivery condition, the memory contents can have the following states: • containing the same data • containing different data
MemBank 00_2	RESERVED	Contains the access password.

The graphic below illustrates the exact memory utilization: Each box in the right part of the graphic represents one word (16 bit) in the memory.

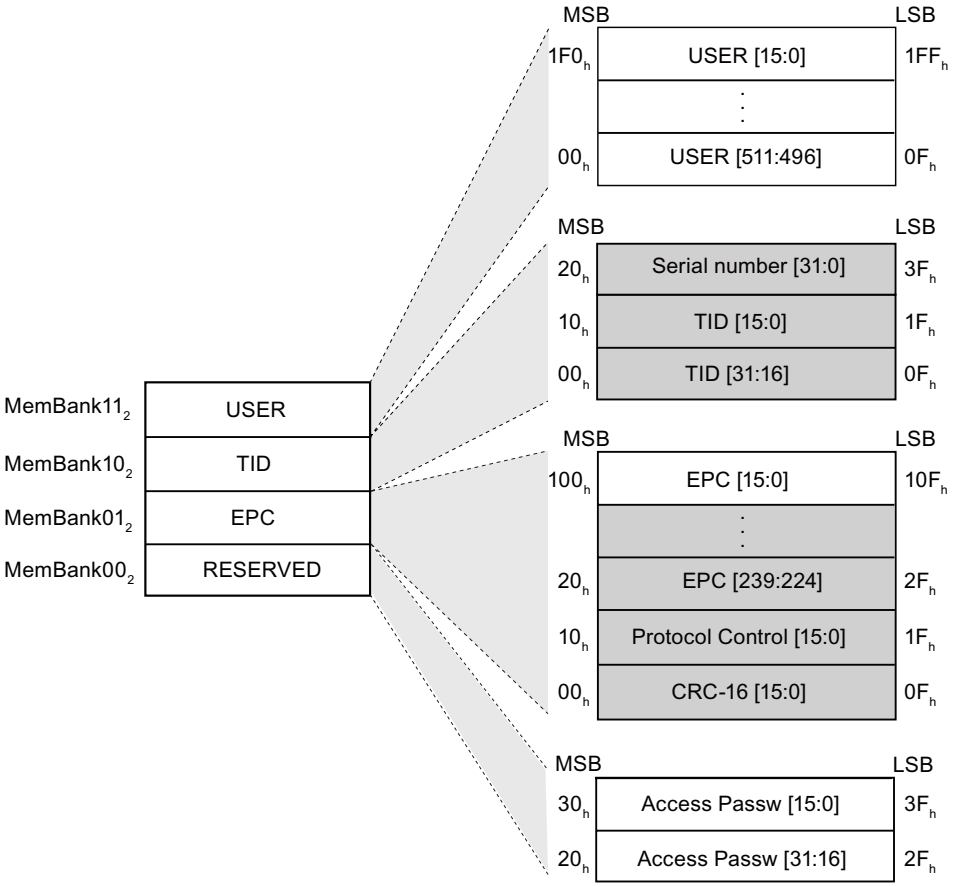

Color	Access by SIMATIC RF660R / SIMATIC RF610M
	Read
	Write / read

Figure 7-23 Representation of the RF630T memory configuration according to EPC (logical memory map)

7.4.6 Technical specifications

7.4.6.1 Mechanical data

Property	Description
Dimensions (D x H)	21 mm x 21 mm (without thread), tolerance 1 mm spanner size 19 mm
Design	Plastic enclosure: PA 6.6 GF, silicone-free Thread: Stainless steel
Weight	approx. 22 g
Installation	directly on metal without spacing

7.4.6.2 Electrical data

Property	Description	
	Europe	USA / Canada
Air interface	According to ISO 18 000-6 C	According to ISO 18 000-6 C
Frequency range	865 … 868 MHz	902 MHz ... 928 MHz [1]
Necessary transmit power	2 W (ERP)	4 W (EIRP)
Reading range Mounting on metal [2]	at least 1.2 m, typically 1.5 m	at least 1.2 m, typically 1.5 m
Writing range Mounting on metal [2]	at least 0.8 m typically 1.2 m	at least 0.8 m typically 1.2 m
Polarization type	Linear	Linear
Minimum distance to transmit antenna	Approx. 0.15 m	Approx. 0.15 m
Energy source	Energy via electro-magnetic field via antenna, no battery required	Energy via electro-magnetic field via antenna, no battery required
Multi-tag capability	Yes, minimum distance between data carriers ≥ 50 mm [3]	Yes, minimum distance between data carriers ≥ 50 mm [3]

[1] Reduction of range to about 70% at the band limits 902 MHz or 928 MHz; detection is guaranteed at 915 MHz due to frequency hopping procedure.

[2] Mounting on a flat surface with a diameter of at least 150 mm and at room temperature.

[3] When the minimum distances are not reached, there is a reduction in the maximum read and write distances of the transponder.

7.4.6.3 Memory specifications

Property	Description	
Type	EPC Class 1 Gen 2	
Memory organization	EPC code	96 bits/240 bits
	User memory	64 bytes
	TID	64 bits
	Reserved (passwords)	64 bits
Protocol	ISO 18000-6C	
Data retention time	10 years	
Read cycles	Unlimited	
Write cycles	Minimum at +22 °C 100 000	

7.4.6.4 Environmental conditions

Property	Description
Temperature range during operation	-25 °C to +85 °C
Temperature range during storage	-40 °C to +125 °C
Shock Vibration compliant with EN 60721-3-7 Class 7 M3	100 g, [1] 20 g, [1]
Torsion and bending load	Not permissible
Degree of protection	IP 68 according to EN 60529: (45 minutes. Immersion in water; water depth 1 m from top edge of enclosure at +20 °C) IPx9K according to DIN 40005-9 (steam jet-air ejector: 150 mm; 10 to 15 l/min; 100 bar; 75 °C)
MTBF	1.5×10^7 h

[1] The values for shock and vibration are maximum values and must not be applied continuously.

7.4.5.1 Chemical resistance of the transponder

The following table provides an overview of the chemical resistance of the plastic cap of the transponder made of PA 6.6 GF. Different values apply to the stainless steel bolt head. It must be emphasized that the plastic enclosure is extremely resistant to chemicals in automobiles (e.g.: oil, grease, diesel fuel, gasoline) which are not listed separately.

	Concentration	20 °C	60 °C
Acetic acid, w.	10	○	–
Ammonia, w.	conc.	+	+
	20	+	+
Benzol		+	+
Bleach solution (12.5 % effective chlorine)		-	–
Butane, gas, liquid		+ 1)	Nothing specified
Butyl acetate (acetic acid butyl ester)		+ 1)	Nothing specified
Calcium chloride, saturated 10% solution		+	○
Carbon tetrachloride	1-4 %	+	Nothing specified
Chlorine		–	–
Chrome baths, tech.		–	–
Ethyl alcohol, w., undenaturated	40	+	Nothing specified
Formaldehyde	30	+	Nothing specified
Formalin		+	Nothing specified
Glycerine		+	Nothing specified
Hydrochloric acid	10	-	–
Hydrogen sulphide	Dry	+	-
Iron salts, w.	k. g.	-	-
Isopropanol		+	+
Lactic acid, w.		+	–
Magnesium salts, w.		+ 1)	Nothing specified
Methyl alcohol, w.	50	+	Nothing specified
Nitric acid	10	-	–
Nitrobenzol		○ 1)	Nothing specified
Phosphoric acid	10	-	-
Potassium hydroxide, w.	10-15 %	○	Nothing specified
Propane		+	Nothing specified

	Concentration	20 °C	60 °C
Sodium carbonate, w. (soda)		+	Nothing specified
Sodium chloride, w.		○	Nothing specified
Sodium hydroxide	10 %	+	Nothing specified
Sulphur dioxide	Low	○	Nothing specified
Sulphuric acid	25	-	–
	10	-	–

1) Nothing specified for stainless steel

Abbreviations	
+	Resistant
○	Limited resistance
–	Not resistant
w.	Aqueous solution
k. g.	Cold saturated

7.4.6 Certificates and approvals

Table 7- 16 6GT2810-2EC00 - RF630T UHF Tool Tag - Europe

Certificate	Description
CE	Compatible with R&TTE directive

Table 7- 17 6GT2810-2EC10 - RF630T Gen 2 UHF Tool Tag - USA / Canada

Standards	
FCC Federal Communications Commission	Passive labels and transponders comply with the valid regulations; certification is not required.
c UL us	In preparation

7.4.8 Dimension drawing

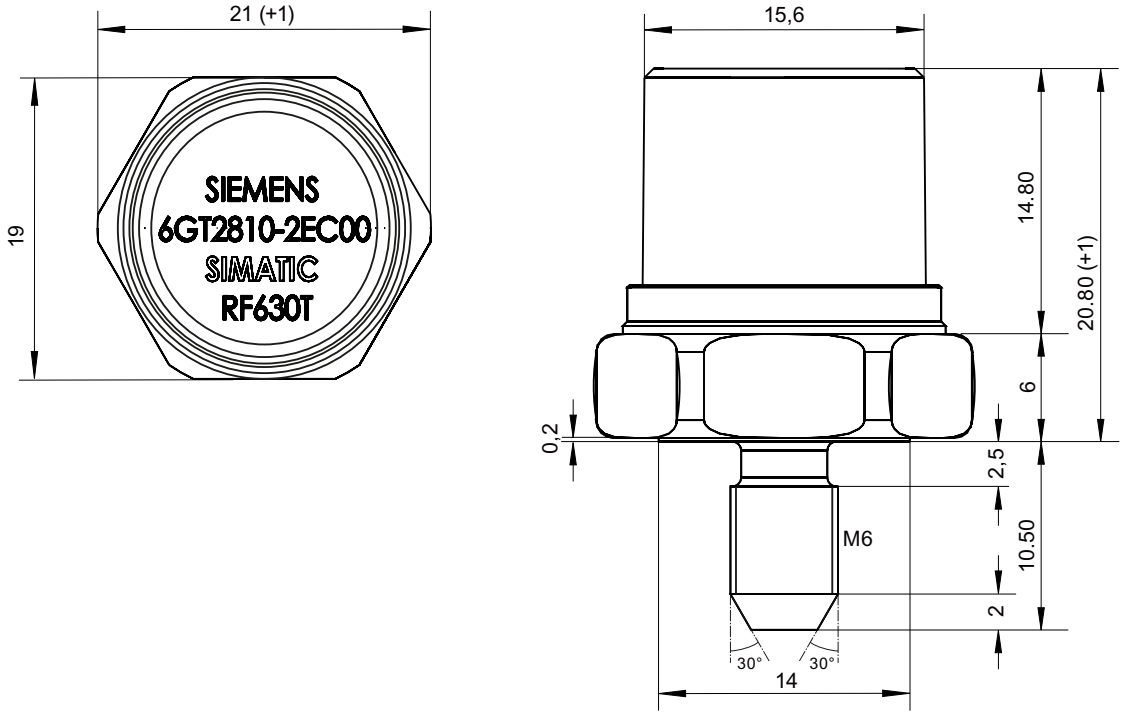

Figure 7-24 SIMATIC RF630T

Units of measurement: All dimensions in mm

General tolerances in accordance with DIN ISO 2768f.

7.5 SIMATIC RF640T

7.5.1 Characteristics

The SIMATIC RF640T Transponder is a passive, i.e. battery-free, round-shaped data carrier, operated in the UHF frequency spectrum on the basis of the UCODE HSL standards.

Fields of application are industrial asset management, RF identification of tools, containers and metallic equipment.

The tool tag is small, smart, and rugged, suitable for industrial applications with a high degree of protection (IP68) and is resistant to mineral oils, lubricants and cleaning agents.

The SIMATIC RF640T is preferably to be mounted on a flat metal surface of at least 150 mm diameter where it has a typical sensing distance of 2 m

SIMATIC RF640T transponder	Characteristics		
	Application	Identification tasks in rugged industrial environments	
	Frequency versions	Europe	USA / Canada
		868 MHz	915 MHz
	Polarization	Linear	
	Memory	256-byte EEPROM, of which 216 bytes are user-definable	
	Read/write range	typically 2.0 m in connection with: • RF660R readers and • RF660A antennas	
	Installation	Suitable for direct mounting on conductive materials (preferably metal)	

7.5.2 Ordering data

Ordering data	Order no.
SIMATIC RF640T (Europe) • For attaching to metal surfaces • Frequency 865 MHz to 868 MHz, • 216-byte user memory • -25 °C to +85 °C operating temperature • Dimensions 50 mm x 8 mm (DxH) • IP 68 / IP x9K degree of protection • ATEX	6GT2810-0DC00
SIMATIC RF640T (USA / Canada) • For attaching to metal surfaces • Frequency 915 MHz • 216-byte user memory • -25 °C to +85 °C operating temperature • Dimensions 50 mm x 8 mm (DxH) • IP 68 / IP x9K degree of protection	6GT2810-0DC10

7.5.3 Planning the use

7.5.3.1 Optimum antenna/transponder positioning with plane mounting of the transponder on metal

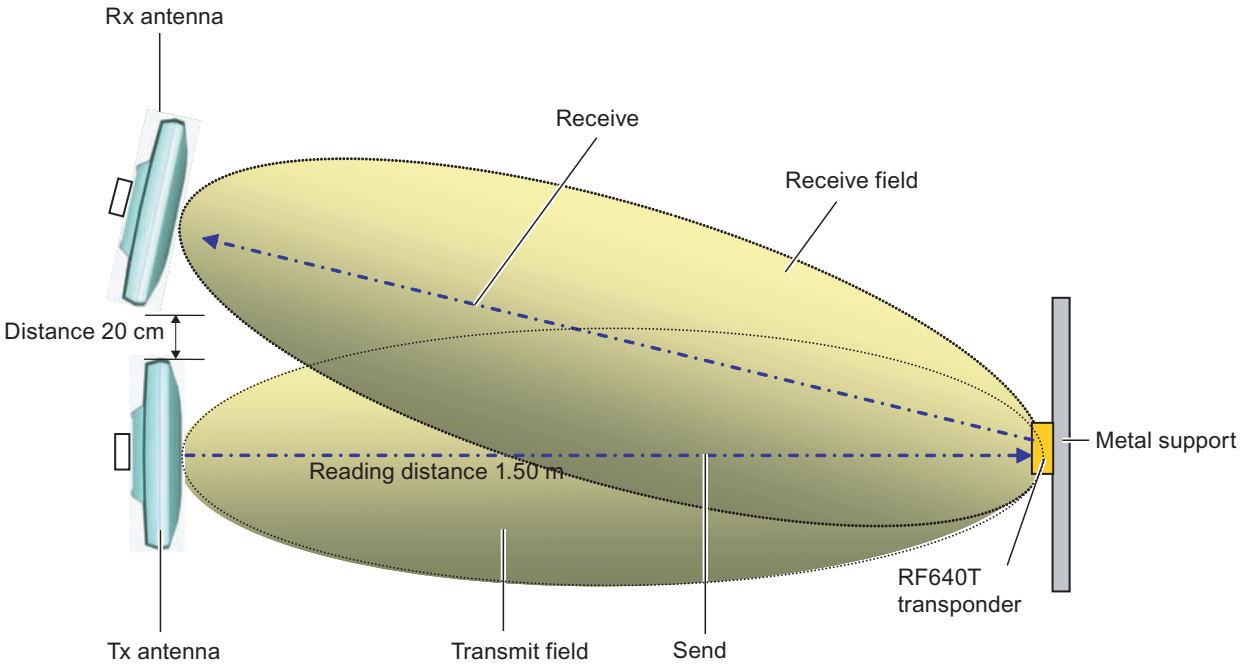

Figure 7-25 Example of optimum antenna/transponder positioning

7.5.3.2 Reading range on flat metallic carrier plates

The transponder generally has linear polarization. The polarization axis runs as shown in the diagram below. If the tag is centrically mounted on a flat metal plate, which may either be almost square or circular, it can be aligned in any direction since the transmitting and receiving RF660A antennas operate with circular polarization.

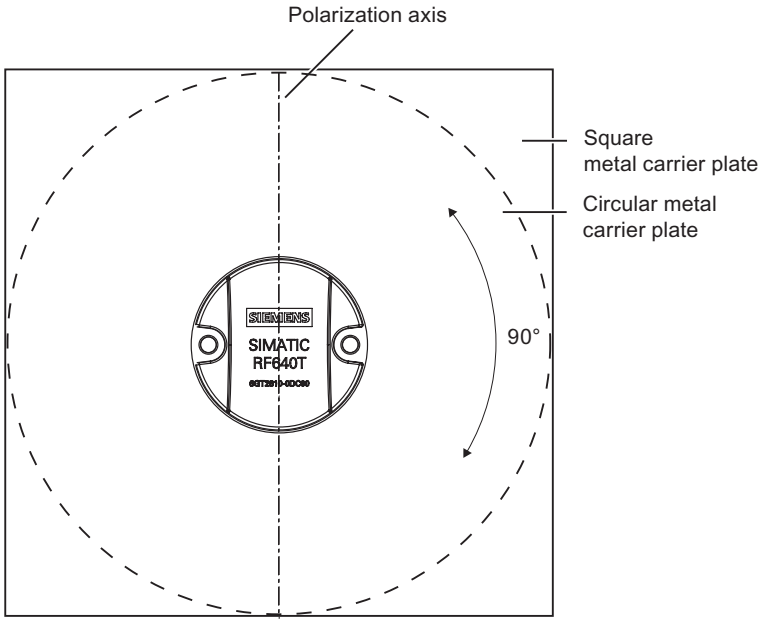

Figure 7-26 Optimum positioning of the transponder on a (square or circular) metal plate

Table 7- 18 Reading range on flat metallic carrier plates

Carrier plate material	Reading range
Metal plate of at least Ø 150 mm	100 %
Metal plate Ø 120 mm	Approx. 80 %
Metal plate Ø 85 mm	Approx. 55 %
Metal plate Ø 65 mm	Approx. 40 %

On rectangular carrier plates, the reading distance depends on the mounting orientation of the transponder A 90° rotation of the transponder about the axis of symmetry may result in greater reading distances

7.5.3.3 Influence of conducting walls on the reading range

If there are conducting walls or restrictions in the vicinity that could shade the radio field, a distance of approx. 10 cm is recommended between the transponder and the wall In principle, walls have least influence if the polarization axis is orthogonal to the conducting wall.

Reading range: One conducting wall

Influence on reading range when positioned against one conducting wall

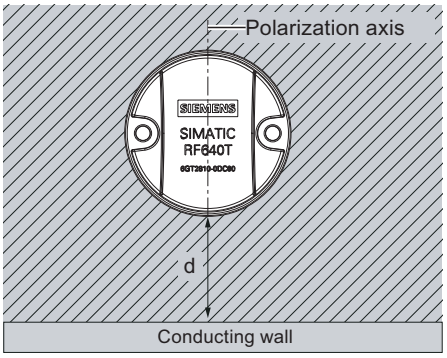

Top view

Distance d	20 mm	50 mm	100 mm	
Reading range	Approx. 90 %	Approx. 90 %	Approx. 95 %	Wall height 20 mm
	Approx. 80 %	Approx. 90 %	Approx. 90 %	Wall height 50 mm
	Approx. 70 %	Approx. 75 %	Approx. 90 %	Wall height 100 mm

Reading range: Two conducting walls

Influence on reading range when positioned against two conducting walls

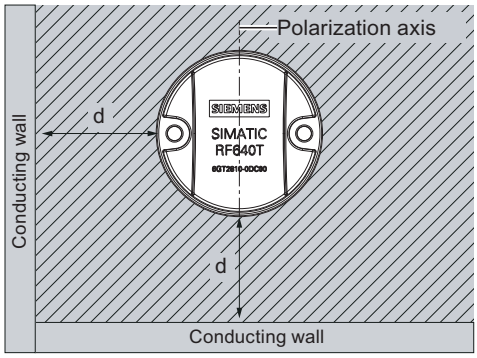

Top view

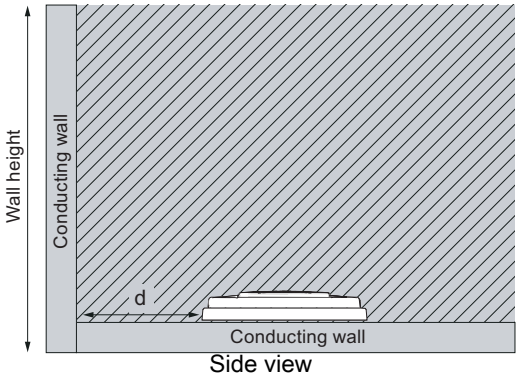

Side view

Distance d	20 mm	50 mm	100 mm	
Reading range	Approx. 75 %	Approx. 90 %	Approx. 90 %	Wall height 20 mm
	Approx. 50 %	Approx. 45 %	Approx. 80 %	Wall height 50 mm
	Approx. 40 %	Approx. 45 %	Approx. 75 %	Wall height 100 mm

The values specified in the tables above must be complied with.

7.5.3.4 Directional radiation pattern of the transponder

Preferably, align the tag parallel to the transmitting antenna. If, however, the tag including the metallic carrier plate is tilted, the reading range will be reduced.

Rotation about the polarization axis

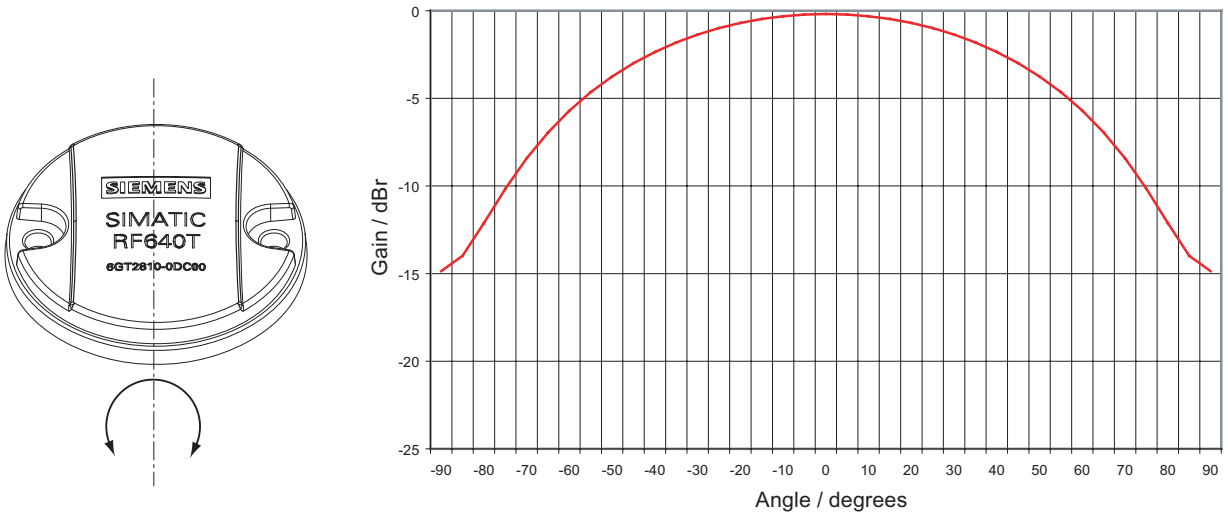

Figure 7-27 Transponder characteristics when rotated about the polarization axis

Rotation orthogonal to the polarization axis

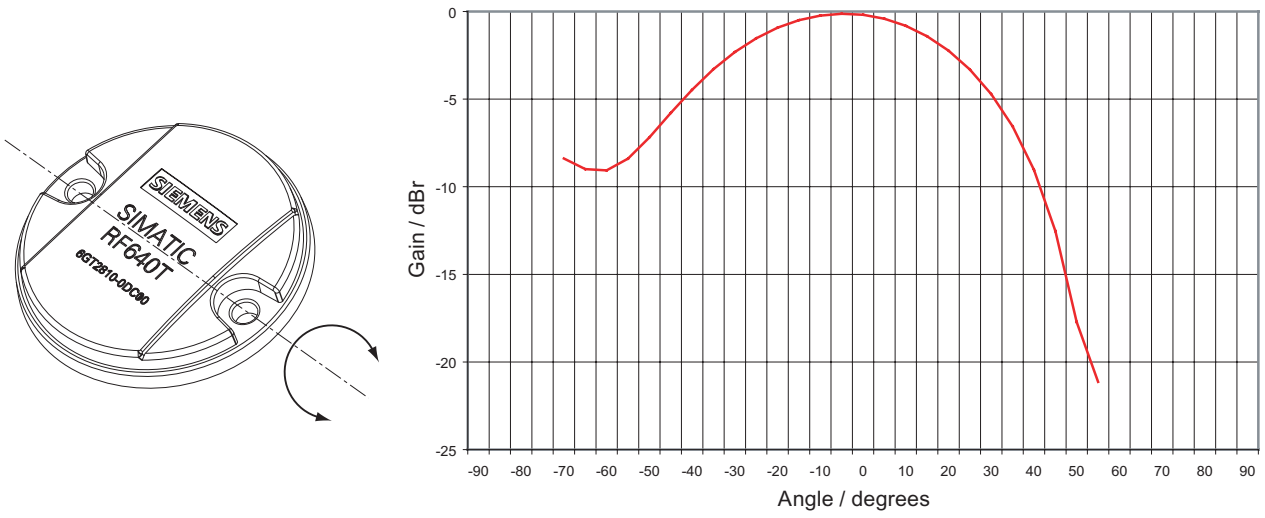

Figure 7-28 Transponder characteristics when rotated orthogonally to the polarization axis (within the tag plane)

7.5.3.5 Reading range when mounted on non-metallic carriers

The transponder is generally designed for mounting on metallic objects which provide the conditions for the maximum reading ranges

Table 7- 19 Reading range on non-metallic carriers

Carrier plate material	Reading range
Transponder on wooden carrier	Approx. 40 %
Transponder on plastic carrier	Approx. 35 %
Transponder on plastic mineral water bottle	Approx. 55 %

100% reading distance refers to a metal plate of at least 150 mm diameter.

7.5.3.6 Use of the transponder in hazardous areas

TÜV NORD CERT GmbH, appointed center no. 0044 as per Article 9 of the Directive 94/9/EC of the European Council of 23 March 1994, has confirmed the compliance with the essential health and safety requirements relating to the design and construction of equipment and protective systems intended for use in hazardous areas as per Annex II of the Directive.

The essential health and safety requirements are satisfied in accordance with standards EN 60079-0:2004, EN 50020:2002, IEC 61241-0:2004 and IEC 61241-11:2005.

Identification

The identification is as follows:

II 2 G Ex ib IIC T6 to T3 or II 2 D Ex ibD 21 T140°C, -25 °C < Ta°< +85 °C

7.5.3.7 Use of the transponder in hazardous areas for gases

Temperature class delineation for gases

The temperature class of the transponder for hazardous areas depends on the ambient temperature range:

Ambient temperature range	Temperature class
-25 °C to +85 °C	T3
-25 °C to +60 °C	T4
-25 °C to +40 °C	T5
-25 °C to +30 °C	T6

WARNING

Ignitions of gas-air mixtures

When using the RF640T transponder, check to ensure that the temperature class is observed in respect of the requirements of the area of application

Non-compliance with the permitted temperature ranges while using the transponder can lead to ignitions of gas-air mixtures.

WARNING

Ignitions of gas-air mixtures

The maximum transmitting power of the transmitter used to operate the transponder must not exceed 2 W.

Non-compliance with the permissible transmitting power can lead to ignitions of gas-air mixtures.

7.5.3.8 Use of the transponder in hazardous areas for dusts

The equipment is suitable for dusts whose ignition temperatures for a dust layer of 5 mm are higher than 210 °C (smoldering temperature). With the ignition temperature specified according to IEC 61241-0 and IEC 61241-11 according to the type of ignition protection iD, the smoldering temperature of the dust layer is referenced in this case.

Temperature class delineation for dusts

Ambient temperature range	Temperature value
-25 °C < Ta < +85 °C	T140 °C

⚠ WARNING

Ignitions of dust-air mixtures

When using the RF640T transponder, check to ensure that the temperature values are complied with in connection with the requirements of the application area.

Non-compliance with the permitted temperature ranges while using the transponder can lead to ignitions of dust-air mixtures.

7.5.4 Mounting instructions

Properties	Description
Type of installation	Screw attachment, (M4 screws) (two grommets DIN 433 and two hexagon M4 socket head cap screws DIN 6912)
Tightening torque	(at room temperature) < 1.2 Nm

7.5.5 Technical Specifications

7.5.5.1 Mechanical data

Property	Description
Dimensions (D x H)	50 mm x 8 mm (+1 mm)
Construction	PCB with integrated antenna
Design	Plastic housing (PA12)
Weight	approx. 13 g
Mounting on metal	directly on metal without spacing

7.5.5.2 Electrical data

Property	Description	
	Europe	USA / Canada
Air interface	to ISO 18 000-6 B	to ISO 18 000-6 B
Frequency range	865 … 868 MHz	915 MHz [1]
Necessary transmit power	2 W (ERP)	4 W (EIRP)
Reading range Mounting on metal [2]	at least 1.5 m typically 2.0 m	at least 1.5 m typically 2.0 m
Writing range Mounting on metal [2]	at least 1.2 m typically 1.5 m	at least 1.2 m typically 1.5 m
Polarization type	Linear	Linear
Minimum distance to transmit antenna	Approx. 0.2 m	Approx. 0.2 m
Energy source	Magnetic energy via antenna, without battery	Magnetic energy via antenna, without battery
Multi-tag capability	Yes, minimum distance between data carriers ≥ 50 mm [3]	Yes, minimum distance between data carriers ≥ 50 mm [3]

[1] Reduction of range to about 70 % at the band limits 902 MHz or 928 MHz; recording is guaranteed at 915 MHz due to frequency hopping procedure.

[2] Mounting on a flat surface with a diameter of at least 150 mm

[3] When the minimum distances are not reached, there is a reduction in the maximum read and write distances of the transponder.

See also

Reading range on flat metallic carrier plates (Page 230)

Directional radiation pattern of the transponder (Page 232)

7.5.5.3 Memory specifications

Property	Description	
Type	256 byte EEPROM	
Data retention time	10 years	
Read cycles	Unlimited	
Write cycles	Minimum at +22 °C 100 000 Typically at +22 °C 1000 000	
Memory organization	UID memory (fixed code) (Bytes 0 ... 7)	8 bytes
	User memory (Bytes 8 ... 223)	216 bytes
	Reserved memory	32 bytes

7.5.5.4 Environmental conditions

Property	Description
Temperature range when operating in non-hazardous areas	-25 °C … 85 °C[1)]
Temperature range when operating in areas at risk of a gas explosion with temperature class T3-T6	See alsoUse of the transponder in hazardous areas for gases (Page 234) [2)]
Temperature range when operating in areas at risk of dust explosions with T140 °C	See alsoUse of the transponder in hazardous areas for dusts (Page 235) [2)]
Temperature range during storage	-40 °C … 125 °C[1)]
Shock Vibration compliant with EN 60721-3-7 Class 7 M3	100 g, [3)] 20 g, [3)]
Torsion and bending load	Not permissible
Degree of protection	IP 68 according to EN 60529: (45 minutes. immersion in water; water depth 1 m from top edge of housing at +20 °C)
	IP x9K according to EN 60529: • Steam blaster nozzle distance 150 mm • 10 to 15 l of water per minute • Pressure 100 bar • Temperature 75 °C • Test time 30 seconds
MTBF	1,54 x 10^7 h

[1)] At temperatures above 70 °C the casing may distort slightly; this does not however cause any impairment of function (mechanical or electrical).

[2)] Directive 94/9/EC of the European Council of 23 March 1994 must be complied with, see also Chapter "Using the transponder in hazardous areas".

[3)] The values for shock and vibration are maximum values and must not be applied continuously.

⚠ WARNING

Ignitions of gas-air or dust-air mixtures

When using the RF640T transponder, check to ensure that the temperature values are observed in respect of the requirements of the hazardous area of application.

Non-compliance with the permitted temperature ranges while using the transponder can lead to ignitions of gas-air or dust-air mixtures.

NOTICE

Damage to the surface of the housing

The values specified for the IP x9K test are maximum values and must not be applied continuously.

Protracted loading of the transponder can lead to damage to the surface of the housing due to high pressures.

7.5.5.5 Chemical resistance of the RF640T transponder

The following table gives an overview of the chemical composition of the data memory made from polyamide 12. The plastic housing has a notably high resistance to chemicals used in automobiles (e.g.: oil, grease, diesel fuel, gasoline) which are not listed separately.

	Concentration	20 °C	60 °C
Acetic acid, w.	50	–	–
Ammonia gas		○○○○	○○○○
Ammonia, w.	conc.	○○○○	○○○○
	10	○○○○	○○○○
Battery acid	30	○○	–
Benzol		○○○○	○○○
Bleach solution (12.5 % effective chlorine)		○○	–
Butane, gas, liquid		○○○○	○○○○
Butyl acetate (acetic acid butyl ester)		○○○○	○○○○
Calcium chloride, w.		○○○○	○○○
Calcium nitrate, w.	k. g.	○○○○	○○○
Carbon tetrachloride		○○○○	○○○○
Chlorine		–	–
Chrome baths, tech.		–	–
Detergent	High	○○○○	○○○○
Ethyl alcohol, w., undenaturated	96	○○○○	○○○
	50	○○○○	○○○○
Formaldehyde, w.	30	○○○	–
	10	○○○○	○○○
Formalin		○○○	–

	Concentration	20 °C	60 °C
Glycerine		○○○○	○○○○
Hydrochloric acid	10	○	−
Hydrogen sulphide	Low	○○○○	○○○○
Iron salts, w.	k. g.	○○○○	○○○○
Isopropanol		○○○○	○○○
Lactic acid, w.	50	○○	−
	10	○○○	○○
Lysol		○○	−
Magnesium salts, w.	k. g.	○○○○	○○○○
Mercury		○○○○	○○○○
Methyl alcohol, w.	50	○○○○	○○○○
Nickel salts, w.	k. g.	○○○○	○○○○
Nitric acid	10	○	−
Nitrobenzol		○○○	○○
Phosphoric acid	10	○	V
Plasticizer		○○○○	○○○○
Potassium hydroxide, w.	50	○○○○	○○○○
Propane		○○○○	○○○○
Sodium carbonate, w. (soda)	k. g.	○○○○	○○○○
Sodium chloride, w.	k. g.	○○○○	○○○○
Sodium hydroxide		○○○○	○○○○
Sulphur dioxide	Low	○○○○	○○○○
Sulphuric acid	25	○○	−
	10	○○○	−
Toluene		○○○○	○○○

Abbreviations	
○○○○	Resistant
○○○	Virtually resistant
○○	Limited resistance
○	Less resistant
−	Not resistant
w.	Aqueous solution
k. g.	Cold saturated

7.5.6 Certificates and approvals

Table 7- 20 6GT2810-0DC00 - RF640T UHF Tool Tag - Europe

Certificate	Description
CE	CE Approval to R&TTE
	For Directive 94/9/EC: EC type test certification no. TÜV 07 ATEX 346241 Acknowledgement of the quality assurance TÜV 96 ATEX 1125 Q

Table 7- 21 6GT2810-0DC10 - RF640T UHF Tool Tag - USA / Canada

Standards	
FCC Federal Communications Commission	FCC Title 47, Part 15.sections 15.247 Radio Frequency Interference Statement This equipment has been tested and found to comply with the limits for a Class A digital device, pursuant to Part 15 of the FCC Rules.
Industry Canada Radio Standards Specifications	RSS-210 Issue 6, Sections 2.2, A8
c UL us	This product is UL-certified for the USA and Canada. It meets the following safety standard(s): UL 60950-1 - Information Technology Equipment Safety - Part 1: General Requirements CSA C22.2 No. 60950 -1 - Safety of Information Technology Equipment UL Report E 205089

7.5.6.1 Manufacturer's declaration RF640T UHF Tool Tag Version 1

The plant that manufactured the RF640T UHF Tool Tag Version 1 has an ATEX quality assurance system recognized by TÜV NORD with notification number
TÜV 96 ATEX 1125 Q. The type test certification for the RF640T UHF Tool Tag Version 1 is stored by TÜV 07 ATEX 346241.

Manufacturer's address

Siemens AG
Automation and Drives
System Engineering A&D SE
Würzburger Strasse 121
90766 Fürth, Germany.

7.5.7 Dimension drawing

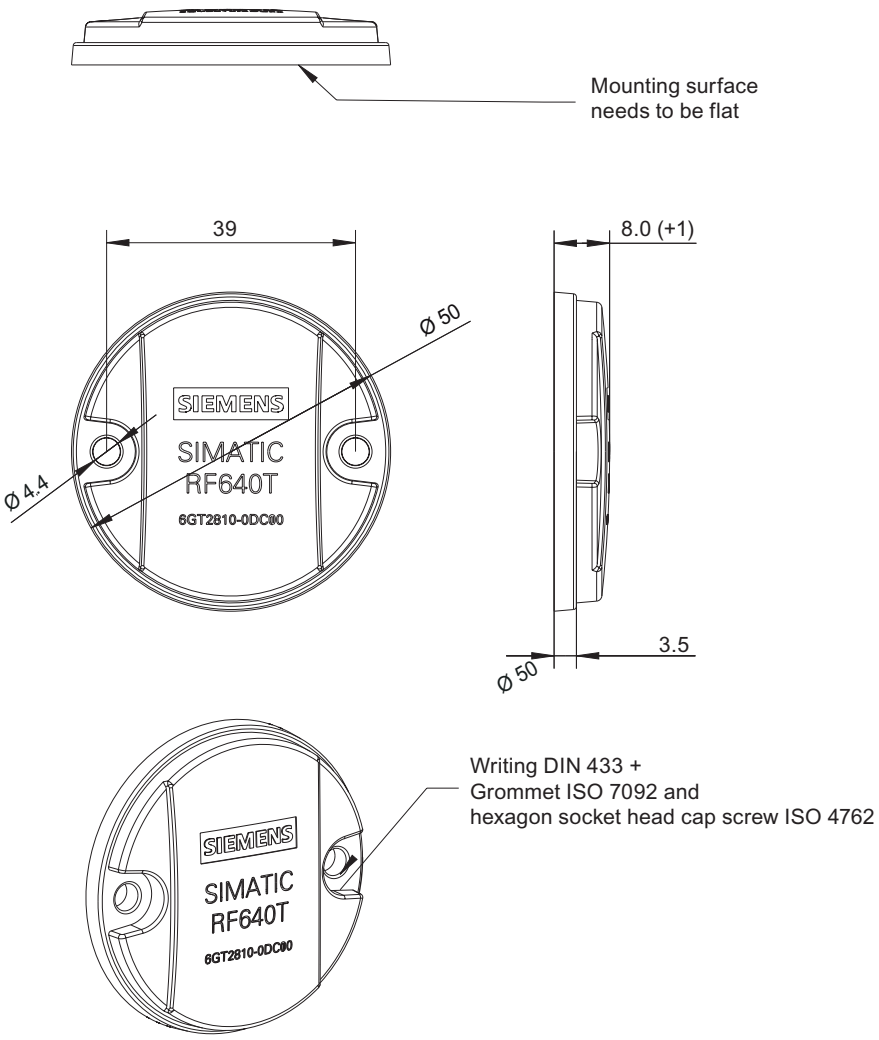

Figure 7-29 SIMATIC RF640T UHF Tool Tag Version 1

Units of measurement: All dimensions in mm

7.6 SIMATIC RF640T Gen 2

7.6.1 Characteristics

The SIMATIC RF640T Gen 2 transponder is a passive (i.e. battery-free) and maintenance-free, round-shaped data carrier. It functions based on the UHF Class 1 Gen 2 technology and is used for saving the electronic product code (EPC) of 96 bits/240 bits. The transponder also has a 512-bit user memory.

Fields of application are industrial asset management, RF identification of tools, containers and metallic equipment.

The tool tag is small, smart, and rugged, suitable for industrial applications with degree of protection IP68. It is resistant to mineral oils, lubricants and detergents.

Preferably the SIMATIC RF640T is to be mounted direct on a flat metal surface of at least 150 mm diameter where it achieves a typical sensing distance of 4 m.

SIMATIC RF640T Gen 2 transponder	Features		
	Application	Identification tasks in rugged industrial environments	
	Frequency versions	Europe	USA / Canada
		868 MHz	915 MHz
	Air interface	according to ISO 18000-6C	
	Polarization	Linear	
	Memory	EPC 96 bit/240 bit Add-on-memory 64 bytes	
	Read/write range	Typically 4.0 m in connection with: • RF660R readers and • RF660A antennas	
		Typically 2 m in connection with: • RF630R readers and • RF660A antennas	
		Typically 2 m in connection with: • RF620R with integrated antenna	
	Installation	Suitable for direct mounting on conductive materials (preferably metal)	

7.6.2 Ordering data

Ordering data	Order no.
SIMATIC RF640T Gen 2 (Europe) • Frequency 865 MHz to 868 MHz • EPC 96 bits/240 bits • 64-byte user memory • -25 °C to +85 °C operating temperature • Dimensions (D x H) 50 mm x 8 mm	6GT2810-2DC00
SIMATIC RF640T Gen 2 (USA/Canada) • Frequency 902 MHz to 928 MHz • EPC 96 bits/240 bits • 64-byte user memory • -25 °C to +85 °C operating temperature • Dimensions (D x H) 50 mm x 8 mm	6GT2810-2DC10

7.6.3 Planning the use

7.6.3.1 Optimum antenna/transponder positioning with plane mounting of the transponder on metal

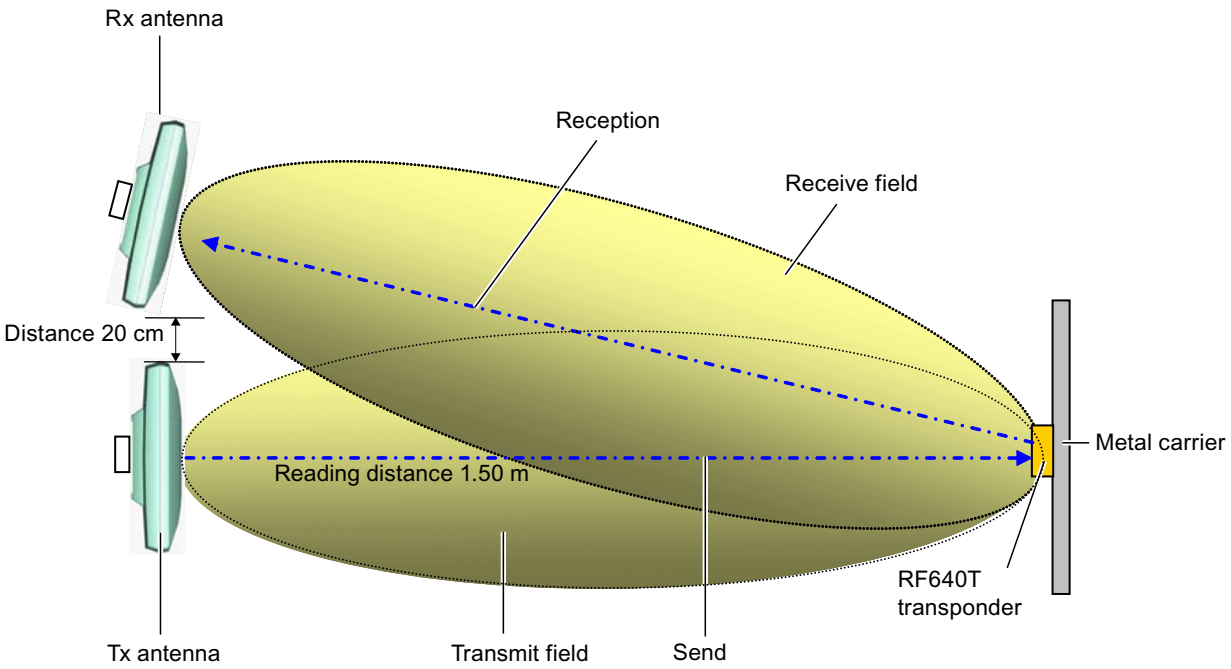

Figure 7-30 Example of optimum antenna/transponder positioning

7.6.3.2 Reading range when mounted on flat metallic carrier plates

The transponder generally has linear polarization. The polarization axis runs as shown in the diagram below. If the tag is centrically mounted on a flat metal plate, which may either be almost square or circular, it can be aligned in any direction since the transmitting and receiving RF660A antennas operate with circular polarization.

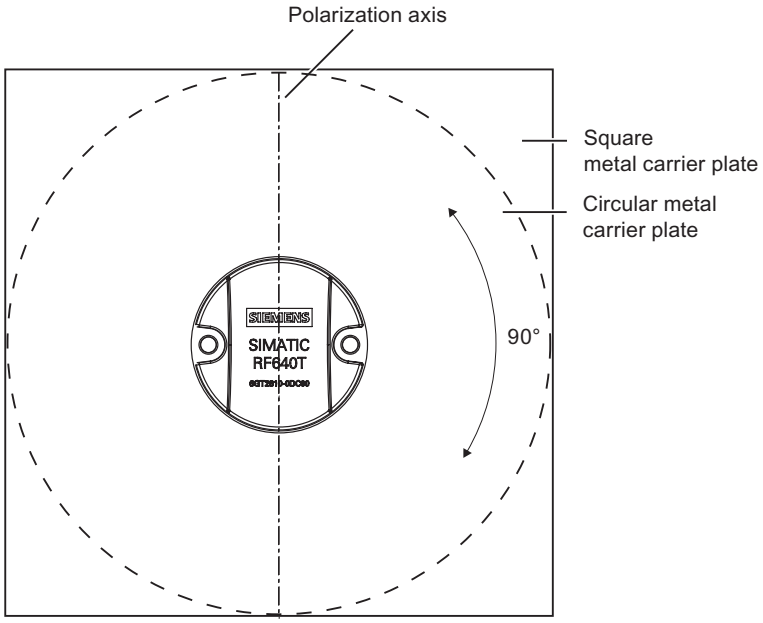

Figure 7-31 Optimum positioning of the transponder on a (square or circular) metal plate

Table 7- 22 Reading range on flat metallic carrier plates

Carrier plate material	Reading range
Metal plate of at least Ø 150 mm	100%
Metal plate Ø 120 mm	Approx. 80%
Metal plate Ø 85 mm	Approx. 55%
Metal plate Ø 65 mm	Approx. 40%

On rectangular carrier plates, the reading distance depends on the mounting orientation of the transponder

7.6.3.3 Reading range when mounted on non-metallic carriers

The transponder is generally designed for mounting on metallic objects which provide the conditions for the maximum reading ranges

Table 7- 23 Reading range on non-metallic carriers

Carrier plate material	Reading range
Transponder on wooden carrier	Approx. 40%
Transponder on plastic carrier	Approx. 35%
Transponder on plastic mineral water bottle	Approx. 55%
Transponder without base	Approx. 30%

100% reading distance refers to a metal plate of at least 150 mm diameter.

7.6.3.4 Influence of conducting walls on the reading range

If there are conducting walls or restrictions in the vicinity that could shade the radio field, a distance of approx. 10 cm is recommended between the transponder and the wall In principle, walls have least influence if the polarization axis is orthogonal to the conducting wall.

Reading range: One conducting wall

Influence on reading range when positioned against one conducting wall

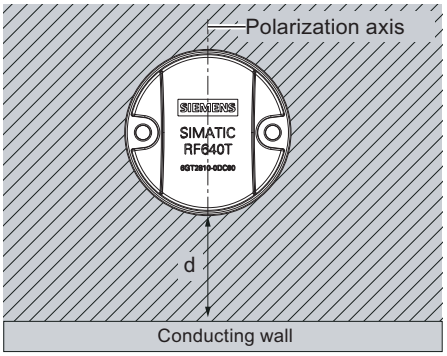

Top view

Distance d	20 mm	50 mm	100 mm	
Reading range	Approx. 90 %	Approx. 90 %	Approx. 95 %	Wall height 20 mm
	Approx. 80 %	Approx. 90 %	Approx. 90 %	Wall height 50 mm
	Approx. 70 %	Approx. 75 %	Approx. 90 %	Wall height 100 mm

Reading range: Two conducting walls

Influence on reading range when positioned against two conducting walls

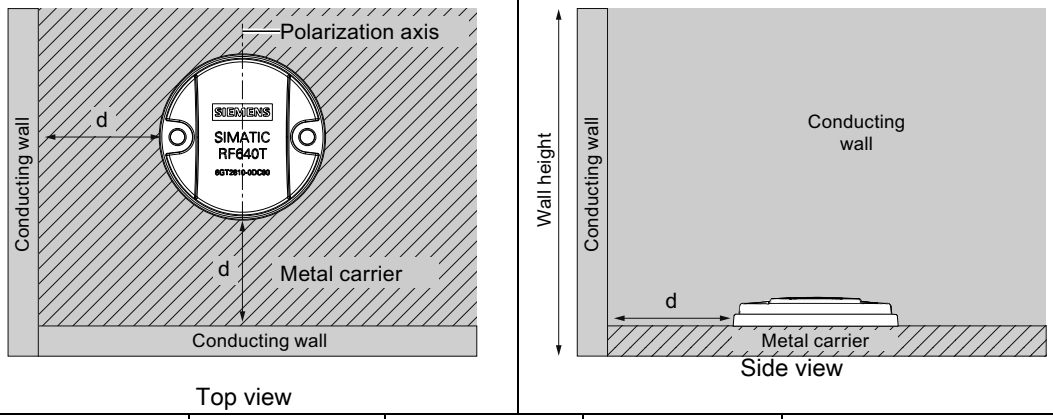

Distance d	20 mm	50 mm	100 mm	
Reading range	Approx. 75 %	Approx. 90 %	Approx. 90 %	Wall height 20 mm
	Approx. 50 %	Approx. 45 %	Approx. 80 %	Wall height 50 mm
	Approx. 40 %	Approx. 45 %	Approx. 75 %	Wall height 100 mm

The values specified in the tables above must be complied with.

7.6.3.5 Directional radiation pattern of the transponder

Preferably, align the tag parallel to the transmitting antenna. If, however, the tag including the metallic carrier plate is tilted, the reading range will be reduced.

Rotation about the polarization axis

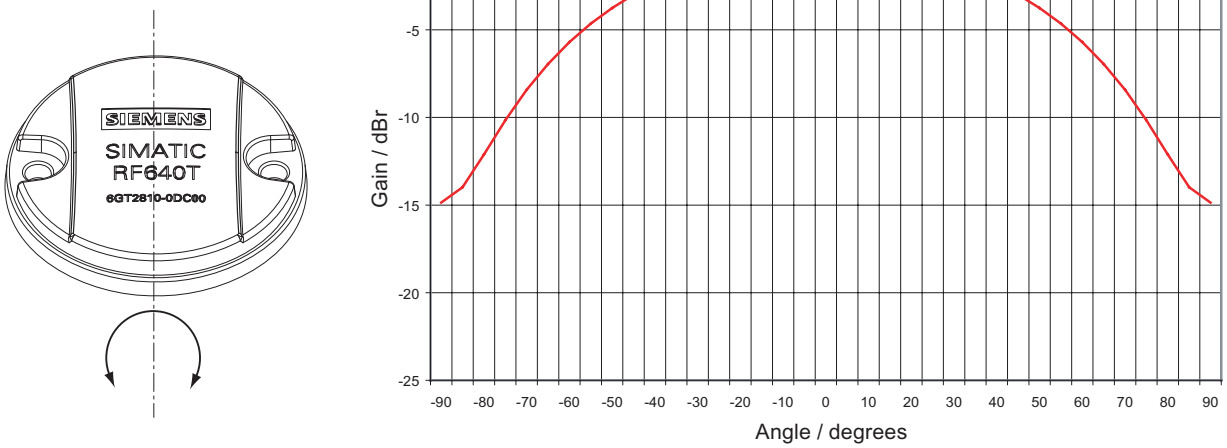

Figure 7-32 Transponder characteristics when rotated about the polarization axis

Rotation orthogonal to the polarization axis

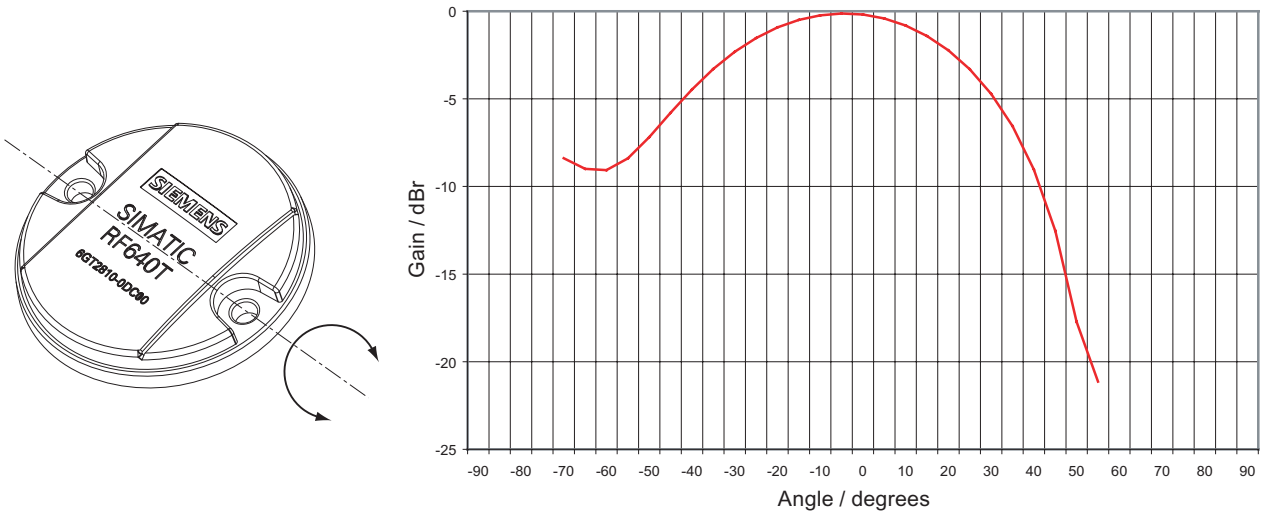

Figure 7-33 Transponder characteristics when rotated orthogonally to the polarization axis (within the tag plane)

7.6.3.6 Use of the transponder in the Ex protection area

TÜV NORD CERT GmbH, appointed center no. 0044 as per Article 9 of the Directive 94/9/EC of the European Council of 23 March 1994, has confirmed the compliance with the essential health and safety requirements relating to the design and construction of equipment and protective systems intended for use in hazardous areas as per Annex II of the Directive.

The essential health and safety requirements are satisfied in accordance with standards EN 60079-0: 2004, EN 60079-11: 2007, IEC 61241-0: 2004 and IEC 61241-11: 2005.

Identification

The identification is as follows:

II 2 G Ex ib IIC T6 to T3 or II 2 D Ex ibD 21 T140°C, -25 °C < Ta°< +85 °C

7.6.3.7 Use of the transponder in hazardous areas for gases

Temperature class delineation for gases

The temperature class of the transponder for hazardous areas depends on the ambient temperature range:

Ambient temperature range	Temperature class
-25 °C to +85 °C	T3
-25 °C to +60 °C	T4
-25 °C to +40 °C	T5
-25 °C to +30 °C	T6

WARNING

Ignitions of gas-air mixtures

When using the RF640T transponder, check to ensure that the temperature class is observed in respect of the requirements of the area of application

Non-compliance with the permitted temperature ranges while using the transponder can lead to ignitions of gas-air mixtures.

WARNING

Ignitions of gas-air mixtures

The maximum transmitting power of the transmitter used to operate the transponder must not exceed 2 W.

Non-compliance with the permissible transmitting power can lead to ignitions of gas-air mixtures.

7.6.3.8 Use of the transponder in hazardous areas for dusts

The equipment is suitable for dusts whose ignition temperatures for a dust layer of 5 mm are higher than 210 °C (smoldering temperature). With the ignition temperature specified according to IEC 61241-0 and IEC 61241-11 according to the type of ignition protection iD, the smoldering temperature of the dust layer is referenced in this case.

Temperature class delineation for dusts

Ambient temperature range	Temperature value
-25 °C < Ta < +85 °C	T140 °C

⚠ WARNING

Ignitions of dust-air mixtures

When using the RF640T transponder, check to ensure that the temperature values are complied with in connection with the requirements of the application area.

Non-compliance with the permitted temperature ranges while using the transponder can lead to ignitions of dust-air mixtures.

7.6.4 Mounting instructions

Properties	Description
Type of installation	Screw mounting ①, (M4 screws) (two DIN 433 washers and two M4 hexagon socket head cap screws DIN 6912)
Tightening torque	(at room temperature) < 1.2 Nm

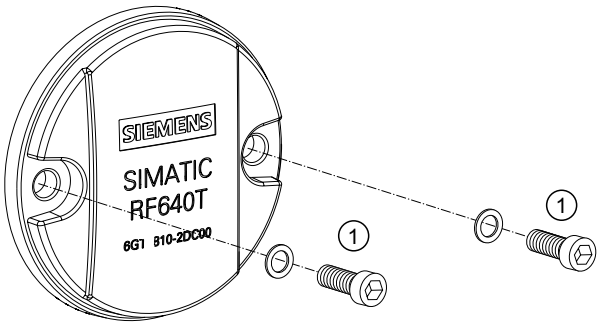

Figure 7-34 Screw mounting

Note

Make sure that the mounting surface is even when mounting the transponder.

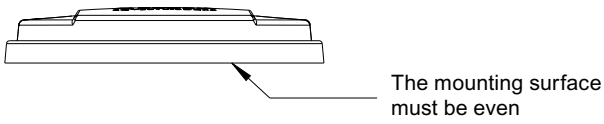

7.6.5 Memory configuration

SIMATIC memory configuration

The following graphic shows the structure of the virtual SIMATIC memory for the RF620R/RF630R reader and explains the function of the individual memory areas. The SIMATIC memory configuration is based on the 4 memory banks, as they are defined in EPC Global.

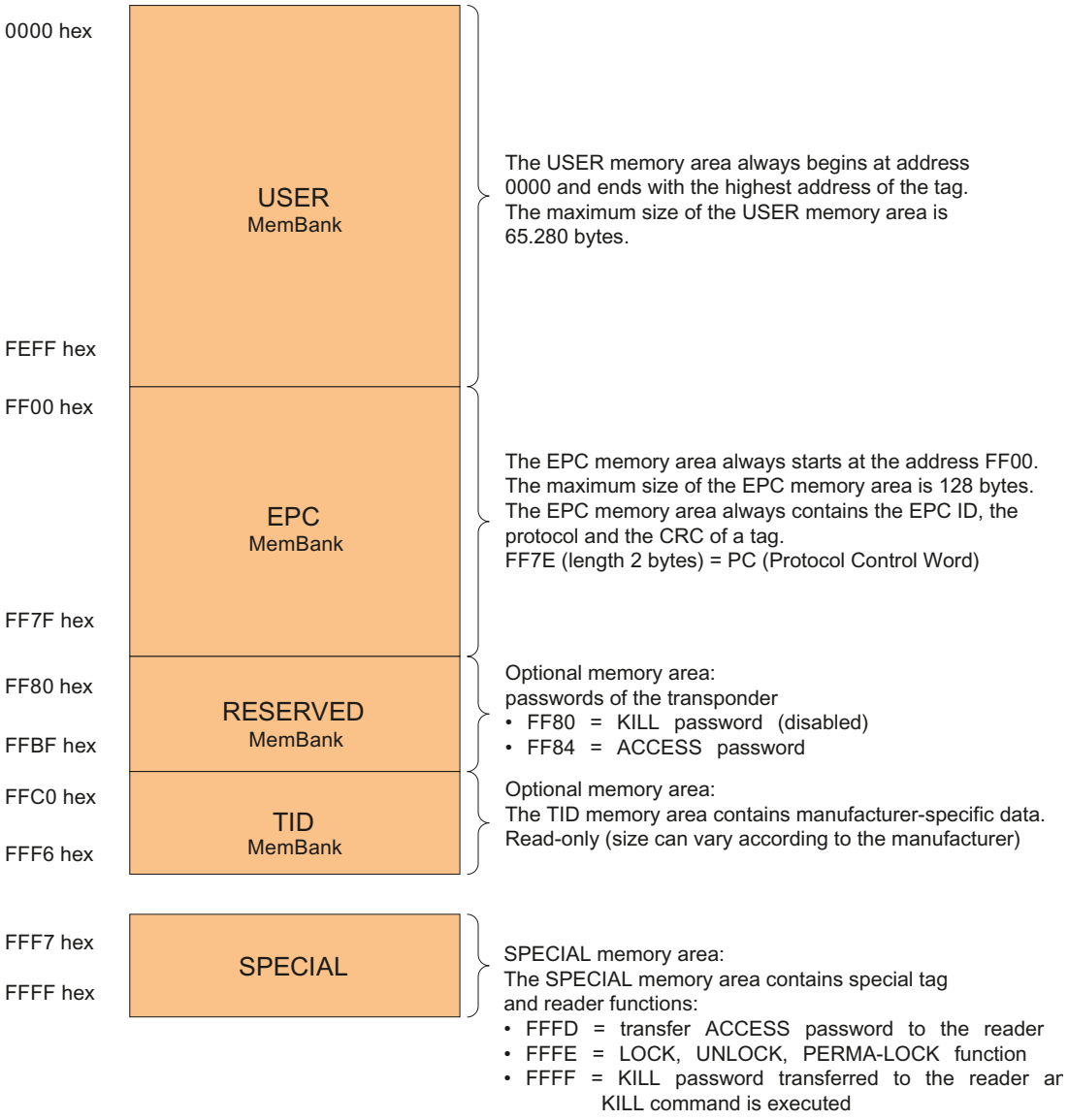

Figure 7-35 SIMATIC memory configuration

RF640T Gen 2 memory configuration

Tags	User [hex]	EPC		TID	RESERVED (passwords)	Special	
		Range	Access			KILL-PW	Lock function
RF640T Gen 2	00 - 3F	FF00-FF0B (240 bit = FF00-FF1D)	read/ write	FFC0-FFC7	FF80-FF87	LOCKED	Yes

Memory representation according to EPC

The memory of the ISO 18000-6C EPC Class 1 Gen 2 chip is logically divided into four different memory banks:

Memory bank (decimal)	Memory type	Designation
MemBank 11_2	USER	User-writable USER memory area
MemBank 10_2	TID	Is defined by the manufacturer, contains the class identifier and serial number of a tag
MemBank 01_2	EPC	Contains the EPC UID, the protocol and the CRC of a tag You can write to the EPC memory area. In the delivery condition, the memory contents can have the following states: • empty • containing the same data • containing different data
MemBank 00_2	RESERVED	Contains the access and kill password.

The graphic below illustrates the exact memory utilization: Each box in the right part of the graphic represents one word (16 bit) in the memory.

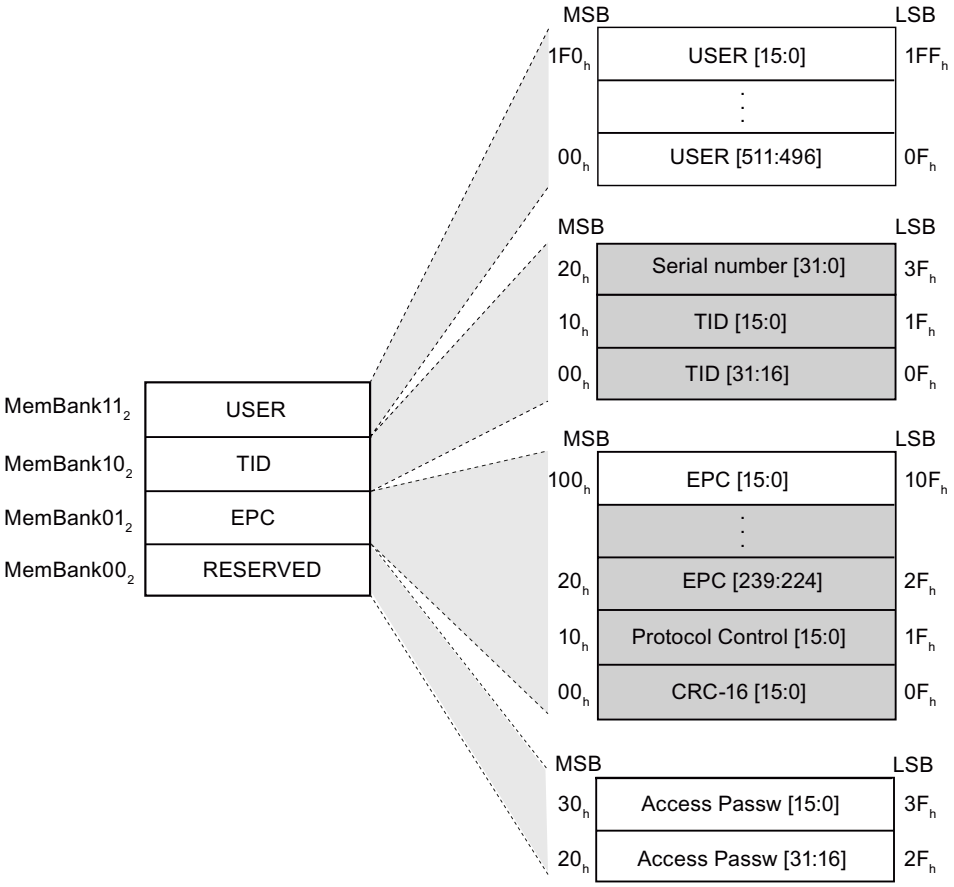

Color	Access by SIMATIC RF660R / SIMATIC RF610M
	Read
	Write / read

Figure 7-36 Representation of the memory configuration RF640T Gen 2 according to EPC (logical memory map)

7.6.6 Technical Specifications

7.6.6.1 Mechanical data

Property	Description
Dimensions (D x H)	50 mm x 8 mm (+1 mm)
Design	PCB with integrated antenna
Design	Plastic enclosure (PA12), silicone-free
Weight	approx. 13 g
Mounting on metal	directly on metal without spacing

7.6.6.2 Electrical data

Property	Description	
	Europe	USA / Canada
Air interface	According to ISO 18 000-6 C	According to ISO 18 000-6 C
Frequency range	865 … 868 MHz	902 MHz ... 928 MHz [1]
Necessary transmit power	2 W (ERP)	4 W (EIRP)
Reading range Mounting on metal [2]	at least 3 m typically 4.0 m	at least 3 m typically 4.0 m
Writing range Mounting on metal [2]	at least 2 m typically 3 m	at least 2 m typically 3 m
Polarization type	Linear	Linear
Minimum distance to transmit antenna	Approx. 0.2 m	Approx. 0.2 m
Energy source	Magnetic energy via antenna, without battery	Magnetic energy via antenna, without battery
Multi-tag capability	Yes, minimum distance between data carriers ≥ 50 mm [3]	Yes, minimum distance between data carriers ≥ 50 mm [3]

[1] Reduction of range to about 70% at the band limits 902 MHz or 928 MHz; recording is guaranteed at 915 MHz due to frequency hopping procedure.

[2] Mounting on a flat surface with a diameter of at least 150 mm

[3] When the minimum distances are not reached, there is a reduction in the maximum read and write distances of the transponder.

See also

Reading range when mounted on flat metallic carrier plates (Page 244)

Directional radiation pattern of the transponder (Page 246)

7.6.6.3 Memory specifications

Property	Description	
Type	EPC Class 1 Gen 2	
Memory organization	EPC code	96 bits/240 bits
	User memory	64 bytes
	TID	64 bits
	Reserved (passwords)	64 bits
Protocol	ISO 18000-6C	
Data retention time	10 years	
Read cycles	Unlimited	
Write cycles	Minimum at +22 °C 100 000	

7.6.6.4 Environmental conditions

Property	Description
Temperature range when operating in non-hazardous areas	-25 °C … 85 °C[1)]
Temperature range when operating in areas at risk of a gas explosion with temperature class T3-T6	See alsoUse of the transponder in hazardous areas for gases (Page 248) [2)]
Temperature range when operating in areas at risk of dust explosions with T140 °C	See alsoUse of the transponder in hazardous areas for dusts (Page 249) [2)]
Temperature range during storage	-40 °C … 125 °C[1)]
Shock Vibration compliant with EN 60721-3-7 Class 7 M3	100 g, [3)] 20 g, [3)]
Torsion and bending load	Not permissible
Degree of protection	IP 68 according to EN 60529: (45 minutes. immersion in water; water depth 1 m from top edge of housing at +20 °C)
	IP x9K according to EN 60529: • Steam blaster nozzle distance 150 mm • 10 to 15 l of water per minute • Pressure 100 bar • Temperature 75 °C • Test time 30 seconds
MTBF	1,54 x 10^7 h

[1)] At temperatures above 70 °C the casing may distort slightly; this does not however cause any impairment of function (mechanical or electrical).

[2)] Directive 94/9/EC of the European Council of 23 March 1994 must be complied with, see also Chapter "Using the transponder in hazardous areas".

[3)] The values for shock and vibration are maximum values and must not be applied continuously.

⚠ WARNING

Ignitions of gas-air or dust-air mixtures

When using the RF640T transponder, check to ensure that the temperature values are observed in respect of the requirements of the hazardous area of application.

Non-compliance with the permitted temperature ranges while using the transponder can lead to ignitions of gas-air or dust-air mixtures.

NOTICE

Damage to the surface of the housing

The values specified for the IP x9K test are maximum values and must not be applied continuously.

Protracted loading of the transponder can lead to damage to the surface of the housing due to high pressures.

7.6.6.5 Chemical resistance of the RF640T Gen 2 transponder

The following table gives an overview of the chemical composition of the data memory made from polyamide 12. The plastic housing has a notably high resistance to chemicals used in automobiles (e.g.: oil, grease, diesel fuel, gasoline) which are not listed separately.

	Concentration	20 °C	60 °C
Acetic acid, w.	50	–	–
Ammonia gas		○○○○	○○○○
Ammonia, w.	conc.	○○○○	○○○○
	10	○○○○	○○○○
Battery acid	30	○○	–
Benzol		○○○○	○○○
Bleach solution (12.5 % effective chlorine)		○○	–
Butane, gas, liquid		○○○○	○○○○
Butyl acetate (acetic acid butyl ester)		○○○○	○○○○
Calcium chloride, w.		○○○○	○○○
Calcium nitrate, w.	k. g.	○○○○	○○○
Carbon tetrachloride		○○○○	○○○○
Chlorine		–	–
Chrome baths, tech.		–	–
Detergent	High	○○○○	○○○○
Ethyl alcohol, w., undenaturated	96	○○○○	○○○
	50	○○○○	○○○○
Formaldehyde, w.	30	○○○	–
	10	○○○○	○○○
Formalin		○○○	–

	Concentration	20 °C	60 °C
Glycerine		○○○○	○○○○
Hydrochloric acid	10	○	–
Hydrogen sulphide	Low	○○○○	○○○○
Iron salts, w.	k. g.	○○○○	○○○○
Isopropanol		○○○○	○○○
Lactic acid, w.	50	○○	–
	10	○○○	○○
Lysol		○○	–
Magnesium salts, w.	k. g.	○○○○	○○○○
Mercury		○○○○	○○○○
Methyl alcohol, w.	50	○○○○	○○○○
Nickel salts, w.	k. g.	○○○○	○○○○
Nitric acid	10	○	–
Nitrobenzol		○○○	○○
Phosphoric acid	10	○	V
Plasticizer		○○○○	○○○○
Potassium hydroxide, w.	50	○○○○	○○○○
Propane		○○○○	○○○○
Sodium carbonate, w. (soda)	k. g.	○○○○	○○○○
Sodium chloride, w.	k. g.	○○○○	○○○○
Sodium hydroxide		○○○○	○○○○
Sulphur dioxide	Low	○○○○	○○○○
Sulphuric acid	25	○○	–
	10	○○○	–
Toluene		○○○○	○○○

Abbreviations	
○○○○	Resistant
○○○	Virtually resistant
○○	Limited resistance
○	Less resistant
–	Not resistant
w.	Aqueous solution
k. g.	Cold saturated

7.6.7 Certificates and approvals

Table 7- 24 6GT2810-2DC00 - RF640T Gen 2 UHF Tool Tag - Europe

Certificate	Description
CE	CE approval according to R&TTE guideline
	For Directive 94/9/EC: EC type test certification no. TÜV 07 ATEX 346241 Acknowledgement of the quality assurance TÜV 96 ATEX 1125 Q

Table 7- 25 6GT2810-2DC10 - RF640T Gen 2 UHF Tool Tag - USA/Canada

Standard	
FCC Federal Communications Commission	Passive labels or transponders comply with the valid regulations; certification is not required
C UL US	This product is UL-certified for the USA and Canada. It meets the following safety standard(s): UL 60950-1 - Information Technology Equipment Safety - Part 1: General Requirements CSA C22.2 No. 60950 -1 - Safety of Information Technology Equipment UL Report E 205089

7.6.7.1 Manufacturer's declaration RF640T Gen 2 UHF Tool Tag Version 1

The plant that manufactured the RF640T Gen 2 UHF Tool Tag Version 1 has an ATEX quality assurance system recognized by TÜV NORD with notification number TÜV 96 ATEX 1125 Q. The type test certification for the RF640T Gen 2 UHF Tool Tag Version 1 is stored by TÜV 07 ATEX 346241.

Manufacturer's address

Siemens AG
Automation and Drives
System Engineering A&D SE
Würzburger Strasse 121
90766 Fürth, Germany.

7.6.8 Dimension drawing

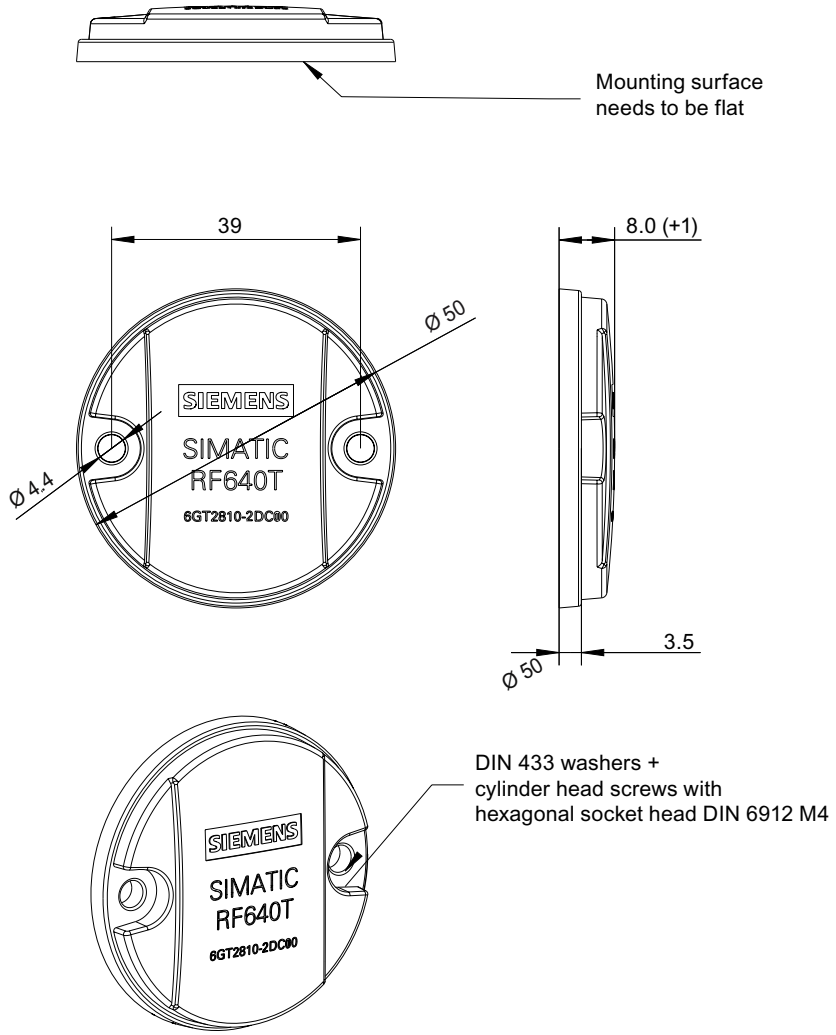

Figure 7-37 SIMATIC RF640T Gen 2 UHF Tool Tag Version 1

Units of measurement: All dimensions in mm

7.7 SIMATIC RF680T

7.7.1 Characteristics

The heat-resistant SIMATIC RF680T transponder is a passive, maintenance-free data carrier. It operates on the basis of the UHF Class 1 Gen 2 technology and is used for storing the electronic product code (EPC) of 96 bits/240 bits. The transponder also has a 512-bit user memory.

These transponders with limited service life are ideally suited to high-temperature applications
(e.g. the painting of vehicle bodies) as well as applications in production logistics.

The RF680T is rugged and suitable for industrial applications with IP68/IPX9K degree of protection.
It is highly resistant to oil, grease and cleaning agents.

The SIMATIC RF680T is mounted directly onto metal and non-metal carrier plates to ensure optimal operation and has a typical detection range of 4 m.

SIMATIC RF680T transponder	Characteristics	
	Application	Applications in production logistics and in assembly lines subject to high temperatures (up to +220 °C, e.g. paintshop).
	Frequency range	865 ... 928 MHz (ETSI and FCC)
	Air interface	according to ISO 18000-6C
	Polarization	Linear
	Temperature range	up to 220 °C
	Memory	EPC 96 bit/240 bit Add-on-memory 64 bytes
	Read/write range	Typically 3 m/4 m in connection with: • RF660R readers and • RF660A antennas
		Typically 1.4 m/2 m in connection with: • RF630R reader and • RF660A antenna
		Typically 1.4 m/2 m in connection with: • RF620R with integrated antenna
	Installation	Suitable for direct mounting on conductive and non-conductive materials.
	Material	Plastic PPS; silicone-free
	Dimensions	130 x 32 x 15 mm

7.7.2 Ordering data

Ordering data	Order no.
SIMATIC RF680T • Frequency 865 MHz to 928 MHz • EPC 96 bit/240 bit (64 bytes user memory) • -25 ... +220 °C • 130 x 32 x 15 mm	6GT2810-2HG80

7.7.3 Planning the use

The absolute values of the reading ranges specified below refer to a transmit power of 2 W ERP.

When the power is reduced (e.g. when a different reader is used), you will find the corresponding reduced reading ranges in the following table:

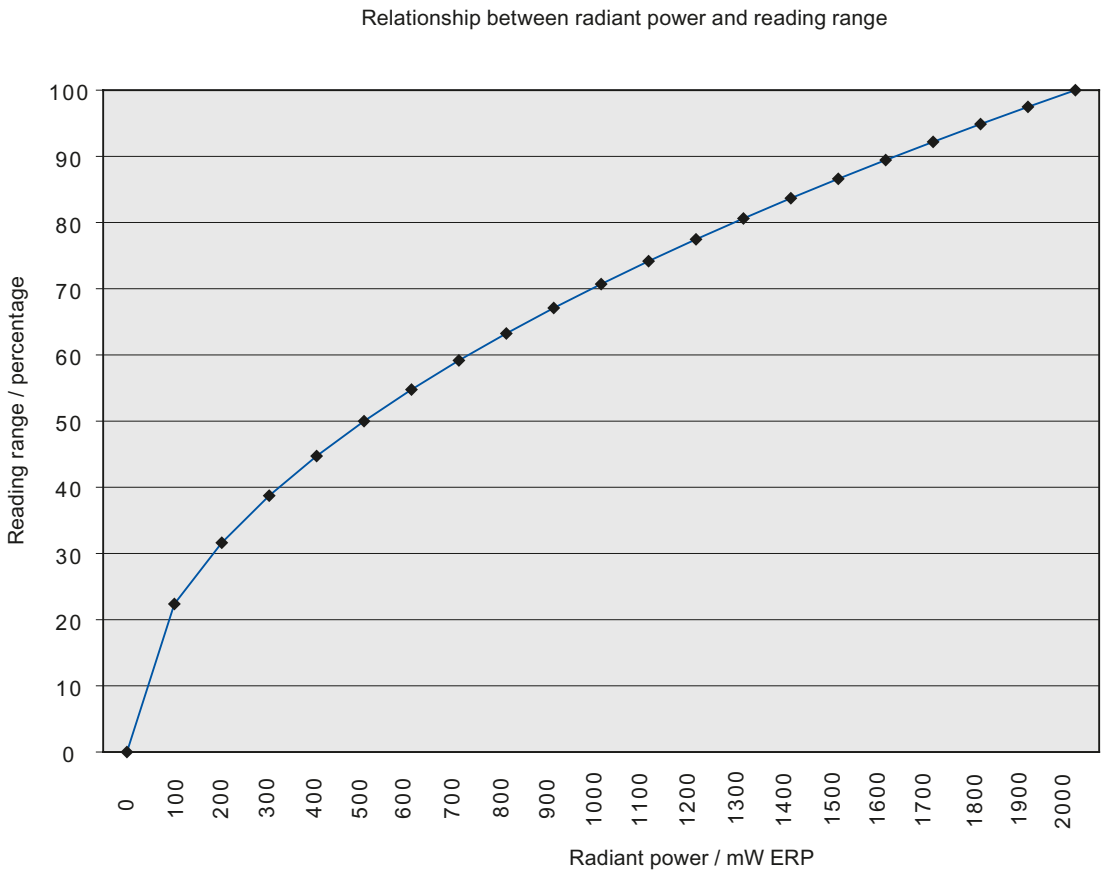

7.7.3.1 Reading range when mounted on non-metallic carriers

The RF680T transponder is a universal transponder for mounting on many different types of carrier plate materials.

Table 7- 26 Reading ranges for non-metal carriers (RF660R; 2 W ERP)

Carrier plate material	Reading range
Transponder on wooden carrier (dry, degree of moisture < 15%)	Typ. 4 m
Transponder on plastic carrier	Typ. 4 m
Transponder on glass	Typ. 4 m

100% reading range is achieved when mounted in empty, anechoic rooms.

7.7.3.2 Directional radiation pattern of the transponder on non-metallic surfaces

It is recommendable to align the transponder parallel to the transmitting antenna. If, however, the transponder including the metallic carrier plate is tilted, the reading range will be reduced.

Rotation about the polarization axis

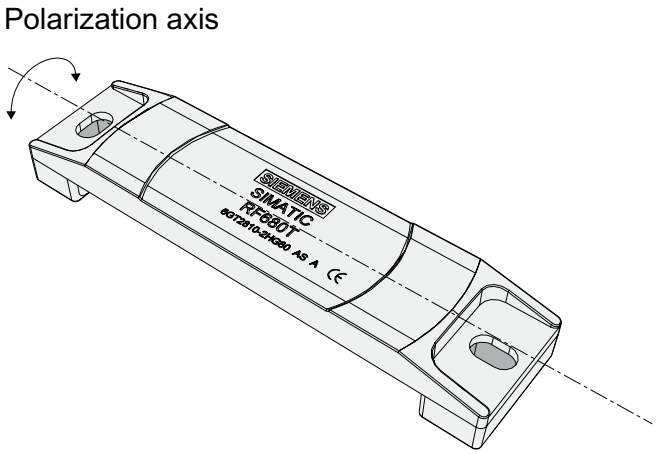

Figure 7-38 Rotation of the transponder about the polarization axis

Generally the range does not change when the transponder without carrier material is rotated about the polarization axis.

Rotation orthogonal to the polarization axis

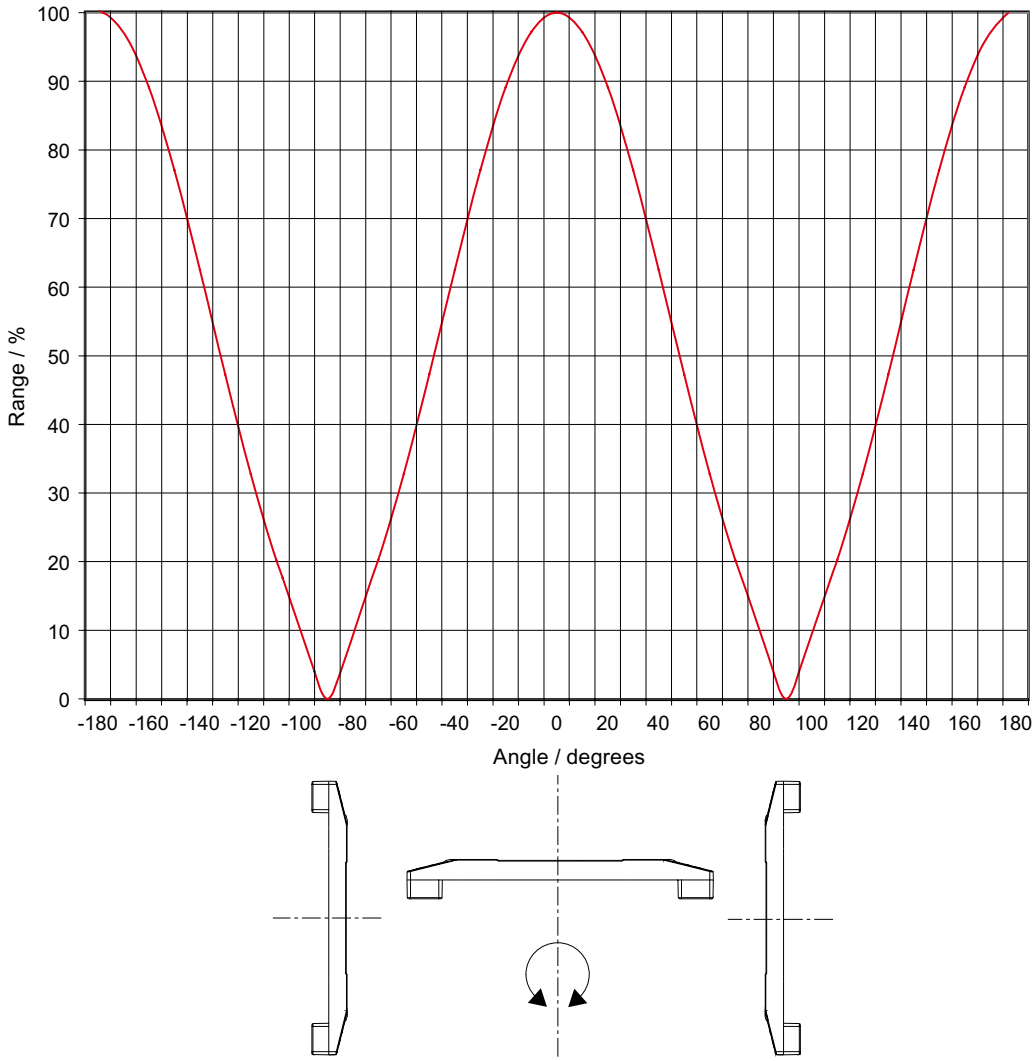

Figure 7-39 Transponder characteristics when rotated orthogonally to the polarization axis (within the tag plane)

If the transponder is positioned orthogonally to the transmitting antenna, it normally cannot be read. Therefore the transponder is preferably to be aligned parallel to the transmitting antenna. The following figure illustrates this situation.

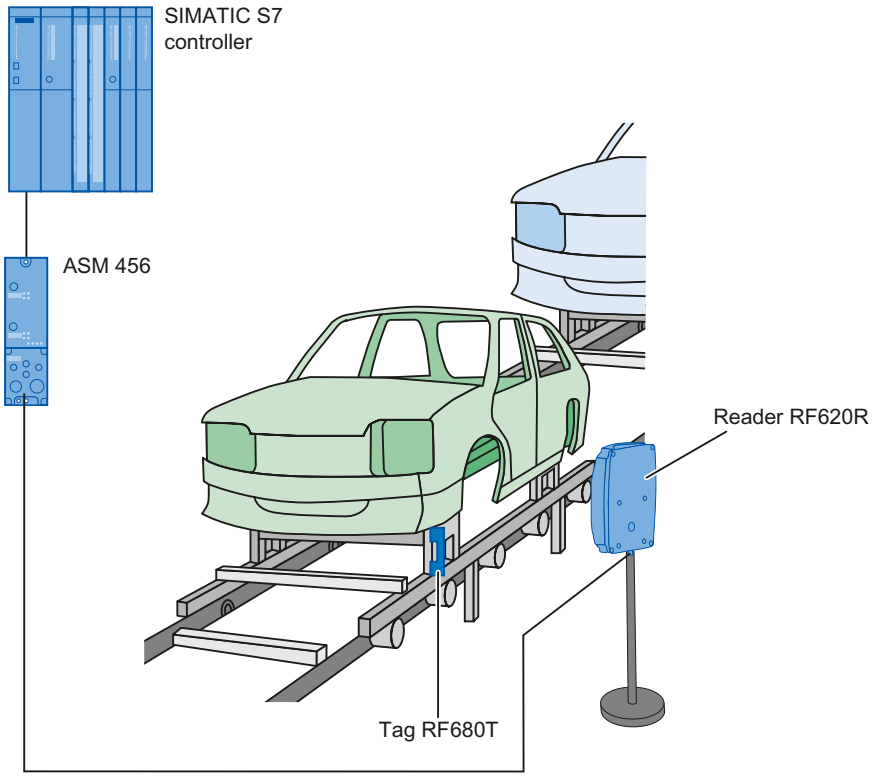

Figure 7-40 Application example

7.7.3.3 Optimum antenna/transponder positioning with plane mounting of the transponder on metal

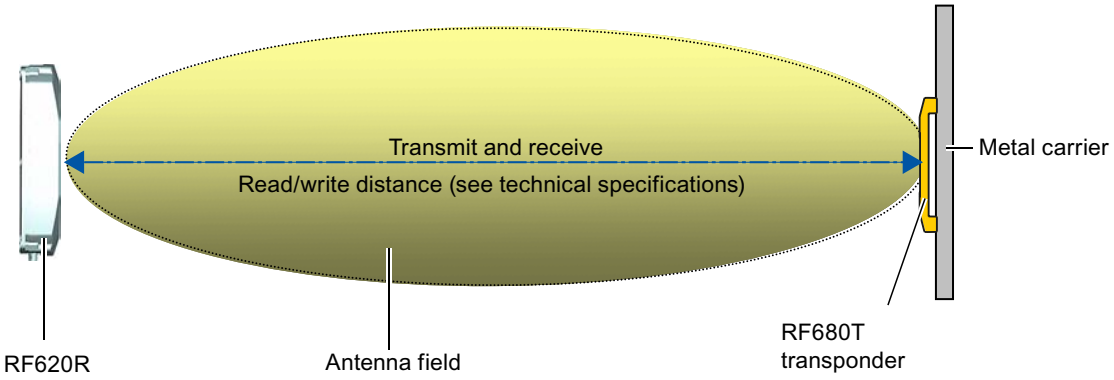

Figure 7-41 Example of optimum antenna/transponder positioning

7.7.3.4 Reading range when mounted on plane metallic carrier plates

The transponder generally has linear polarization. The polarization axis runs as shown in the diagram below. If the transponder is centrally mounted on a plane metal plate, which may either be almost square or circular, it can be aligned in any direction if the transmitting and receiving antennas operate with circular polarization (such as RF660A and RF620R).

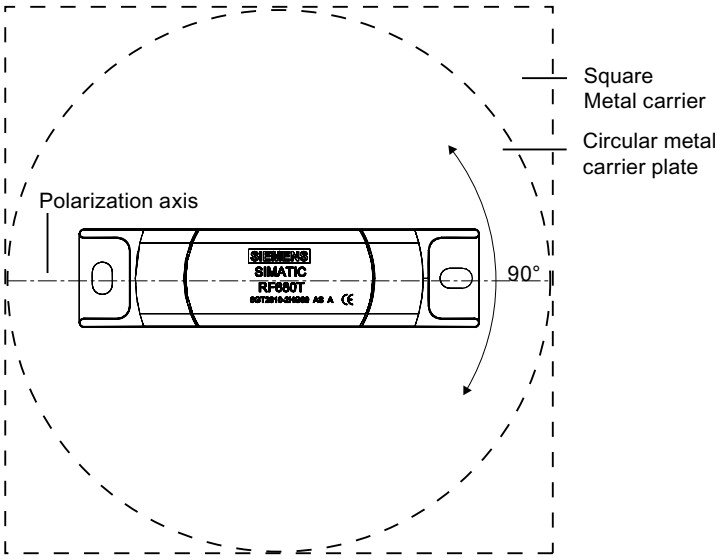

Figure 7-42 Optimum positioning of the transponder on a (square or circular) metallic carrier plate

Table 7- 27 Reading range with metallic, plane carriers with spacer

Carrier plate material	Reading range Europe	Reading range USA
Metal plate 150 x 150 mm	Typ. 4 m	Typ. 4 m

On rectangular carrier plates, the reading distance depends on the mounting orientation of the transponder A 90° rotation of the transponder about the axis of symmetry may result in greater reading distances

7.7.3.5 Influence of conducting walls on the reading range

If there are conducting walls or restrictions in the vicinity that shade the radio field, a distance of approx. 10 cm is recommended between the transponder and the wall. In principle, walls have least influence if the polarization axis is orthogonal to the conducting wall.

Reading range: One conducting wall

Influence on reading range when positioned orthogonally to the conducting wall

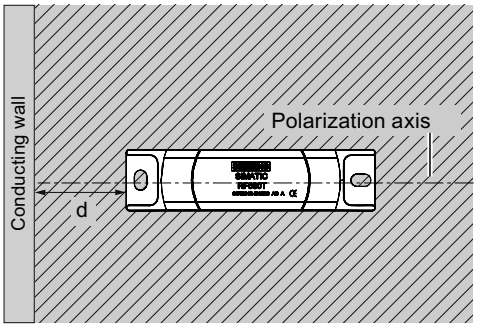

Top view

Distance d	20 mm	50 mm	100 mm	
Reading range	Approx. 100%	Approx. 100%	Approx. 100%	Wall height 20 mm
	Approx. 100%	Approx. 100%	Approx. 100%	Wall height 50 mm
	Approx. 80%	Approx. 100%	Approx. 100%	Wall height 100 mm

Influence on reading range when positioned parallel to the conducting wall

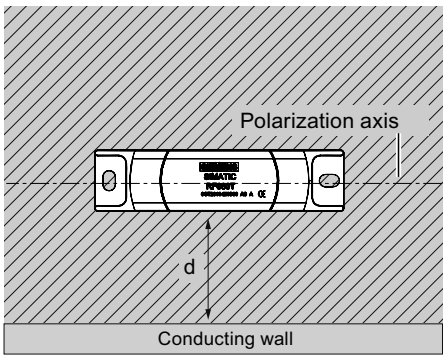

Top view

Distance d	20 mm	50 mm	100 mm	
Reading range	Approx. 50%	Approx. 70%	Approx. 90%	Wall height 20 mm
	Approx. 40%	Approx. 70%	Approx. 90%	Wall height 50 mm
	Approx. 30%	Approx. 50%	Approx. 90%	Wall height 100 mm

Reading range: Two conducting walls

Influence on reading range when positioned against two conducting walls

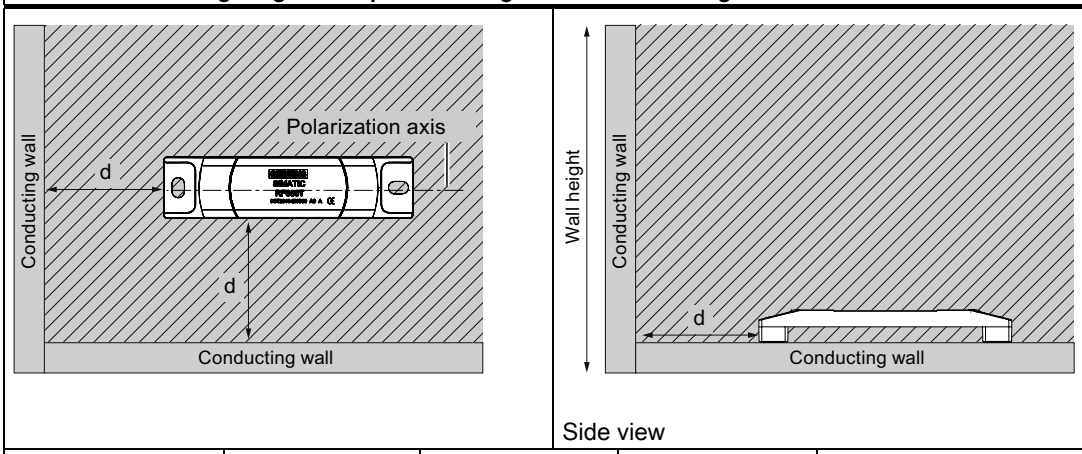

Side view

Distance d	20 mm	50 mm	100 mm	
Reading range	Approx. 50%	Approx. 70%	Approx. 90%	Wall height 20 mm
	Approx. 30%	Approx. 60%	Approx. 90%	Wall height 50 mm
	Approx. 25%	Approx. 50%	Approx. 90%	Wall height 100 mm

The values specified in the tables above are reference values.

7.7.3.6 Directional radiation pattern of the transponder on metallic surfaces

It is recommendable to align the transponder parallel to the transmitting antenna. If, however, the transponder including the metallic carrier plate is tilted, the reading range will be reduced.

Rotation about the polarization axis or orthogonal to the polarization axis

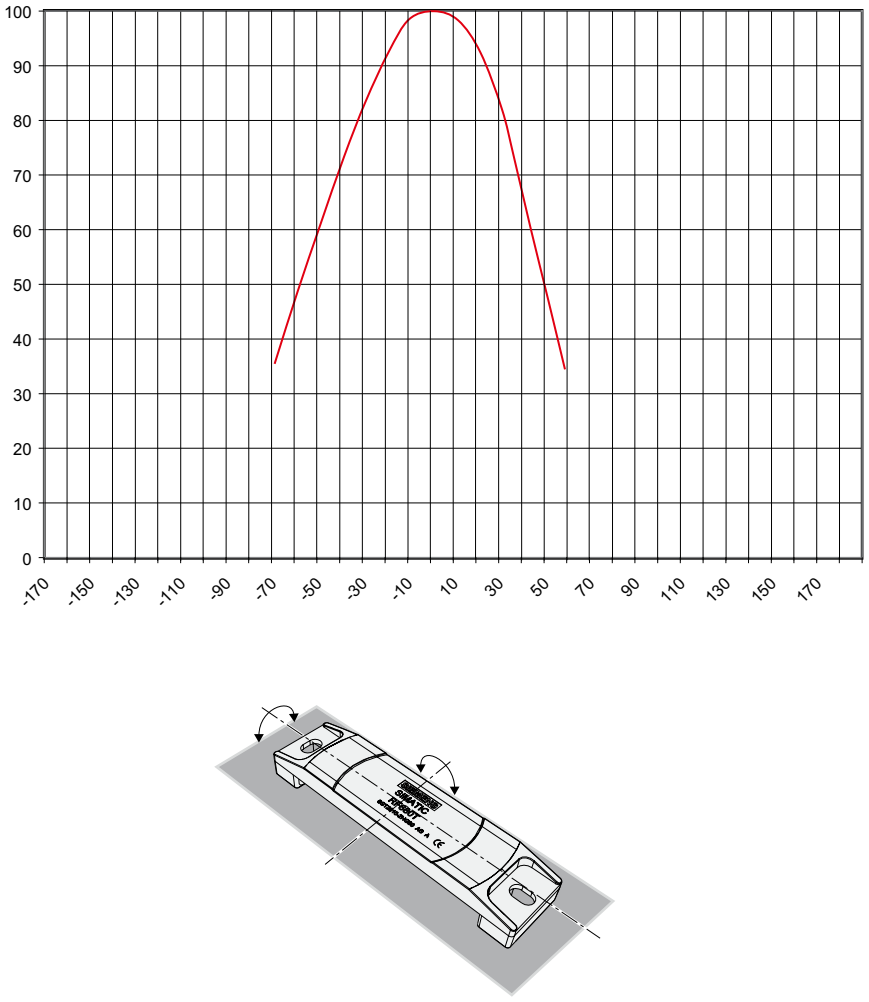

Figure 7-43 Characteristic of the transponder when rotated about the polarization axis or orthogonally to the polarization axis

Note

Please note that the directional effect is dependent on the size of the metal surface. The larger the metal surface, the larger the directional effect.

7.7.4 Mounting instructions

Mount the SIMATIC RF680T transponder on the base using two M6 screws.

Figure 7-44 Mounting SIMATIC RF680T

Properties	Description
Type of mounting	M6 screw mounting
Tightening torque (at room temperature)	≤ 1 Nm (Note the expansion coefficients of the materials used at high temperatures!)

NOTICE
Reduction of the read/write distance When mounting on metal or conductive material, ensure that the space below the transponder remains empty.

7.7.5 Memory configuration

SIMATIC memory configuration

The following graphic shows the structure of the virtual SIMATIC memory for the RF620R/RF630R reader and explains the function of the individual memory areas. The SIMATIC memory configuration is based on the 4 memory banks, as they are defined in EPC Global.

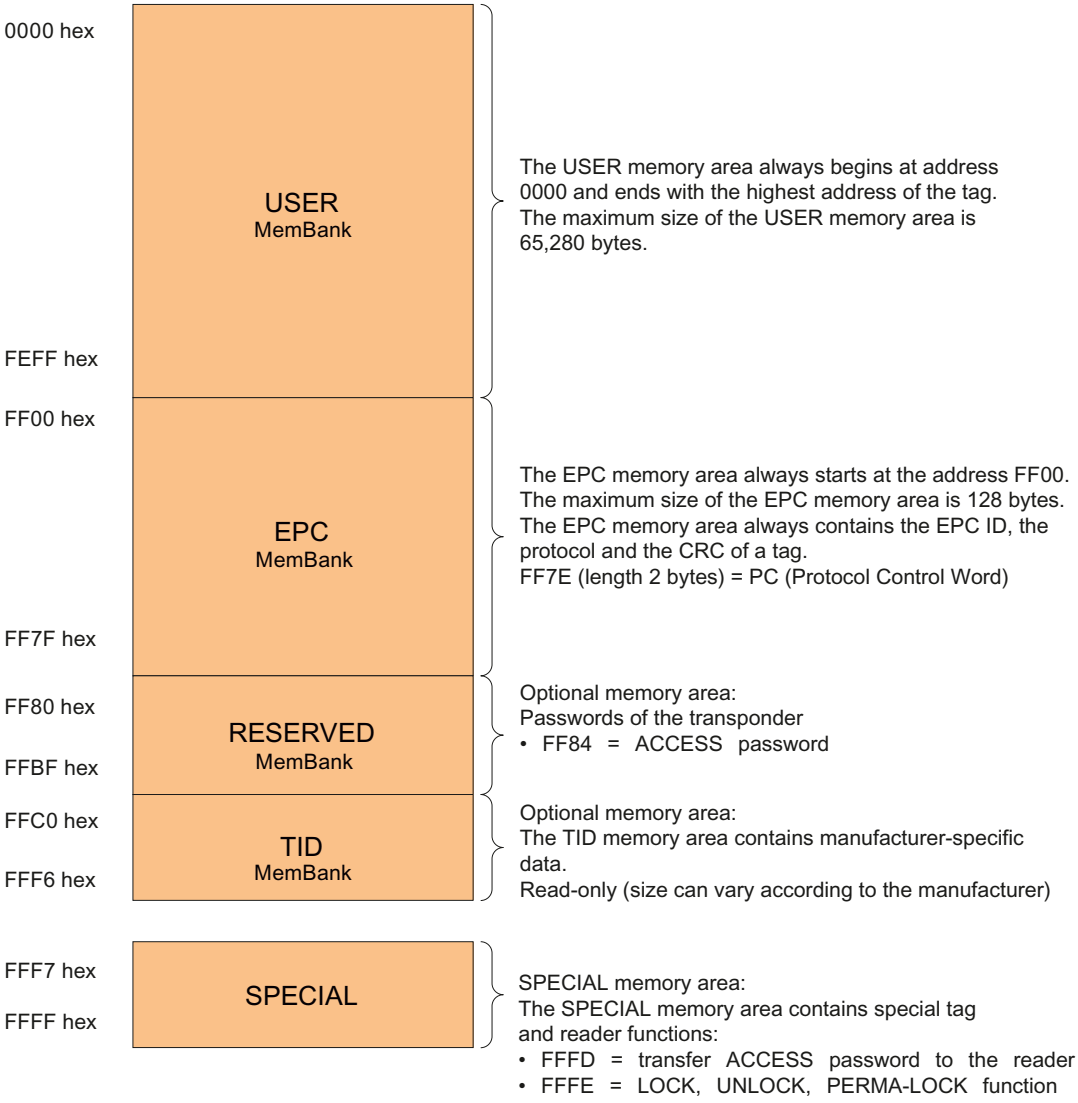

Figure 7-45 SIMATIC memory model

RF680T memory configuration

Tag	User [hex]	EPC		TID	RESERVED (passwords)	Special	
		Range	Access			KILL-PW	Lock function
RF680T	00 - 3F	FF00-FF0B (240 bit = FF00-FF1D)	read/ write	FFC0-FFC7	FF80-FF87	Locked	Yes

Memory banks

The memory of the ISO 18000-6C G2XM chip is logically divided into four different memory banks:

Memory bank (decimal)	Memory type	Description
MemBank 11_2	USER	User-writable USER memory area
MemBank 10_2	TID	Is defined by the manufacturer, contains the class identifier and serial number of a tag
MemBank 01_2	EPC	Contains the EPC data, the protocol information and the CRC data of a tag. You can write to the EPC memory area. In the delivery condition, the memory contents can have the following states: • containing the same data • containing different data
MemBank 00_2	RESERVED	Contains the access password.

The graphic below illustrates the exact memory utilization: Each box in the right part of the graphic represents one word (16 bit) in the memory.

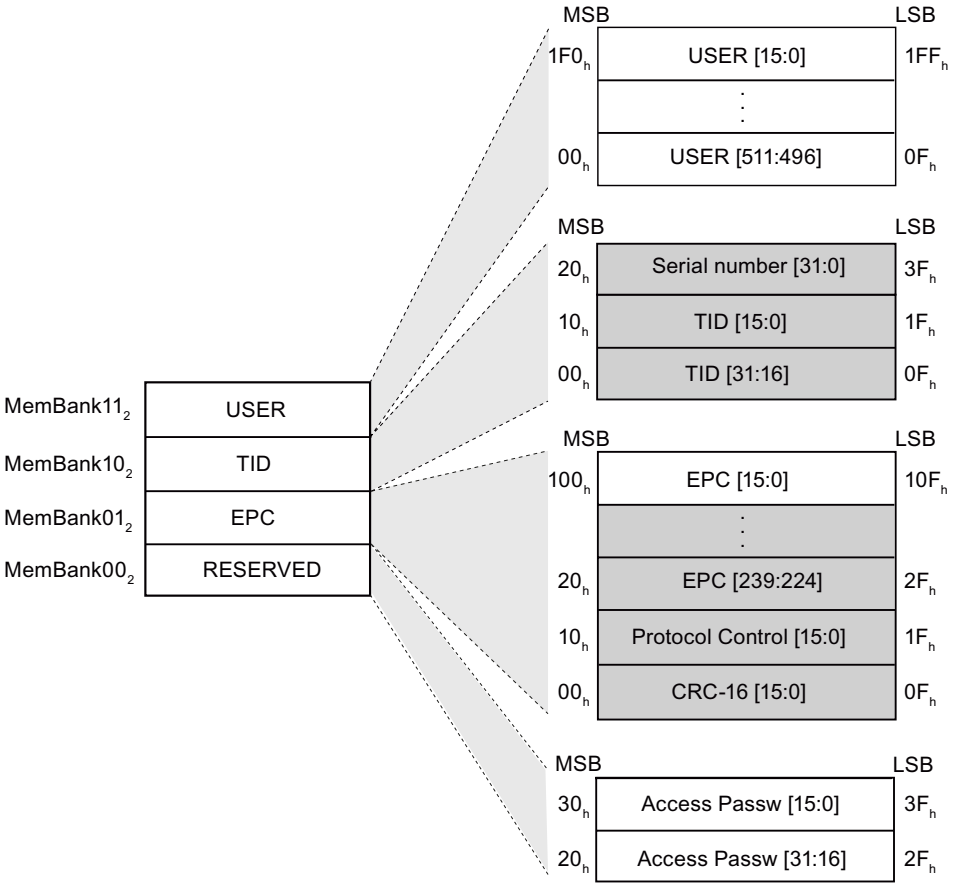

Color	Access by SIMATIC RF660R / SIMATIC RF610M
	Read
	Write / read

Figure 7-46 Memory utilization

Reading and writing of the memory is described in the manuals for the respective readers.

7.7.6 Technical specifications

7.7.6.1 Mechanical data

Property	Description
Dimensions (L x W x H)	130 x 32 x 15 mm
Design	Plastic housing (PPS)
Housing color	Black
Weight	Approx. 50 g
Mounting on metal	Yes

7.7.6.2 Electrical data

Property	Description	
	Europe	USA / Canada
Air interface	According to ISO 18 000-6 C	
Frequency range	865 … 868 MHz	915 ... 928 MHz
Necessary[2] transmit power	2 W (ERP)	4 W (EIRP)
Read distance • on non-metallic carriers • On metal[1]	 • Typ. 4 m • Typ. 4 m	
Write distance • on non-metallic carriers • On metal[1]	 • Typ. 3 m • Typ. 3 m	
Polarization type	Linear	
Minimum distance to transmitting antenna	Approx. 0.2 m	
Energy source	Magnetic energy via antenna, without battery	
Multi-tag capability	Yes, minimum distance between transponders ≥ 50 mm [3]	

1) Plane metal surface 15 x 15 cm, reduction of range to about 70% at the band limit 928 MHz on metal surfaces; detection is guaranteed at 915 MHz due to frequency hopping procedure.

2) For maximum read/write distances at room temperature

3) When the minimum distances are not reached, there is a reduction in the maximum read and write distances of the transponders.

7.7.6.3 Memory specifications

Property	Description
Type	EPC Class 1 Gen2
Memory organization	96 bits/240 bits EPC code
Protocol	ISO 18000-6C
Data retention time	10 years
Read cycles	Unlimited
Write cycles	Typ. 1,000,000 (at +40 °C)

7.7.6.4 Environmental conditions

Property		Description	
Ambient temperature	• Operation	-25 °C to +100 °C	Permanent
		From 100 °C to +140 °C	20% reduction in the limit distance
		+200 °C [2]	Tested up to 5000 hours or 3000 cycles
		+220 °C	Tested up to 2000 hours or 1500 cycles
	• Transport and storage	-40 °C to +100 °C	
Shock Vibration compliant with EN 60721-3-7 Class 7 M3		50 g, [1] 20 g [1]	
Torsion and bending load		Not permissible	
Degree of protection		• IP 68 according to EN 60529: (45 minutes immersion in water; water depth 1 m from top edge of housing at +20 °C) • IPx9K (steam jet: 150 mm; 10 to 15 l/min; 100 bar; 75 °C)	
Silicone-free		Yes	
MTBF		$1{,}6 \cdot 10^7$ h	

[1] The values for shock and vibration are maximum values and must not be applied continuously.

[2] Note that no processing is possible at temperatures of +140 °C or higher.

7.7.6.5 Chemical resistance of the RF680T transponder

The following table provides an overview of the chemical resistance of the data memory made of polypropylene sulfide.

	20 °C	65 °C
Ammonia, w. conc.	○	-
Butane gas	+	+
Butyl acetate (acetic acid butyl ester)	+	+
Calcium chloride	+	+
Chlorine	-	-
Chrome baths, tech.	-	-
Acetic acid, w. 10%	+	+
Ethyl alcohol, w., undenaturated	+	+
Formaldehyde	+	+
Isopropanol	+	+
Methyl alcohol	+	+
Lactic acid, w.	+	+
Sodium carbonate, w. (soda)	+	+
Sodium chloride, w.	+	+
Sodium hydroxide 10%	+	+
Nitrobenzol	○	-
Phosphoric acid	-	-
Propane	+	+
Nitric acid 10%	-	-
Hydrochloric acid 10%	-	-
Sulfur dioxide, minimal	+	+
Sulfuric acid 25%	-	-
Hydrogen sulfide, dry	+	+
Carbon tetrachloride	○	-

Abbreviations	
+	Resistant
○	Limited resistance
−	Not resistant

7.7.7 Certificates and approvals

Table 7- 28 6GT2810-2HG80 - RF680T Gen 2 UHF- Europe

Certificate	Description
CE	Conformity with R&TTE directive

Table 7- 29 6GT2810-2HG80- RF680T Gen 2 UHF- USA / Canada

Standard	
FCC Federal Communications Commission	Passive labels or transponders comply with the valid regulations; certification is not required

7.7.8 Dimension drawing

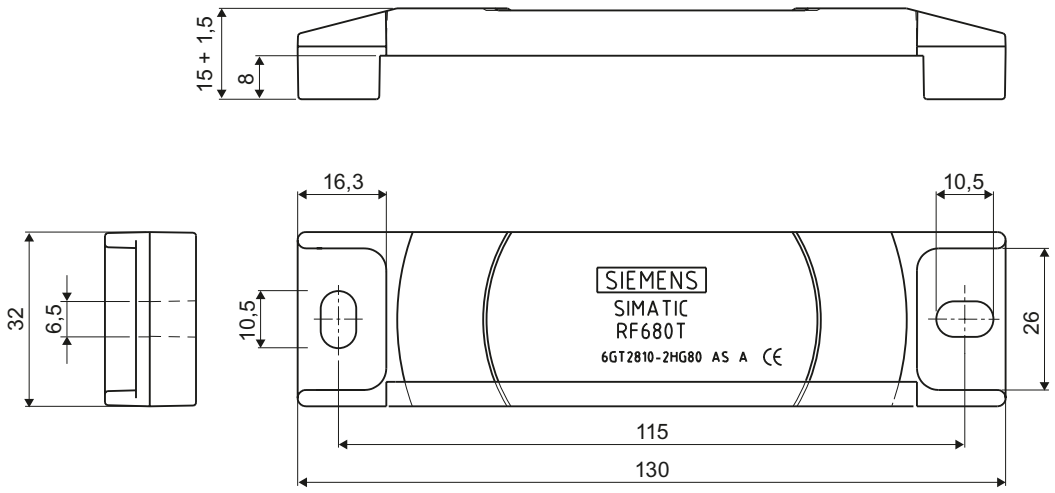

Figure 7-47 Dimension drawing of SIMATIC RF680T

Units of measurement: All dimensions in mm

Tolerances, unless indicated otherwise, are +-0.5 mm.

Integration into networks

8

8.1 Integration in IT networks

8.1.1 RF660R

The RF660R reader is directly connected to higher-level systems via TCP/IP.

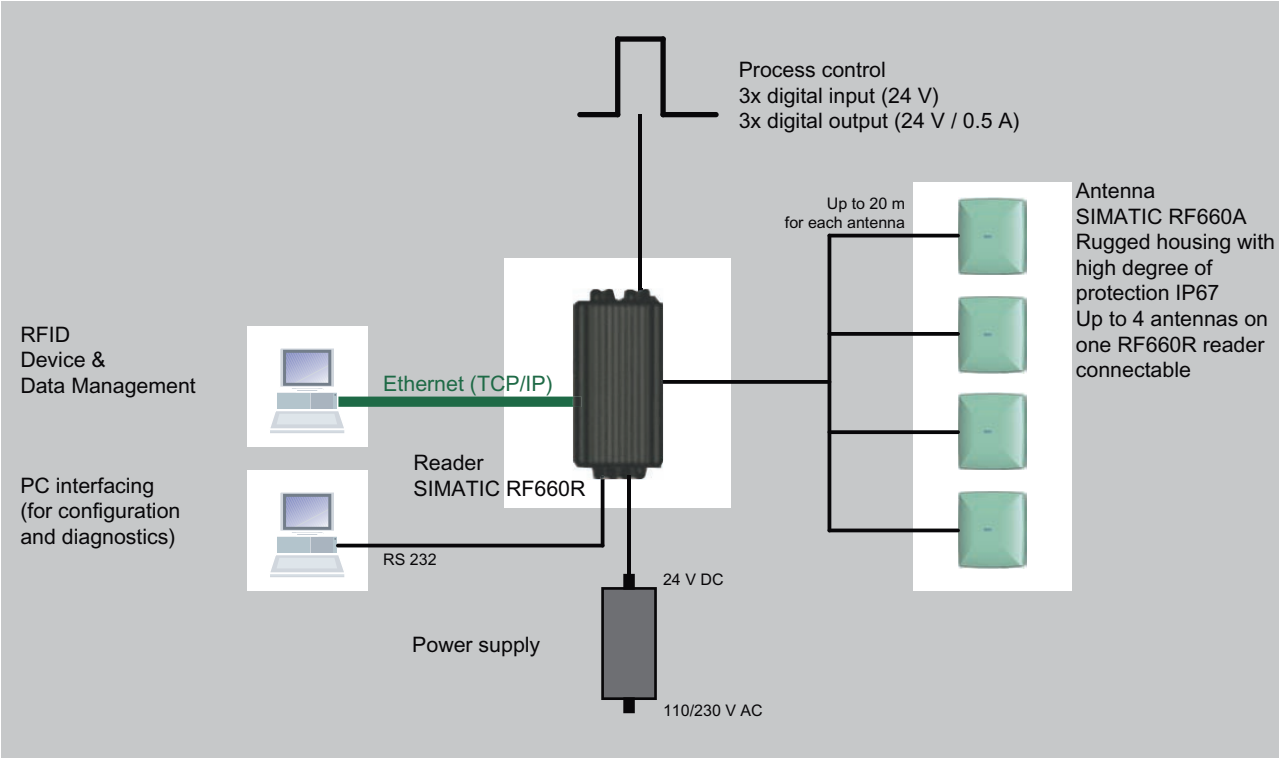

Figure 8-1 Configuration overview of the RF660R reader

8.1.2 Configuration of RF660R via XML

If you want to create your own applications for the RF660R reader, you can do this using the XML-based interface of the reader. For detailed information on configuring the reader using XML commands, please refer to the Function Manual "SIMATIC RF660R XML Interface".

8.1.3 RF-MANAGER and PC integration of the RF620R/RF630R and RF660R readers

Fields of application

The RF-MANAGER is used for configuring, commissioning and operating RFID systems. It allows you to collect RFID data, to process it and to filter it. This data can be exchanged with an S7 PLC by means of variables or transferred to a higher-level management system.

The RF-MANAGER supports you with quick and easy creation of RFID solutions as well as the administration of RFID systems and their hardware components. The application also offers extensive help with the preprocessing of RFID data.

8.1.3.1 Tasks of RF-MANAGER

Tasks of RF-MANAGER

At both the planning level (ERP) and production level (MES), systems are used that generate a large volume of information that is relevant to production or that has commercial relevance. To increase productivity and efficiency, the individual levels must communicate with each other to use all the information that is available optimally. The RF-MANAGER makes an important contribution to this and is located at the PLC/PC level. It manages the connected RFID readers, collects the supplied data and reduces them to the accuracy and quantity required by the MES/ERP level. The most important areas are device management, data management and business integration. RF-MANAGER also acts as the interface between RFID data and the MES/ERP level.

The current RF-MANAGER version supports the following readers of the SIMATIC RF600 system: RF610M, RF620R, RF630R, RF660R.

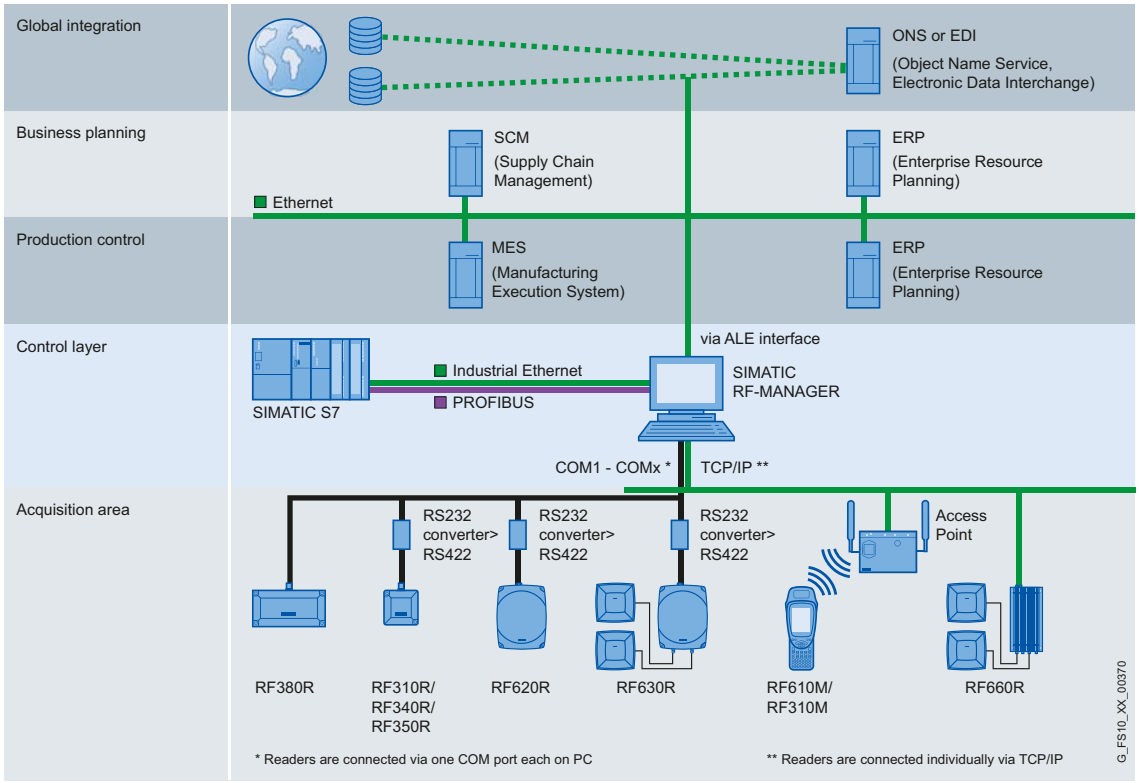

Figure 8-2 System overview

Properties of RF-MANAGER

RF-MANAGER is characterized by the following features:

- Smooth operation and simple diagnostics
- Preparation of data for higher-level systems
- Logical operations on RFID data with automation data (SIMATIC S7):
  the connection between RF-MANAGER and the RF660R reader supports interfacing to higher-level controllers.
- Flexibility with the higher-level system
- Comprehensive investment security

8.1.3.2 RF-MANAGER components

The RF-MANAGER comprises the following components:

- RF-MANAGER Engineering System (ES)
- RF-MANAGER Runtime (RT)

RF-MANAGER Engineering System (ES)

The RF-MANAGER Engineering System is the software for handling all your essential configuring tasks. You can use ES to create RFID projects on your PC and to parameterize their components.

RF-MANAGER Runtime (RT)

RF-MANAGER Runtime is the software that is used to operate RFID systems. In Runtime, you can execute the RFID projects during process operation that you created and parameterized in the Engineering System. The RT software can run either on the same PC as the ES, or on another Windows XP-PC of your choice. Other options for the runtime system are the SIMATIC Microbox PC 420 and the SIMATIC Microbox PC 427B. The runtime system can exchange data with an S7 PLC by means of variables.
In accordance with the product version or licensing of RF-MANAGER that you have selected, you can use the runtime system to address up to 50 RFID readers. Later license extensions for the Runtime software can also be obtained.

8.1.3.3 Hardware and system requirements for RF620R/RF630R operation

- SIMATIC RF-MANAGER SP1
- PC with a serial interface
- RS422/RS232 interface converter

8.1.3.4 Connecting principle

- The RF660R UHF reader is connected to the PC via TCP/IP or RS232.
- The RF620R and RF630R UHF readers are connected to the PC serially via a COM interface. For this an RS232 to RS422 interface converter is needed.
- The RF610M mobile handheld terminal is connected to the RF-MANAGER via WLAN.

Tested interface converters for the operation of RF620R/RF630R

The following interface converters were used by Siemens in the test:

- Trycom IP interface converter: "TRP-C06".
- EXSYS GmbH interface converter card: "EX-42054-9-8S" with 8 interfaces.
- EXSYS GmbH interface converter card: "EX-42052-9-2S" with 2 interfaces.

Interface converters that do not work with RS232 but are connected to the PC via, for example, Ethernet or USB are not recommended. In general, these do not meet the timing requirements demanded by the protocol.

When using an interface converter, the following pin assignment should be observed.

8.1.3.5 Pin assignment for TRP-C06 interface converter

Pin assignment and wiring diagram for interface converter

Trycom IP interface converter: "TRP-C06" is an external unit to convert RS232 to RS422 and vice versa. To commission the interface converter, connect the wires of the reader cable (Order No. 6GT2891-0EH50) to the correct terminals on the interface converter and the power supply/ground (GND).

The following graphic shows an example of a wiring diagram:

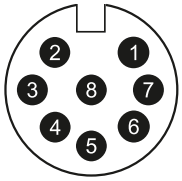

PIN	Color	Assignment
1	White	+ DC 24 V
2	Brown	TX neg
3	Green	GND
4	Yellow	TX pos
5	Gray	RX pos
6	Pink	RX neg
7	Blue	Unassigned
8	Red	Ground (shield)

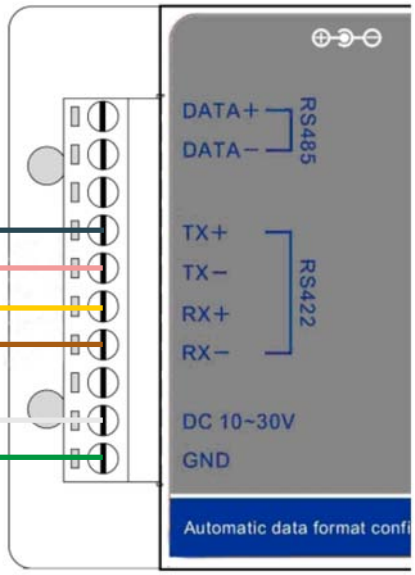

Figure 8-3 TRP-C06 wiring diagram

8.1.3.6 Pin assignment connector EX-42054-9-8S interface converter card

The interface converter card EX-42054-9-8S is installed in the PC. A driver is installed for each interface so that 8 additional COM ports become available. A connector matching the 8 interfaces must be mounted on the reader cable.

The following figure gives an example of a pin assignment for a connector on an RS422 reader cable (Order No. 6GT2891-0EH50) as well as the power supply for the reader:

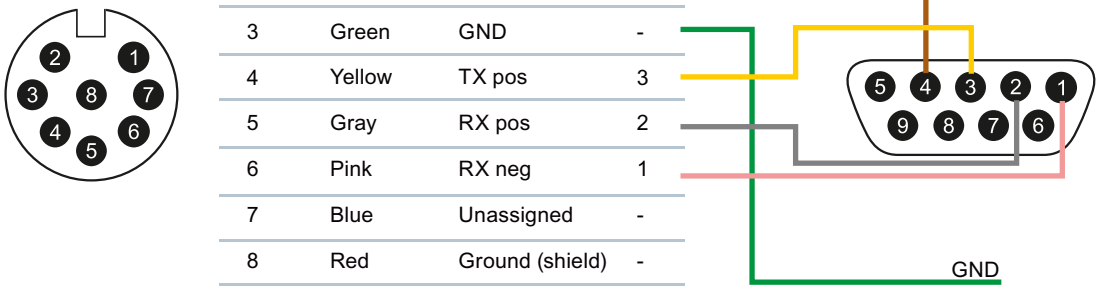

PIN	Color	Assignment	PIN
1	White	DC 24 V	-
2	Brown	TX neg	4
3	Green	GND	-
4	Yellow	TX pos	3
5	Gray	RX pos	2
6	Pink	RX neg	1
7	Blue	Unassigned	-
8	Red	Ground (shield)	-

Figure 8-4 Connector pin assignment EX-42054-9-8S and reader power supply

Note

Same pin assignment for the interface converter card EX-42052-9-2S

For the interface converter card EX-42052-9-2S a connector with the same assignment as shown above must be installed.

8.1.3.7 Number of readers

The maximum number of readers connected simultaneously to a single computer with serial communications depends largely on the computer's performance.

In the system test a standard PC (see system requirements) with 8 readers was tested. Insufficient computer performance can lead to connection interruptions or communication errors.

On the Microbox with a serial interface, a reader with serial communications was tested.

8.1.3.8 Set parameters

In the following screenshot, the parameters of the readers that are now supported due to the Service Pack can be set:

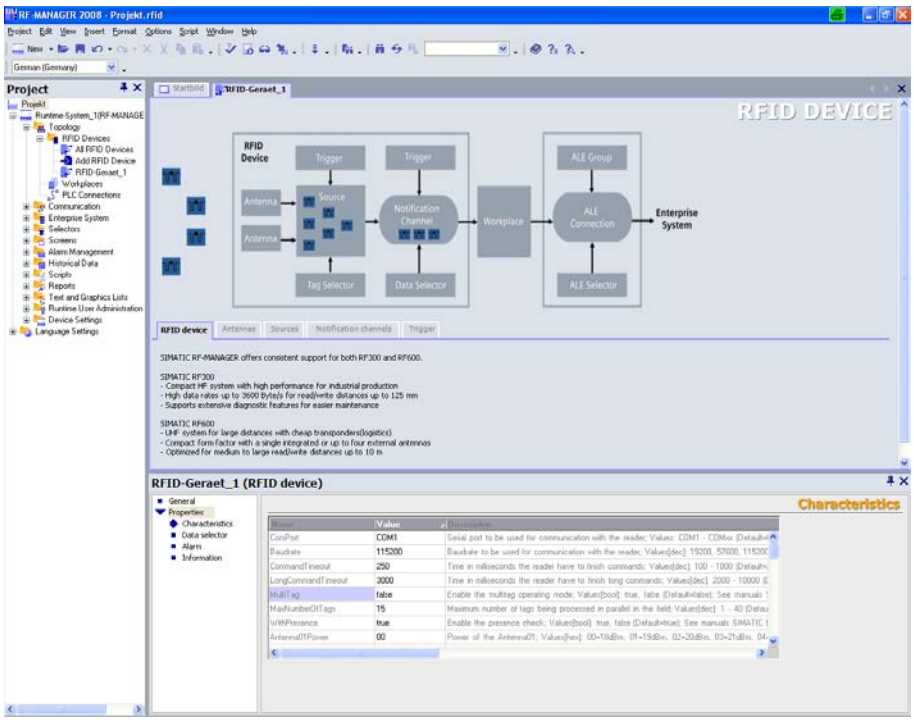

Figure 8-5 Setting reader parameters

The parameters are entered in plain text form. The parameters in the Engineering System are not language-dependent. The parameters and their possible values are shown below. Please note that not all parameters are available to all readers.

Further information on the meaning of the parameters can be found in the "RF620R/RF630R" parameterization manual.

Parameters for RF600 system readers

Parameter	Value range	Default	Description
ComPort	COM1 ... COMxx	COM1	Serial interface to be used for communication with the reader.
Baudrate	Decimal value: 19200, 57600, 115200	115200	Baud rate to be used for communication with the reader.
CommandTimeout	Decimal value: 100 ... 1000	250	Time in milliseconds in which the reader must process commands.
LongCommandTimeout	Decimal value: 2000 ... 10000	3000	Time in milliseconds in which the reader must process long commands.
MultiTag	Boolean value: true or false	false	Activates MultiTag mode, see MOBY manuals, parameter "MOBY_mode" **The release of operation in MultiTag mode will follow at a later time.** More information can be found on the Service&Support pages (www.siemens.com/automation/service&support) on the Internet.
MaxNumberofTags	Decimal value: 1 ... 40	15	Maximum number of tags in the field that can be processed in parallel. See MOBY manuals, parameter "Multitag"
WithPresence	Boolean value: true or false	true	Activates presence control, see MOBY manuals, parameter "MDS_control"
Antenna01Power	Hexadecimal value: 00 ... 0F	00	Performance of Antenna 01 0 ≙ 18 dBm (65 mW) 1 ≙ 19 dBm (80 mW) ... 9 ≙ 27 dBm A(...F) ≙ 27 dBm (500 mW)
Antenna02Power	Hexadecimal value: 00 ... 0F	00	Performance of Antenna 02 0 ≙ 18 dBm (65 mW) 1 ≙ 19 dBm (80 mW) ... 9 ≙ 27 dBm A(...F) ≙ 27 dBm (500 mW)
RadioProfile	Hexadecimal value: 01 ... 05	01	Radio profile according to EPC Global 00 hex = no standard selected • 01 hex = autodetect: Default profile depending on reader type (ETSI, FCC) For ETSI readers: ETSI new: EU, EFTA, and Turkey ETSI EN 302 208 V1.2.1 (4-channel plan) • 02 hex = ETSI new: EU, EFTA, and Turkey correspond to the standard ETSI EN 302 208 V1.2.1 (4-channel plan) • 03 hex = ETSI old: EU, EFTA, and Turkey correspond to the standard ETSI EN 302 208 V1.1.2 • 04 hex = FCC (e.g. USA, Canada) • 05 hex = China

Parameter	Value range	Default	Description
Channels	Hexadecimal value: 00 ... 0F	00 (all channels on)	Defines the active channel • Bit 0=865.7 MHz • Bit 1=866.3 MHz • Bit 2=866.9 MHz • Bit 3=867.5 MHz See MOBY manuals, parameter "field_ON_time"
ResetofLeds	Boolean value: true or false	true	Activates restart of the ERR-LED, see MOBY manuals, parameter "option_1"
HeartBeatInterval	1000 ... 20000	2000	Time in milliseconds in which the heartbeat is sent to the reader.
field_ON_control	Hexadecimal value	02	Expert settings for air interface, see MOBY manuals, parameter "field_ON_control"

Note

For the newly supported readers, the antenna performance must be set in the properties table. The value under the antenna tab is not relevant.

In general, in the overview of all readers many properties are shown that are only relevant for the RF660R and RF610M readers. Properties of the newly supported readers that cannot be set are ignored.

8.1.3.9 Operating modes

The following operating modes are supported:

- Single tag without presence
  Continuous cyclic reading from the RF-MANAGER takes place.
- Single tag with presence
  Cyclic reading from the RF-MANAGER only takes place after a reader presence message has been received.
- MultiTag without presence (only RF620R/RF630R)
  Continuous cyclic reading from the RF-MANAGER takes place.
- MultiTag with presence (only RF620R/RF630R)
  Cyclic reading from the RF-MANAGER only takes place after a reader presence message has been received.

The release of operation in MultiTag mode for the RF620R/RF630R will follow at a later time.
More information can be found on the Service&Support pages (www.siemens.com/automation/service&support) on the Internet.

Note

The activation of the operating mode with presence (WithPresence = true) causes commands to be sent only to the reader if at least one tag is in the field.

In addition the presence is made available in the form of a virtual input (as InPort00). To be able to evaluate the presence in the application, this input can be addressed as a variable. Likewise, the input can be used to set a trigger. If a trigger of type "IO edge" or "I/O level" is linked to this input, the activation is dependent on presence.

Examples: With the "IO edge" type, as soon as a tag enters the field, a single read process is initiated. With the "IO level" type, reading takes place as long as a tag is in the field.

8.1.3.10 Supported tag types

RF600 reader

All the tags released for the RF600 readers (RF660R, RF620R, RF630R) are supported by RF-MANAGER.

Check back regularly at the Siemens Service&Support site (www.siemens.com/automation/service&support) in the intranet to find out if new tag types have been released for the readers.

8.1.3.11 Constraints

Operating modes

The following constraints apply with regard to operating modes:

Note

Constraints

The release of operation in MultiTag mode for the RF620R/RF630R will follow at a later time. More information can be found on the Service&Support pages (www.siemens.com/automation/service&support) on the Internet.

The "Repeat command" and "Command chaining" options are also not supported.

Further restrictions

In the Engineering System and in the configuration display in Runtime, the following special characters may not be used:

< > & „ “ `

8.2 Integration in SIMATIC networks

RF620R/RF630R

RF620R and RF630R readers are connected to the controller via the following adapter/communication modules:

- SIMATIC RF170C
- SIMATIC RF180C
- ASM 456

The RF182C communication module is connected with the PC directly over Ethernet.

Function blocks, interface modules/communication modules and readers

Table 8- 1 Table of reader/interface modules

Function blocks	Interface modules/communication modules				
	ASM 456 [1]	RF170C [1]	RF180C	RF182C	ASM 475
FB 45	1 - 2 readers	1 - 2 readers	1 - 2 readers	N/A	Not released
FC 55	1 - 2 readers	1 - 2 readers [2]	N/A	N/A	Not released
XML	N/A	N/A	N/A	1 - 2 readers	N/A

For all possible combinations, the following restriction applies:

- The input voltage at the communication module is 21.6 V - 30 V

[1]) If 2 readers are used on one ASM, the following additional restrictions apply:

- The maximum operating temperature is 35 °C (ASM 456)
- The maximum operating temperature is 55 °C (RF170C)

[2]) No operation is possible with a PROFINET head.

Interface modules/communication modules and function blocks

Table 8- 2 Overview of interface modules/communication modules

ASM/CM	Interfaces to the application (PLC)	Interfaces to the reader	Function blocks	Reader connections	Dimensions (W x H x D) in mm	Temperature range	Degree of protection
ASM 456	PROFIBUS DP-V1	2 x 8-pin connection socket, M12	FB 45 FC 55	2 (parallel)	60 x 210 x 54 or 79	0 to +55 °C	IP 67
SIMATIC RF170C	PROFIBUS DP-V1 PROFINET IO	2 x 8-pin connection socket, M12	FB 45 FC 55	2 (parallel)	90 x 130 x 60	-25 to +55 °C	IP 67
SIMATIC RF180C	PROFINET IO	2 x 8-pin connection socket, M12	FB 45	2 (parallel)	60 x 210 54	0 to +60 °C	IP 67
SIMATIC RF182C	PROFINET IO	2 x 8-pin connection socket, M12	-	2 (parallel)	60 x 210 x 54	0 to +60 °C	IP 67

The following table shows which readers can be connected to which interface modules/communication modules.

Configuration with SIMATIC RF170C

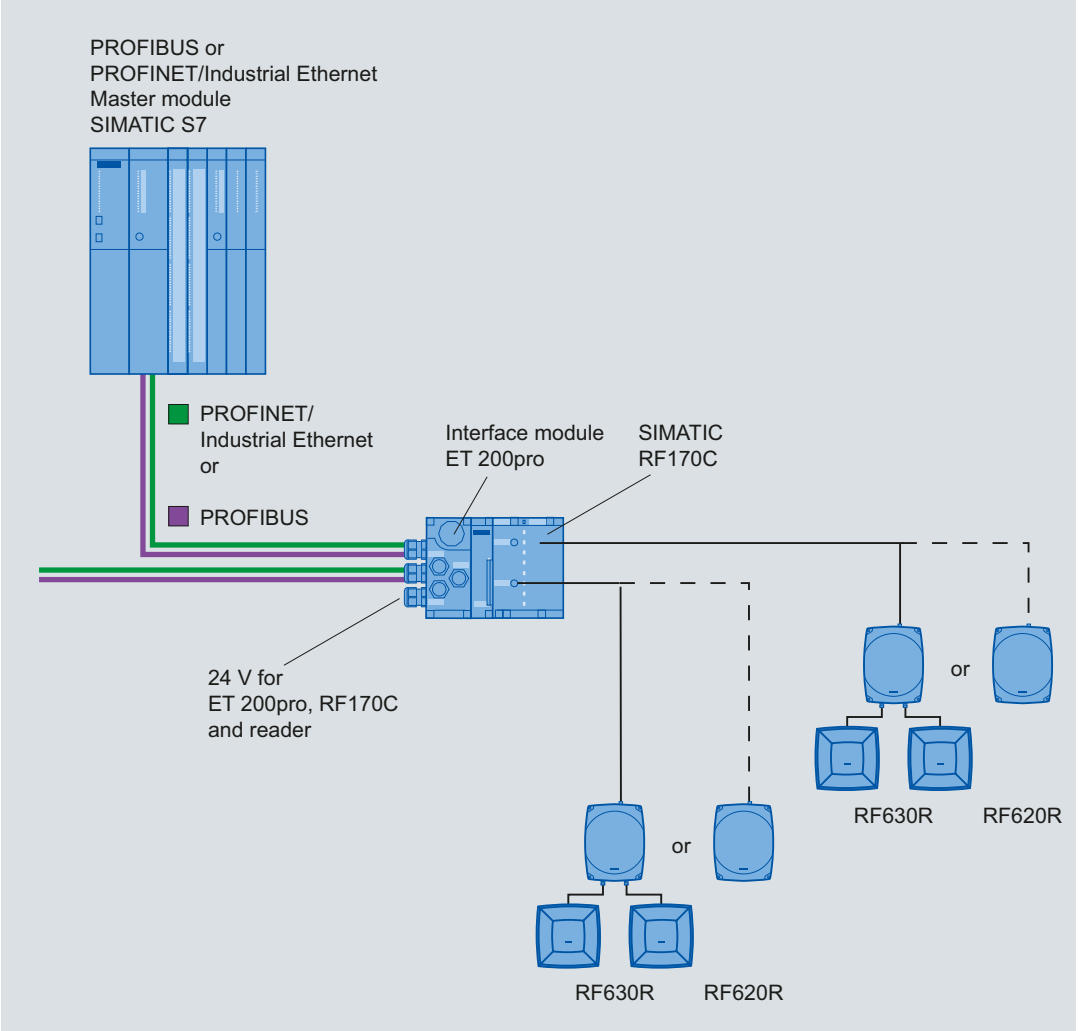

Figure 8-6 Configuration with SIMATIC RF170C

For more detailed information, please refer to SIMATIC RF170C Operating Instructions (http://support.automation.siemens.com/WW/view/de/32622825).

Configuration with SIMATIC RF180C

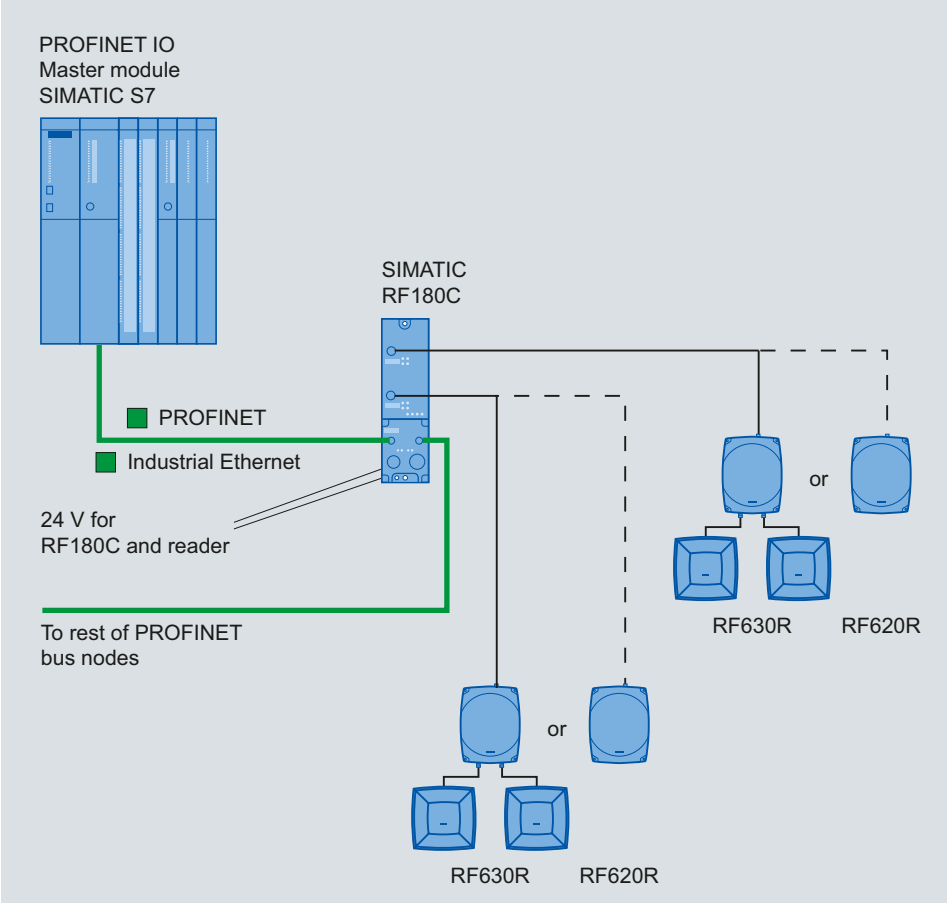

Figure 8-7 Configuration with SIMATIC RF180C

For more detailed information, please refer to SIMATIC RF180C Operating Instructions (http://support.automation.siemens.com/WW/view/en/30012157).

Configuration with ASM 456

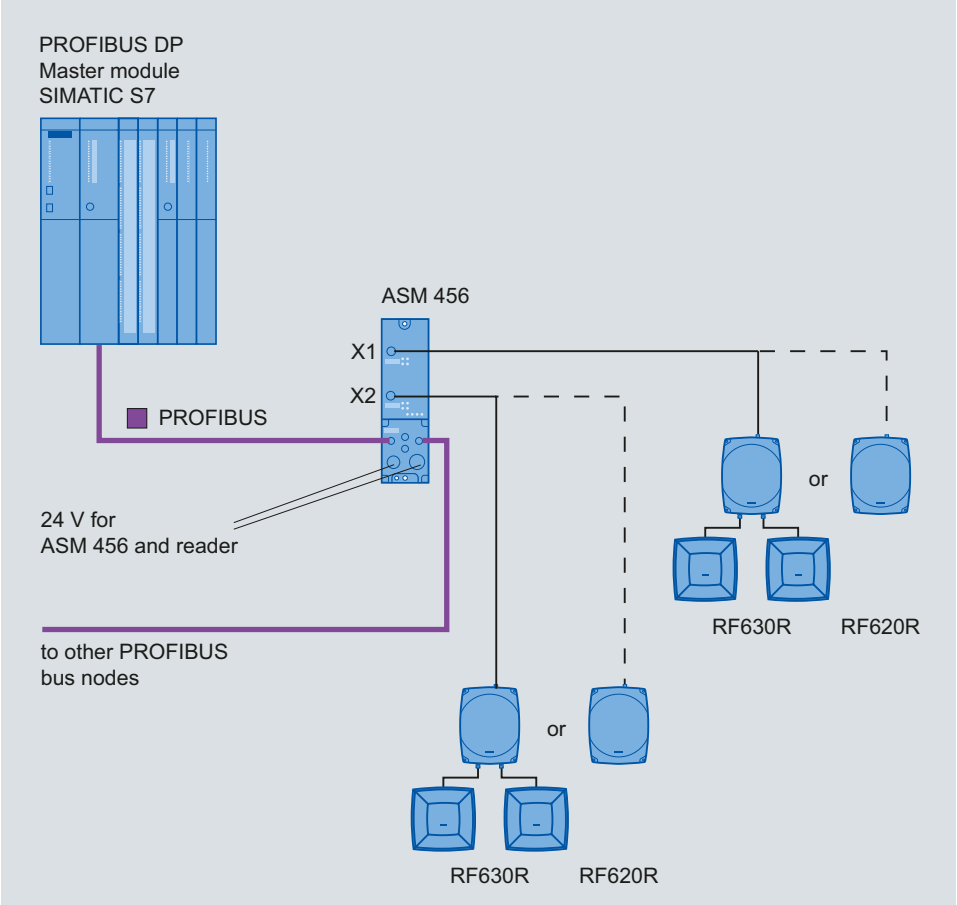

Figure 8-8 Configuration with ASM 456

For more detailed information, please refer to ASM 456 Operating Instructions (http://support.automation.siemens.com/WW/view/de/32629442).

Configuration with ASM 475

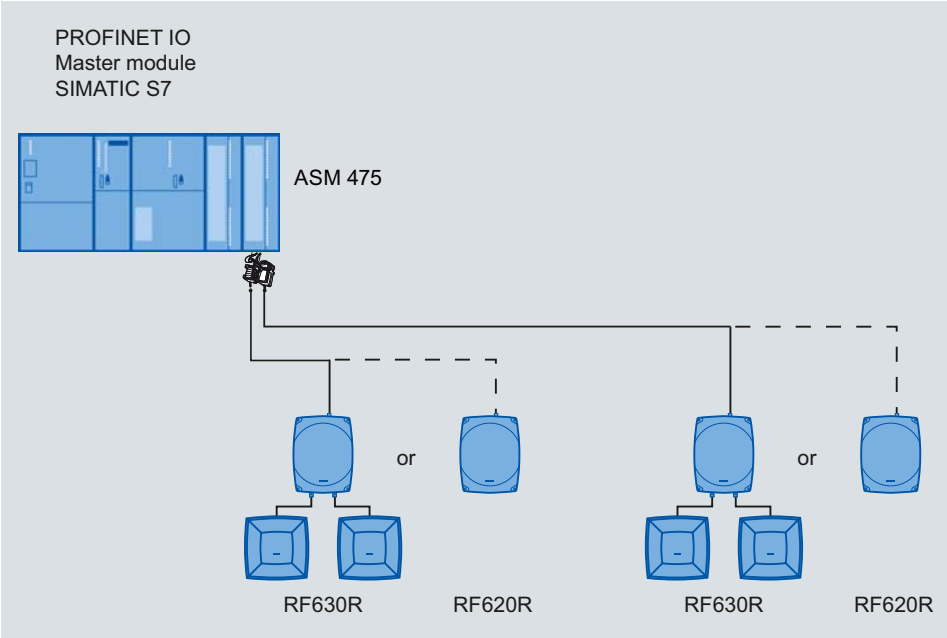

Figure 8-9 Configuration with ASM 475

Configuration with RF182C

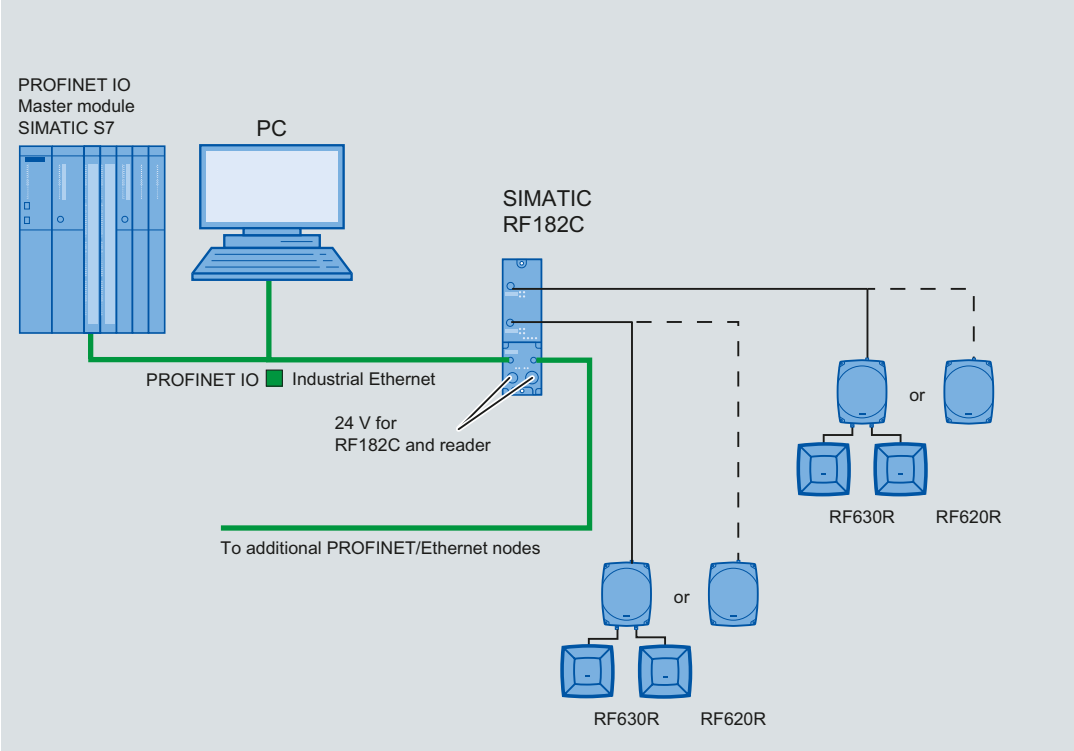

Figure 8-10 Configuration with SIMATIC RF182C

For more information, see RF182C Operating Instructions (http://support.automation.siemens.com/WW/view/en/38507897)

System diagnostics

9

9.1 Error messages and flash codes for RF660R

Error code	Error description	Flashing of ERR LED	Remark
-	Reader is not active	1	Indicates that the reader is not active
1000	Serious error: Programming of the synthesizer failed	20	Hardware error
1001	Serious error: Antennas connected incorrectly	20	Hardware error
1002	Serious error: Power amplifier could not be connected	20	Hardware error
1003	Serious error: Tx gain could not be set	20	Hardware error
1004	Serious error: Rx gain could not be set	20	Hardware error
1005	Serious error: Delete FLASH failed	20	Hardware error
1006	Serious error: FLASH write failed	20	Hardware error
2000	Serious error: Software errors	20	Software errors
2001	Error: Config rollback error	20	Software errors
2002	Serious error: Saving the default config to FLASH failed	20	Hardware error
5101	Error: No firmware selected for ramp-up	18	Faulty firmware
5102	Error: Antenna not connected	3	Antenna not connected

1 x flashing of the ERR LED means no error. This means that the reader is not currently active.

9.2 Error messages and flash codes for RF620R/RF630R

error_MOBY

The ERR LED of the reader flashes when the ASM reports error messages.

Table 9- 1 Error messages of the MOBY-ASM via the "error_MOBY" variable

Error code (B#16#..)	Flashing of ERR LED	Description
00	–	No error Default value if everything is ok.
	1x	Boot message
01	2x	Presence error, possible causes: • The active command was not carried out completely • The tag has left the field while the command is being processed • Communication fault between reader and tag The next command is automatically executed on the next tag. A read or write command is possible.
02	2x	Presence error: A tag has passed by a reader without being processed by a MOBY command. • This error message is not reported immediately. Instead, the ASM waits for the next command (read, write). This command is immediately replied to with this error. This means that a read or write command is not processed. The next command is executed normally by the ASM again. An init_run from FB 45 also resets this error state. • Bit 2 is set in parameter "option_1" and no tag is in the transmission window.
03	3x	Error in the connection to the reader. The reader does not answer. • Cable between MOBY ASM and reader is wired incorrectly or cable break. • Antenna error: (Cable is defective), cable is no longer connected • The 24 V supply voltage is not connected or is not on or has failed briefly. • Automatic fuse on the ASM has blown. • Hardware defect • Another reader is in the vicinity and is active. • Interference on reader - or PROFIBUS line • Execute init_run after error correction
04	4x	Error in tag memory The tag has never been write-accessed or has lost the contents of its memory due to battery failure. • Replace tag (if battery bit is set). • Initialize tag with the STG • Re-initialize tag

Error code (B#16#..)	Flashing of ERR LED	Description
05	5x	• Unknown command • Incorrect parameter • Function not allowed • Mode in SET-ANT command unknown FB 45/FC 55 is sending an uninterpretable command to the MOBY-ASM. • Command_DB contains invalid command parameters. • The command_DB was overwritten by the user • The MDS reported an address error.
06	6x	Field disturbance on reader The reader is receiving interference pulses from the environment. • The distance between two readers is too small and does not correspond to the configuration guidelines • The connecting cable to the reader is defective or too long or does not comply with the specification
07	7x	No free ETSI transmit channel
09		Wrong communications standard selected in the init_run command (e.g. FCC in ETSI reader)
0B	11x	Tag memory cannot be read correctly or cannot be written. Tag reports an error: • Other error (00000000B) * • Insufficient power (00001011B): Tag is in the limit range * • Non-specific error (00001111B) *
0C	12x	The tag memory cannot be write-accessed. • Tag memory is defective • Memory is write-protected (Memory Locked: 000000100B) (The tag memory is PERMA-locked and cannot be overwritten or the reader password has to be reset)
0D	13x	Error in specified address (address error) • The specified address does not exist on the tag • The command must be checked and corrected. • This is not the correct tag type. • Access attempted to non-existent or non-accessible memory areas (Memoryoverrun: 00000011B)
0E	14x	Password error • Incorrect tag password (the reader password must be set again so that is agrees with the password).
0F	1x	Start-up message from ASM. The ASM was off and has not yet received an init_run command • Execute an init_run • The same physical ASM channel is used in two (or more) UDT 10 structures. Check the ASM_address and ASM_channel in *all* UDT 10 structures.

Error code (B#16#..)	Flashing of ERR LED	Description
10	16x	NEXT command not possible or not permitted • ASM is operating without MDS control (MDS_control = 0.1) • ASM has already received a Next command. • ASM / write/read device doesn't recognize NEXT command. REPEAT after forbidden commands: • REPEAT for SET-ANT • REPEAT for SLG status
11	–	Short circuit or overload of the 24 V outputs (DQ, error code, presence) • The affected output is turned off. • All outputs are turned off when total overload occurs. • A reset can only be performed by turning the 24 V voltage off and on again. • Then start init_run.
12	18x	Internal ASM communication error • Connector contact problem on the ASM • Defective ASM hardware – Return ASM for repair • Start init_run command after error correction.
13	19x	• ASM/reader does not have enough buffer to store the command intermediately. • Maximum allowable number of 150 commands in a command chain was ignored. If REPEAT is used in connection with a command chain, the maximum number of commands is also 150 (including the REPEAT command). If a command chain contains more than 150 commands, after the 150th command is called, it will be canceled and the above error message will be sent without processing the complete chain. Commands in the command chain that have already been executed can still be sent later after the error message "0x13" is sent.
14	20x	Internal ASM / write/read device error • Program sequence error on the ASM • Turn power of ASM off and on again. • Start init_run command after error correction. • Watchdog error on reader
15	21x	Wrong parameterization of the ASM/reader • Check INPUT parameters in UDT 10 • Check parameters in HW Config • Transmit power set too high • Unused parameter bits are not 0. • init_run command is parameterized incorrectly • After a start-up, the ASM has still not received an init_run. • Parameter scanning_time = 0x00 was set (no standard selected).

Error code (B#16#..)	Flashing of ERR LED	Description
16	22x	The FB command cannot be executed with the ASM parameters on PROFIBUS. • Length of the input/output areas too small for the cyclic I/O word. Did you use the right GSD file? • FB command (e.g. read) has too much user data (data length > 233 bytes)
17	23x	Communication error between FB 45/FC 55 and MOBY-ASM. Handshake error • Params_DB (UDT 10) of this ASM station is being overwritten by other parts of the program • Check parameters of MOBY-ASM in UDT 10 • Check FB 45/FC 55 command which caused this error. • Start init_run command after error correction.
18	–	An error has occurred which must be acknowledged with an init_run. • A temporary short circuit has occurred on PROFIBUS. • The init_run command is faulty • Start init_run command after error correction. • Check parameters ASM_address, ASM_channel, and MOBY_mode.
19	25x	Previous command is active or buffer overflow. The user sent a new command to the ASM although the last command was still active. • Active command can only be terminated with an init_run. • Before a new command can be started the READY bit must be 1 (exception: init_run). • Two FB 45/FC 55 calls were parameterized with the same parameters "ASM_address" and "ASM_channel" • Two FB 45/FC 55 calls are using the same Params_DB pointer • Start init_run command after error correction. • When command repetition (e.g. read-only MDS) is used, no data are fetched from the tag. The data buffer on the ASM has overflowed. Tag data have been lost.
1A	–	PROFIBUS DP error occurred. • The PROFIBUS DP bus connection was interrupted – Wire break on the bus – Bus connector on ASM was removed briefly • PROFIBUS DP master no longer addresses the ASM • Execute an init_run • The ASM has detected a message frame interruption on the bus. The PROFIBUS may have been reconfigured (e.g. with HW Config). This error is only indicated when access monitoring has been enabled in the PROFIBUS configuration.
1B	27x	There is an inconsistency in the parameterization of the reader. In expert mode, parameters were probably set which the reader cannot use. • ETSI performance testing faulty

Error code (B#16#..)	Flashing of ERR LED	Description
1C	28x	• Antenna is already switched off • Antenna is already switched on • Mode in SET-ANT command not recognized.
1D	–	More MDSes are in the transmission window than the SLG is capable of processing simultaneously. • Only 1 MDS can be processed at a time with FB 45. • With FB 45 and FC 55: there is more than one tag with the same EPC ID in the antenna field of the reader. • With FC 55: Increase the value in multitag or decrease the number of MDSes in the field. • With FC 55: A read or write command has been sent on a transponder (UID) and there are one or more transponders in the antenna field, for which the contents of the addresses FF00 – FF03 of the EPC ID do not agree (unambiguity when transponder is accessed via 8-byte long UID). • Power supply of the MDS in the limit range: Due to short-term power shortage, an MDS loses its communications status (session), upon which the identical EPC-ID is sent a second time as soon as the power threshold is exceeded again. Increase the reader's radiated power and/or reduce the distance between antenna and MDS until this effect no longer occurs.
1E	30x	Wrong number of characters in the command message frame.
1F	31	Running command canceled by RESET (init_run or cancel) or bus connector removed • Communication with the tag was terminated by init_run. • This error can only be reported on init_run or cancel

*) You will find the meaning of the error numbers in the EPC Global Class 1 Gen 2 document, Annex I.

Accessories

10

10.1 Wide-range power supply unit for SIMATIC RF systems

10.1.1 Features

Wide-range power supply unit for SIMATIC RF systems	
	(1) DC output 1 (2) DC output 2 (3) Mains connection
Features	
• Wide-range input (3) for use worldwide • Dimensions without mains cable: 175 x 85 x 35 mm • Dimensions including mains cable: 250 x 85 x 35 mm • CE-compliant (EU and UK versions) • UL-certified for US and Canada (US version) • Mechanically and electrically rugged design • Secondary side (1), (2): 24 V DC / 3 A • Short-circuit and no-load stability • Suitable for frame mounting • 3 versions for use in the EU, UK, US	

Description

The wide-range power supply unit for SIMATIC RF systems is a universal compact power supply and provides the user with an efficient, cost-saving solution for many different mid-range power supply tasks.

The primary switched power supply is designed for use on single-phase AC systems. The two DC outputs (sockets) are connected in parallel and protected by a built-in current limiting circuit against overload and short-circuits.

The device is vacuum-cast and prepared for Safety Class 2 applications. The EU and UK versions satisfy the low-voltage guideline as well as the current EU standards for CE conformity. Furthermore, the US version has been UL-certified for the US and Canada.

10.1.2 Scope of supply

- Wide-range power supply unit for SIMATIC RF systems
- 2 m mains cable (country-specific)
- Protective cover for flange outlet
- Operating Instructions

10.1.3 Ordering data

Wide-range power supply unit for SIMATIC RF-systems (100 - 240 V AC / 24 V DC / 3 A) with 2 m connecting cable with country-specific plug	EU: 6GT2898-0AA00 UK: 6GT2898-0AA10 US: 6GT2898-0AA20
24 V-connecting cable, length 5 m	6GT2491-1HH50

10.1.4 Safety Information

⚠ WARNING

Danger to life

It is not permitted to open the device or to modify the device.

The following must also be taken into account:

- Failure to observe this requirement shall constitute a revocation of the CE approval, UL certification for the US and Canada as well as the manufacturer's warranty.
- For installation of the power supply, compliance with the DIN/VDE requirements or the country-specific regulations is essential.
- The field of application of the power supply is limited to "Information technology in electrical office equipment" within the scope of validity of the EN 60950/VDE 0805 standard.
- When the equipment is installed, it must be ensured that the mains socket outlet is freely accessible.
- The housing can reach a temperature of +25 °C during operation without any adverse consequences. It must, however, be ensured that the power supply is covered in the case of a housing temperature of more than +25°C to protect persons from contact with the hot housing. Adequate ventilation of the power supply must be maintained under these conditions.

NOTICE

The wide-range power supply unit must only be used for SIMATIC products in the specifically described operating range and for the documented intended use.

If the wide-range power supply unit for SIMATIC RF systems (MLFB: 6GT2 898-0AA20) is used for an end product other than the SIMATIC RF600 system, the following must be taken into account:

- The electric strength test of the end product is to be based upon a maximum working voltage of: Transition from primary to SELV: 353 V DC, 620 Vpk
- The following secondary output circuits are SELV (low voltage; SELV = Safety Extra Low Voltage): all
- The following secondary output circuits are at non-hazardous energy levels: all
- The power supply terminals and/or connectors are suitable for field wiring if terminals are provided.

- The maximum investigated branch circuit rating is: 20 A
- The investigated pollution degree is: 2

WARNING

If the wide-range power supply unit for SIMATIC RF systems (MLFB: 6GT2 898-0AA20) is connected to and in use for other products than the SIMATIC RF660R Portal Reader (MLFB: 6GT2811-0AA00), the end user is responsible and liable for any operation of the system or end product, which includes the wide-range power supply unit for SIMATIC RF systems (MLFB: 6GT2 898-0AA20).

WARNING

Alterations to the SIMATIC RF600 components and devices as well as the use of SIMATIC RF600 components with third-party RFID devices are not permitted.

Failure to observe this requirement shall constitute a revocation of the radio equipment approvals, CE approval and manufacturer's warranty. Furthermore, the compliance to any salient safety specifications of VDE/DIN, IEC, EN, UL and CSA will not be guaranteed.

Safety notes for the US and Canada

The SIMATIC RF660R Portal Reader (MLFB: 6GT2811-0AA00) is for use only with the wide-range power supply unit for SIMATIC RF systems (MLFB: 6GT2 898-0AA20) - as optional component – or with power supplies which are UL-listed according to the safety standards specified below:

- UL 60950-1 - Information Technology Equipment Safety - Part 1: General Requirements
- CSA C22.2 No. 60950 -1 - Safety of Information Technology Equipment

WARNING

The compliance of the SIMATIC RF600 system to the safety standards mentioned above will not be guaranteed if neither the wide-range power supply unit for SIMATIC RF systems (MLFB: 6GT2 898-0AA20) nor power supplies listed according to the safety standards above are used.

10.1.5 Connecting

- There are three different (country-specific) mains cables for the EU, UK and US.
  The appropriate mains cable must be connected to the primary input of the power supply.

NOTICE
It is only permissible to insert or remove the mains cable when the power supply is de-energized.

- The wide-range power supply unit has total insulation (Safety Class 2), IP65
- It can be mounted using four fixing holes.

10.1.6 Technical specifications

Table 10- 1 General technical specifications

Insulation stability (prim./sec.) $U_{ins\ p/s}$		3.3 kV_{AC}
Insulation resistance R_{ins}		>1 GΩ
Leakage current I_{leak}	U_{in} = 230 V_{AC}, f = 50 Hz	< 200 µA
Safety class (SELV)	Designed for installation in devices of Safety Class 2	
Mains buffering t_h	U_{in} = 230 V_{AC}	≥ 50 ms
Ambient temperature		-25 °C to +55 °C
Surface temperature	Module top, center	Max. 96 °C
Storage temperature		-40 °C to +85 °C
Self-heating on full-load		max. 45 K
Interference immunity ESD HF fields Burst Surge HF injection Mains quality test	EN 61000-4-2, 4-3 up to 4-6, 4-11	 Air discharge: 15 kV 10 V/m symmetrical: 2 Symmetrical: 1 10 V_{rms}
Cooler		Free convection
Dimensions L x W x H		175 mm x 85 mm x 35 mm
Weight		720 g
Housing / casting		UL 94-V0
Power supply class	according to CSA	Level 3
Degree of protection	IP 65	

Table 10- 2 Technical specifications for the input

Rated input voltage U_{in}	EN 60950 / UL 60950	100 to 240 V AC 120 to 353 V DC
Input voltage range U_{in}		94 to 264 V AC 120 to 375 V DC (UL: 353 V_{DC})
Input frequency f_{in}		50/60 Hz
Radio interference level		EN 55011/B
Switching frequency f_{sw}		approx. 70 kHz typ.
Length of cable		2 m

Table 10- 3 Technical specifications of the output

Output voltage tolerance ΔU_{out}	U_{in} = 230 V_{AC}	$U_{out\ nom}$ ≤ +2 %/-1 %
Overvoltage protection		$U_{out\ nom}$ +20 % typ.
Noise ΔU_{LF}	U_{in} = min., BW: 1 MHz	≤ 1 % U_{out}
Noise ΔU_{HF}	U_{in} = min., BW: 20 MHz	≤ 2 % U_{out}
Line Regulation Load Regulation	U_{in} = min./max. I_{out} = 10...90...10 %	≤ 1,0 % ≤ 1,0 %
Short-circuit current I_{max}	I_{nom} = 4 A (+50°C)	105 up to 130 % I_{nom}
Settling time t_R load variations	I_{out} = 10...90...10 %	< 5 ms
Temperature coefficient ε	T_A = -25 °C to +70 °C	0.01 %/K
Overload behavior P_{over}		Constant current
Short-circuit protection/ No-load response		Continuous/no-load stability
Derating	T_A > +50 °C to +70 °C	max. 2 %/K
Connector type	Flanged connector Binder, Order No.: 09-3431-90-04	4 pins

Table 10- 4 Output configurations

Input	Outputs U1 = U2	ILoad = I1 + I2	Efficiency (%)	Remarks
110 V AC	24 V DC	0 A		No-load stability
110 V AC	24 V DC	3 A	≥ 88	
220 V AC	24 V DC	0 A		No-load stability
220 V AC	24 V DC	3 A	≥ 90	

Table 10- 5 Compliance with standards

Designation	Standard	Values
Electrical safety	EN 60950 / UL 60950 / CAN/CSA 22.2 950, 3 Edition	
Conducted interference	EN 61000-6-3 EN 55011	Class B
Emission	EN 61000-6-3 EN 55011	Class B

All values are measured at full-load and at an ambient temperature of 25 °C (unless specified otherwise).

10.1.7 Pin assignment of DC outputs and mains connection

DC outputs	Assignment
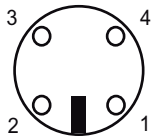	(1) Ground (0V)
	(2) +24 V DC
	(3) +24 V DC
	(4) Ground (0V)

Mains connection	Assignment
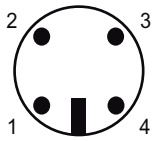	(1) 100 to 240 V AC
	(2) n.c.
	(3) 100 to 240 V AC
	(4) n.c.

10.1.8 Dimension drawing

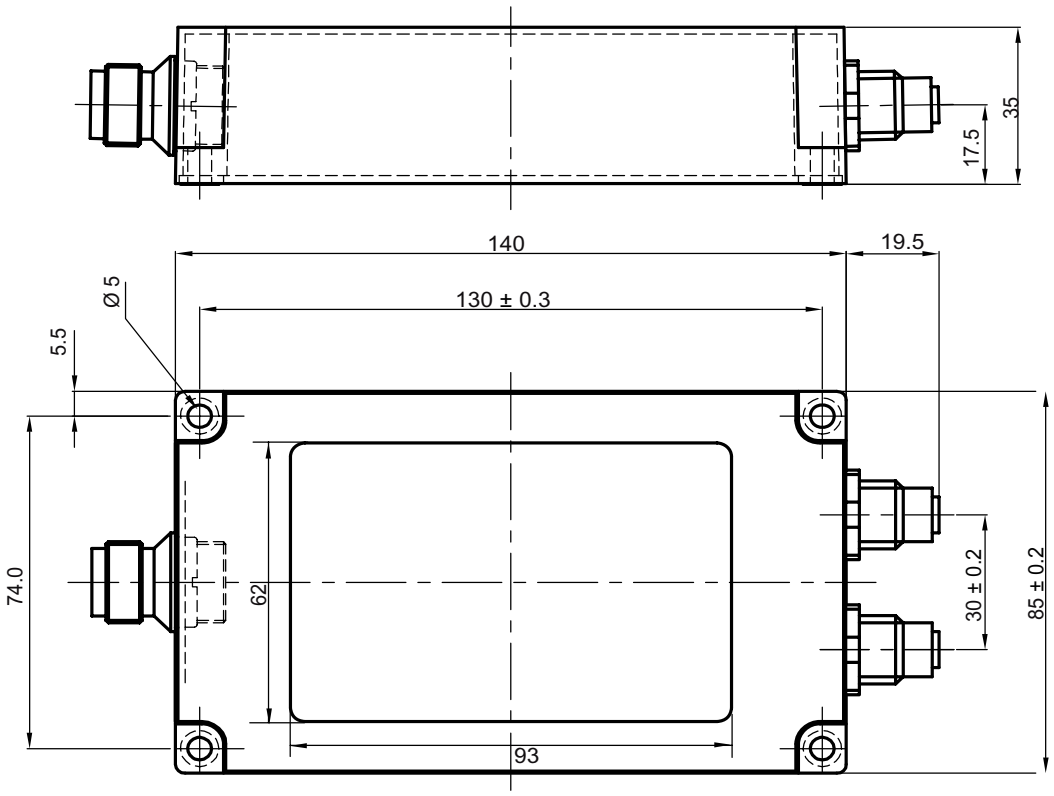

Units of measurement:

All dimensions in mm

10.1.9 Certificates and approvals

Table 10- 6 Wide-range power supply unit for SIMATIC RF systems 6GT2898-0AA00 - Europe, 6GT2898-0AA10 - UK

Certificate	Description
CE	CE approval to 2004/108/EC EMC 73/23/EEC LVD

Table 10- 7 Wide-range power supply unit for SIMATIC RF systems 6GT2898-0AA20 - USA

Standard	
c UL us	This product is UL-certified for the US and Canada. It meets the following safety standards: UL 60950-1 - Information Technology Equipment Safety - Part 1: General Requirements CSA C22.2 No. 60950 -1 - Safety of Information Technology Equipment UL Report E 205089

Appendix

A

A.1 Certificates and approvals

Notes on CE marking

The following applies to the system described in this documentation:
The CE marking on a device is indicative of the corresponding approval:

DIN ISO 9001 certificate

The quality assurance system for the entire product process (development, production, and marketing) at Siemens fulfills the requirements of ISO 9001 (corresponds to EN29001: 1987).

This has been certified by DQS (the German society for the certification of quality management systems).

EQ-Net certificate no.: 1323-01

Table A- 1 FCC IDs: NXW-RF660, NXW-RF620R, NXW-RF630R, IC: 267X-RF620R, IC: 267X-RF630

Standards	
FC Federal Communications Commission	FCC Title 47, Part 15.sections 15.247 Radio Frequency Interference Statement This equipment has been tested and found to comply with the limits for a Class A digital device, pursuant to Part 15 of the FCC Rules.
Industry Canada Radio Standards Specifications	RSS-210 Issue 6, Sections 2.2, A8
c UL us	This product is UL-certified for the USA and Canada. It meets the following safety standard(s): UL 60950-1 - Information Technology Equipment Safety - Part 1: General Requirements CSA C22.2 No. 60950 -1 - Safety of Information Technology Equipment UL Report E 205089

Certification for the USA, Canada and Australia

Safety

One of the following markings on a device is indicative of the corresponding approval:	
	Underwriters Laboratories (UL) to UL 60950 Standard (I.T.E), or to UL508 (IND.CONT.EQ)
	Underwriters Laboratories (UL) according to Canadian standard C22.2 No. 60950 (I.T.E) or C22.2 No. 142 (IND.CONT.EQ)
	Underwriters Laboratories (UL) according to standard UL 60950, Report E11 5352 and Canadian standard C22.2 No. 60950 (I.T.E) or UL508 and C22.2 No. 142 (IND.CONT.EQ)
	UL recognition mark
	Canadian Standard Association (CSA) per Standard C22.2. No. 60950 (LR 81690) or per C22.2 No. 142 (LR 63533)
	Canadian Standard Association (CSA) per American Standard UL 60950 (LR 81690) or per UL 508 (LR 63533)

EMC

USA	
Federal Communications Commission Radio Frequency Interference Statement	This equipment has been tested and found to comply with the limits for a Class A digital device, pursuant to Part 15 of the FCC Rules. These limits are designed to provide reasonable protection against harmful interference when the equipment is operated in a commercial environment. This equipment generates, uses, and can radiate radio frequency energy and, if not installed and used in accordance with the instruction manual, may cause harmful interference to radio communications. Operation of this equipment in a residential area is likely to cause harmful interference in which case the user will be required to correct the interference at his own expense.
Shielded Cables	Shielded cables must be used with this equipment to maintain compliance with FCC regulations.
Modifications	Changes or modifications not expressly approved by the manufacturer could void the user's authority to operate the equipment.
Conditions of Operations	This device complies with Part 15 of the FCC Rules. Operation is subject to the following two conditions: (1) this device may not cause harmful interference, and (2) this device must accept any interference received, including interference that may cause undesired operation.

CANADA	
Canadian Notice	This Class B digital apparatus complies with Canadian ICES-003.
Avis Canadien	Cet appareil numérique de la classe b est conforme à la norme NMB-003 du Canada.

AUSTRALIA	
	This product meets the requirements of the AS/NZS 3548 Norm.

A.2 National regulations

A.2.1 Exceptions for certain regions in France

The following table defines the permitted frequency bands for the ETSI profile which must be utilized for special regions in France. The *italic* entries show the permitted frequency bands for transmitting in the EPC Class 1 Gen 2 multi-channel dense interrogator environment. The EPC Class 1 Gen 2 single-channel regulatory environment can use all frequency bands.

Channel ID	Frequency (MHz)	Maximum transmit power (W)
100	865.1	0.1
101	865.3	0.1
102	865.5	0.1
103	865.7	0.5
104	*865.9*	0.5
105	866.1	0.5
106	*866.3*	0.5
107	866.5	0.5
108	*866.7*	0.5
109	866.9	0.5
110	*867.1*	0.5
111	867.3	0.5
112	*867.5*	0.5
113	867.7	0.5
114	867.9	0.5

Due to a European Commission decision as of 16th May 2007 granting France the derogation to further limit the emission powers for the use of the frequency band 865.6-867.6 MHz for the radio frequency identification devices (RFID) operating within certain zones on the territory of France, the operation of the RF600 system is limited to operate within the power levels indicated above, when it is inside the following regions:

	Geographic coordinates	Region/Department	Radius of the region with max. power of 500 mW ERP
AVON LES ROCHES (camp Le Ruchard)	47° 12' 04" N-000° 28' 48" E	37 - Indre-et-Loire	20 km
BEIGNON (camp de COETQUIDAN)	47° 56' 56" N-002° 09' 26" W	56 - Morbihan	15 km
BITCHE	49° 03' 09" N-007° 28' 43" E	57 - Moselle	20 km (only in French territory)
CAYLUS	44° 16' 42" N-001° 44' 57" E	82 - Tarn-et-Garonne	20 km
LA CAVALERIE (camp du LARZAC)	44° 00' 40" N-003° 10' 16" E	12 - Aveyron	10 km
LA COURTINE	45° 42' 40" N-002° 15' 18" E	23 - Creuse	20 km
MAILLY LE CAMP	48° 39' 55" N-004° 13' 04" E	10 - Aube	20 km
MONTFERRAT (camp de CANJUERS)	43° 38' 47" N-006° 28' 05" E	83 - Var	10 km
MOURMELON	49° 07' 30" N-004° 21' 59" E	51 - Marne	15 km
SISSONNE	49° 34' 08" N-003° 54' 57" E	02 - Aisne	20 km
SUIPPES	49° 07' 37" N-004° 33' 05" E	51 - Marne	20 km
VALDAHON LYAUTEY	47° 09' 24" N-006° 19' 25" E	25 - Doubs	20 km

A.3 Service & Support

Technical Support

You can access technical support for all IA/DT projects via the following:

- Phone: + 49 180 5050 222
- Fax: + 49 180 5050 223
- E-mail (mailto:adsupport@siemens.com)
- Internet: Online support request form: (http://www.siemens.com/automation/support-request)

Contact partner

If you have any further questions on the use of our products, please contact one of our representatives at your local Siemens office.

The addresses are found on the following pages:

- On the Internet (http://www.siemens.com/automation/partner)
- In Catalog CA 01
- In Catalog FS 10 specially for factory automation sensors

Service & support for industrial automation and drive technologies

You can find various services on the Support homepage (http://www.siemens.com/automation/service&support) of IA/DT on the Internet.

There you will find the following information, for example:

- Our newsletter containing up-to-date information on your products.
- Relevant documentation for your application, which you can access via the search function in "Product Support".
- A forum for global information exchange by users and specialists.
- Your local contact for IA/DT on site.
- Information about on-site service, repairs, and spare parts. Much more can be found under "Our service offer".

RFID homepage

For general information about our identification systems, visit RFID homepage (http://www.siemens.com/simatic-sensors/rf).

Technical documentation on the Internet

A guide to the technical documentation for the various products and systems is available on the Internet:

SIMATIC Guide manuals (http://www.siemens.com/simatic-tech-doku-portal)

Online catalog and ordering system

The online catalog and the online ordering system can also be found on the A&D Mall homepage. (http://www.siemens.com/automation/mall)

Training center

We offer appropriate courses to get you started. Please contact your local training center or the central training center in

D-90327 Nuremberg.

Phone: +49 (911) 895-3200

For information about courses, see the SITRAIN homepage (http://www.sitrain.com).

Glossar

AG

Automatisierungsgerät: Die speicherprogrammierbaren Automatisierungsgeräte (AG) des SIMATIC S5-Systems bestehen aus einem Zentralgerät, einer oder mehreren CPUs und weiteren Baugruppen (z.B. Ein-/Ausgabebaugruppen).

Aktive Fläche

Siehe Aktives Feld

Aktive Oberfläche

Siehe Aktives Feld

Aktives Feld

Bereich mit Mindestfeldstärke, in dem der Erfassungsbereich liegt. Innerhalb des Erfassungsbereichs können Daten von/zum Tag gelesen/geschrieben werden.

Aktives Tag / Transponder

Aktive Transponder sind batteriebetrieben, d.h. sie beziehen die Energie zur Erhaltung der Daten im Mikrochip aus einer eingebauten Batterie. Normalerweise befinden sie sich im Ruhezustand bzw. senden keine Informationen aus, um die Lebensdauer der Energiequelle zu erhöhen. Nur wenn ein spezielles Aktivierungssignal empfangen wird, aktiviert sich der Sender.

AM

Amplitudenmodulation, Daten sind in den Änderungen der Amplitude der Trägerfrequenz enthalten.

Amplitudenmodulation

Siehe AM

AS

Siehe Automatisierungssystem

ASM

Anschalt Modul, Siehe Communication modules

Automatisierungssystem (AS)

Eine speicherprogammierbare Steuerung (SPS) des SIMATIC S7-Systems, die aus einem Zentralgerät, einer CPU und diversen Ein-/Ausgabebaugruppen besteht.

Batterielose Datenspeicher

Mobile Datenspeicher, die ohne Batterie arbeiten. (Siehe Transponder). Die Energieübertragung zum Datenspeicher erfolgt über ein elektromagnetisches Wechselfeld.

Baud

Einheit, entspricht Zeichen pro Sekunde.

Baudrate

Die Baudrate beschreibt die Schrittgeschwindigkeit bei der Datenübertragung.

Byte

Eine Gruppe von acht Bits

CE-Kennzeichnung

Communauté Européenne (Warensiegel der Europäischen Union)

CE-Richtlinien

Siehe CE-Kennzeichnung

Communication Modules

Communication Modules sorgen für die Integration der Identifikationssysteme in SIMATIC, SINUMERIK, für den Anschluss an PROFIBUS, PROFINET, PC bzw. an beliebige Systeme. Einmal mit entsprechenden Parametern und Daten versorgt, wickeln sie den Datenverkehr ab. Anschließend werden die entsprechenden Ergebnisse bzw. Daten zur Verfügung gestellt. Entsprechende Softwarebausteine (FB/FC für SIMATIC, C-Bibliotheken für PC mit Windows) garantieren dabei die einfache und schnelle Integration in die Applikation.

Continuous Wave

Siehe CW

CW

Continuous Wave, Daten sind in der Trägerfrequenz enthalten, die ein- und ausgeschaltet wird.

Data Rate

Die Rate mit welcher Daten zwischen dem Tag und dem Reader ausgetauscht wird. Typische Einheiten sind Bits pro Sekunde oder Bytes pro Sekunde.

Data Transfer Rate

Anzahl der Zeichen die von einem Tag zu einem Reader innerhalb einer gegebenen Zeit übertragen werden können. Baud Raten werden ebenso benutzt um anzugeben wie schnell ein Reader Informationen vom Tag lesen kann.

Datenübertragungsrate

Maßeinheit für die Datenmenge, die innerhalb einer Zeiteinheit übertragen wird, z.B. Byte/s, siehe auch Baud

dB

siehe Dezibel

dBm

Maßeinheit für die Sendeleistung im logarithmischen Verhältnis zu 1mW (Milliwatt).

0dBm = 1mW, +23dBm = 200mW, +30dBm = 1W.

dBr

dB(relativ), eine relative Differenz zu einem Bezugswert

Dense Reader Mode (DRM)

In diesem Betriebsmodus wird durch Anwendung von Störungsmindernden Maßnahmen die Tag-Lesbarkeit erhöht.

Der DRM ist nur für Gen 2 definiert und funktioniert nicht mit anderen Tag-Typen.

Dezibel (dB)

Maßeinheit für das logarithmische Verhältnis zweier Größen.

Dynamischer Betrieb

Im dynamischen Betrieb bewegt sich der Datenträger in Abhängigkeit von der Konfiguration mit einer Transversalgeschwindigkeit am Reader vorbei. Verschiedene Prüfmechanismen gewährleisten eine fehlerfreie Datenübertragung auch unter extremen Umwelteinflüssen.

EAN

Europäische Artikel Nummer. Standardisierter Barcode der in Europa, Asien and Südamerika verwendet wird. Wird verwaltet durch EAN International.

Effective Isotropic Radiated Power

Siehe EIRP

Effective Radiated Power

Siehe ERP.

EGB-Richtlinie

Richtlinie für den Umgang mit **E**lektrostatisch **G**efährdeten **B**auteilen

EIRP

Effective Isotropic Radiated Power, eine Maßeinheit für die Strahlungsleistung von Antennen (bezogen auf Isotropstrahler) die vorwiegend in den USA benutzt wird. EIRP wird in Watt angegeben und ist nicht gleich ERP. (0dbi = - 2,14 dBm)

Elektromagnetische Verträglichkeit (EMV)

Unter Elektromagnetischer Verträglichkeit versteht man die Fähigkeit eines elektrischen oder elektronischen Geräts, in einem elektromagnetischen Umfeld fehlerfrei zu funktionieren, ohne dabei die Umgebung über gewisse Grenzen hinaus zu beeinflussen oder zu stören.

EMV

Siehe Elektromagnetische Verträglichkeit

EMV-Richtlinie

Richtlinie zur Elektromagnetischen Verträglichkeit. Diese Richtlinie betrifft alle elektrischen und elektronischen Apparate, Anlagen und Systeme, die elektrische und elektronische Bauteile enthalten.

EPC

Siehe EPC global

EPC global

Electronic Product Code (Elektronischer Produkt Code). Standardisiertes Nummernsystem zum Kennzeichnen von Waren, mit einer Datenbreite von wahlweise 64, 96 oder 256 Bits.

Erfassungsbereich

Bereich, in dem aufgrund einer bestimmten Mindestfeldstärke ein sicherer Datenaustausch zwischen Transponder und Reader möglich ist.

ERP

Effective Radiated Power, eine Maßeinheit für die Strahlungsleistung von Antennen (bezogen auf einen idealen Dipol) die vorwiegend in Europa benutzt wird. ERP wird in Watt angegeben und ist nicht gleich EIRP. (0dbm = + 2,14 dBi)

ETSI

European Telecommunications Standard Institute

European Article Numbering

Siehe EAN.

eXtensible markup language

Siehe XML.

FCC

Federal Communications Commission (USA)

Fernfeldkommunikation

RFID Antennen emittieren elektromagnetische Wellen. Wenn ein Tag weiter entfernt als eine volle Wellenlänge von der Sendeantenne des Readers ist, spricht man vom "Fernfeld". Wenn es innerhalb einer vollen Wellenlänge ist, spricht man vom "Nahfeld."

Die Wellenlänge bei UHF-RFID-Systemen beträgt ca. 33 cm.

Das Fernfeldsignal schwächt sich quadratisch mit der Distanz zur Antenne ab, während das Nahfeldsignal sich kubisch mit der Distanz zur Antenne abschwächt. Passive RFID-Systeme die auf der Fernfeldkommunikation beruhen, (UHF- und Mikrowellensysteme) haben eine längere Lesedistanz (read range), als Systeme die auf der Nahfeldkommunikation (typischerweise Nieder- und Hochfrequenzsysteme) beruhen.

FHSS

Frequency Hopping Spread Spectrum, Frequenzsprungverfahren.

FM

Frequenzmodulation, Daten sind in den Änderungen der Frequenz der Trägerfrequenz enthalten.

Frequency Shift Keying

Siehe FSK

Frequenzhopping

Frequenzsprungverfahren. Automatische Suche nach freien Kanälen.

Beim Frequenzhopping werden Datenpakete zwischen den Kommunikationspartnern auf beständig wechselnden Trägerfrequenzen übermittelt. So kann auf Störungen durch Geräte, die Signale auf derselben Frequenz (Kanal) übermitteln, reagiert werden. Nach erfolglosem Sendeversuch eines Datenpaketes kann dieses auf einer anderen Trägerfrequenz erneut übertragen werden. RF600 arbeitet standardmäßig nach diesem Verfahren (FCC) nur in USA und Kanada.

Frequenzmodulation

Siehe FM.

FSK

Modulation, Frequency Shift Keying, Daten sind in den Änderungen zwischen zwei Frequenzen enthalten.

Grenzabstand

Grenzabstand ist der maximal lichte Abstand zwischen Reader-Antenne und Transponder, bei dem die Übertragung unter normalen Bedingungen gerade noch funktioniert.

ICNIRP

International Commission of Non Ionizing Radiological Protection

ICRP

International Commission of Radiological Protection

Interface Modules

Siehe Communication modules

Interrogator

Siehe Reader

ISO

International Standard Organisation

ISO 18000

Standard für den Datenaustausch von RFID Systemen zwischen Reader und Transponder. Für die verschiedenen freigegebenen Frequenzbereiche für RFID gibt es verschiedene Unterdefinitionen dieses Standards. Der Bereich 865 ... 868 MHz ist beispielsweise in ISO 18000-6 beschrieben.

LAN

Local Area Network

LBT

Listen Before Talk, der Reader geht erst dann auf Sendung, wenn der Kanal frei ist.

Leserate

Anzahl der Tags, die innerhalb einer gegebenen Zeit gelesen werden können.
Die Leserate kann auch verwendet werden für die Maximalrate, mit welcher Daten von einem Tag gelesen werden können. Die Einheit ist bits pro Sekunde oder bytes pro Sekunde.

Lesereichweite

Die Distanz innerhalb der ein Reader mit einem Tag kommunizieren kann. Aktive Tags können eine längere Distanz zurücklegen als passive Tags, weil sie eine Batterie zum Senden von Signalen verwenden.

Licence Plate

10-stelliger Code, der auf jedem RFID-Tag gespeichert ist. Der Code des Licence Plate stellt eine Verbindung zwischen dem Gepäckstück und dem Gepäckabwicklungs-System des Flughafens her. Sobald der Licence Plate vom Reader gelesen wird, wird automatisch eine Nachricht an das Gepäckabwicklungs-System gesendet. Diese Nachricht enthält wichtige Daten zum Flug und zur Destination des Gepäckstücks. Mit Hilfe dieser Daten kann das Gepäckstück erfolgreich vom Gepäckabwicklungs-System des Flughafens sortiert werden.

MDS

Mobile Daten Speicher, siehe Transponder.

MES

Manufacturing Execution System

Metallfreier Raum

Abstand/Raum, der zwischen Transponder und Metall eingehalten werden muss, damit es nicht zu Störeinflüssen bei der Datenübertragung zwischen Transponder und Reader kommt.

Mobile Data Memory (MDS)

Mobile Daten Speicher, siehe Transponder

Modulation

Die Modulation ist ein Vorgang, bei dem ein oder mehrere Merkmale (z.B. Phase, Amplitude, Frequenz) einer Trägerschwingung entsprechend dem Verlauf einer modulierenden Schwingung verändert werden.

MTBF

Mean Time Between Failures, mittlere Ausfallzeit eines Gerätes

Multitagfähigkeit

Multitagfähigkeit bedeutet, ein Reader kann gleichzeitig mit verschiedenen Datenträgern kommunizieren. Daher kann der Reader ganz gezielt einen Transponder mit seiner UID ansprechen (siehe auch Pulkerfassung)

Nahfeldkommunikation

RFID Antennen emittieren elektromagnetische Wellen. Wenn ein Tag weiter entfernt als eine volle Wellenlänge von der Sendeantenne des Readers ist, spricht man vom "Fernfeld". Wenn es innerhalb einer vollen Wellenlänge ist, spricht man vom "Nahfeld."

Die Wellenlänge bei UHF-RFID-Systemen beträgt ca. 33 cm.

Das Fernfeldsignal schwächt sich quadratisch mit der Distanz zur Antenne ab, während das Nahfeldsignal sich kubisch mit der Distanz zur Antenne abschwächt. Passive RFID-Systeme die auf der Nahfeldkommunikation beruhen (typischerweise Nieder- und Hochfrequenzsysteme), haben eine längere Lesedistanz (read range), als Systeme die auf der Fernfeldkommunikation (typischerweise UHF- und Mikrowellensysteme) beruhen.

Nebenfelder

Zusätzlich zum Haupterfassungsbereich (Antennen-Haupt-Senderichtung, Hauptkeule) existieren Nebenfelder (Nebenkeulen), deren Größen in der Regel geringer sind als die des Haupterfassungsbereichs. Form und Ausprägung der Nebenfelder sind abhängig von der metallischen Umgebung. Nebenfelder sollten jedoch nicht für die Projektierung herangezogen werden.

PAS

Potentialausgleichsschiene

Passives Tag

Wenn elektromagnetische Wellen vom Reader die Antenne des Tags erreichen, wird die Energie durch die Antenne umgewandelt in Elektrizität, die den Chip des Tags mit Strom versorgt. Das Tag ist in der Lage auf dem Chip gespeicherte Informationen zurückzusenden. Normalerweise haben passive Tags keine Batterie. Besitzt das Tag einen RAM-Speicher, so

wird eine Batterie benötigt, die jedoch nur zum Speichern der Informationen im RAM verwendet wird. Insbesondere wird die Batterie nicht zum Datenaustausch zwischen Reader und Transponder verwendet.

Passives Tag / Transponder

Ein Tag ohne eigene Stromversorgung. Passive Transponder erhalten ihre Energie zur Versorgung des Mikrochips aus den empfangenen Funkwellen.

PDM

Pulsedauermodulation, Daten sind in der Dauer der Pulse enthalten.

Phasenmodulation

Siehe PM

PLC

Programable Logic Controller, siehe SPS.

PM

Phasenmodulation, Daten sind in den Änderungen der Phase der Trägerfrequenz enthalten.

Potentialausgleich

Durch den unterschiedlichen Aufbau von Anlagenteilen und unterschiedliche Spannungspegel können zwischen den Anlagenteilen Potentialunterschiede entstehen. Diese Unterschiede müssen über den Potentialausgleich ausgeglichen werden: Dazu werden Potentialausgleichsleitungen von Leistungskomponenten und Nichtleistungskomponenten an einer zentralen Ausgleichsschiene (PAS = Potential**a**usgleichs**s**chiene) zusammengefasst.

Programable Logic Controller

Siehe SPS.

Protokoll

Eine Zusammenstellung von Regeln die Kommunikationssysteme verwalten.

Pulkerfassung

Die Fähigkeit eines Reader quasi gleichzeitig mehrere oder viele Transponder zu erfassen und den Code zu lesen. Anders als bei Multitagfähigkeit ist der Reader nicht in der Lage einzelne Tags ganz gezielt anzusprechen.

Pulsedauermodulation

Siehe PDM

Radio Frequency Identification

Siehe RFID.

Reader (auch Interrogator)

Reader transferieren Daten zwischen den mobilen Datenspeichern (Transpondern) und den überlagerten Systemen. Die Daten, inklusive der zur Bearbeitung und Rücksendung notwendigen Energie, werden zu dem Transponder durch ein elektromagnetisches Wechselfeld übertragen. Dieses Prinzip erlaubt eine berührungslose Datenübertragung, garantiert eine hohe Industrietauglichkeit und funktioniert zuverlässig bei Verschmutzung oder durch nichtmetallische Materialien hindurch.

Reader talks first

Ein passives Tag kommuniziert im Lesefeld eines Readers mit dem Reader. Der Reader sendet Energie zu den Tags, welche erst antworten, wenn sie explizit gefragt werden. Der Reader ist in der Lage Tags mit einer bestimmten Seriennummer zu finden, die entweder mit 1 oder 0 beginnt.
Antworten mehr als ein Tag, kann der Reader nach allen Tags die mit 01 anfangen fragen und danach mit 010. Dies nennt sich "wandern" (walking) auf einem binären Ast, oder "tree walking".

Reziprozität

Reziprok bedeutet, dass eine wechselseitige Beziehung zwischen dem Sende- und Empfangsfall einer passiven Antenne vorliegt.

RFID

Radio Frequency Identification, Eine Methode zur Identifikation von Artikeln durch elektromagnetische Wellen, wobei der Reader das Tag mit Energie versorgt und mit ihm kommuniziert.

RFID-Systeme

SIMATIC RF-Identifikationssysteme steuern und optimieren den Materialfluss sowie Fertigungsabläufe. Sie identifizieren sicher, schnell und wirtschaftlich, arbeiten mit berührungsloser Datenübertragung, speichern Daten direkt am Produkt ab und sind unempfindlich gegen Verschmutzung.

RH circular

Rechtsdrehend zirkulare Polarisation (Right Hand circular)

RSSI-Schwellwert

Die "Received Signal Strength Indication" (RSSI) ist ein Indikator für die Empfangsfeldstärke der Transponder. Wenn die Feldstärke, mit der der Transponder empfangen wird, unterhalb der voreingestellten RSSI-Schwelle liegt, dann wird der Reader das Signal dieses Transponders ignorieren.

Durch Aktivierung des RSSI-Schwellwerts können Bereiche der Antennenfelder, in denen auf Transponder noch zugegriffen werden soll, eingeschränkt werden. Damit lassen sich unerwünschte Effekte, wie z.B. Überreichweiten bei Datenzugriffe auf Transponder vermindern.

RTNC

Stecker Bezeichnung (Reverse TNC). Industrie Koaxialstecker mit Schraubverschluss, verwendbar für Frequenzen bis ca. 2GHz. Der mechanische Aufbau des RTNC-Steckers ist nicht kompatibel zum TNC-Stecker.

RTTE

Radio and Telecommunications Terminal Equipment

Schreib-/Leseabstand

Siehe Übertragungsdistanz

SCM

Supply Chain Management

SELV

Safety Extra Low Voltage

Speicher Programierbare Systeme

Siehe SPS

SPS

Speicher Programierbare Systeme, elektronisches Gerät das in der Automatisierungstechnik für Steuerugngs- und Regelungsaufgaben eingesetzt wird. Die typischen Baugruppen einer SPS sind Zentraleinheit (CPU), Stromversorgung (SV) und diverse Ein- / Ausgabe - Baugruppen (E/A).

SSB

Einseitenband-Modulation (Single Sideband Modulation). SSB ist verwandt mit AM (Amplitudenmodulation), jedoch wird, anstelle von 2 Seitenbändern, nur ein Seitenband ausgesendet. Das spart 50% des benötigten Spektrums im HF-Kanal ohne dass hierdurch die Signal-/Datenrate beeinträchtigt wird. Für RFID-Anwendungen muß ein HF-Träger

mitgesendet werden um den Tag mit Energie zu versorgen. Bei anderen SSB-Anwendungen kann auf die Aussendung des Trägers häufig verzichtet werden, da der HF-Träger als solcher keine Information enthält.

Statischer Betrieb

Im statischen Betrieb ist der Transponder in einem festen Abstand (maximal: Grenzabstand) genau über dem Reader positioniert.

Tag

Siehe Transponder

Tag talks first

Ein passives Tag kommuniziert im Lesefeld eines Readers mit dem Reader. Wenn ein Tag das Feld eines Readers erreicht, gibt das Tag sofort seine Anwesenheit bekannt durch Reflektion eines Signals.

TARI

Abkürzung für Type A Reference Interval. Es ist die Zeitdauer (Zeitperiode) für die Darstellung eines Bits mit dem Inhalt 0.

TCP/IP

Transmission Control Protocol / Internet Protocol

Telegramm-Zyklen

Ein passives Tag kommuniziert im Lesefeld eines Readers mit dem Reader. Wenn ein Tag das Feld eines Reader erreicht, gibt das Tag sofort seine Anwesenheit bekannt durch Reflektion eines Signals.
Die Übertragung eines Lese- oder Schreibbefehls findet in drei Zyklen statt, welche "Telegramm Zyklen" genannt werden. Mit jedem Befehl kann/können ein oder zwei Byte(s) an Anwenderdaten übertragen werden. Die Quittierungs- bzw. Antwort- Übertragung (Status- oder Lese- Daten) findet in drei weiteren Zyklen statt.

Template

Das Template ist eine vorgefertigte Konfigurationsdatei (*.rf660r) in der sich alle zum Betrieb des Readers benötigten landesspezifischen Parameter wie z.B. Funk- und Tag-Protokoll Einstellungen befinden.

TNC

Stecker Bezeichnung (Threaded Neill Concelman).

Industrie Koaxialstecker mit Schraubverschluss, verwendbar für Frequenzen bis ca. 2GHz.

Transceiver (Transmitter/Receiver)

Kunstwort aus Transmitter und Receiver. Eine Einheit die elektromagnetische Wellen sowohl aussenden als auch empfangen kann.

Transponder

Ein Kunstwort aus Transmitter und Responder. Transponder werden am Produkt, Produktträger, Objekt oder dessen Transport- bzw. Verpackungseinheit angebracht und enthalten Produktions- und Fertigungsdaten, d. h. alle anwendungsspezifischen Daten. Sie begleiten das Produkt durch Montagelinien, Transfer- und Fertigungsstraßen und steuern so den Materialfluss.

Aufgrund ihres drahtlosen Aufbaus können die Transponder bei Bedarf an den einzelnen Arbeitsplätzen bzw. Fertigungsstationen individuell eingesetzt und die gespeicherten Daten von dort gelesen und ergänzt werden.

Tree walking

Siehe Reader talks first.

Übertragungsdistanz

Abstand zwischen Communication Module und Transponder

UHF

Ultra-high frequency, Frequenzbereich von 300 MHz bis 3 GHz. Typischerweise operieren UHF-RFID Tags zwischen 866 MHz und 960 MHz, welches einer Wellenlänge von ca. 33 cm entspricht.

UID

User IDentifier, die UID ist eine eindeutige Nummer im Transponder die der Hersteller vergibt. Die UID ist eindeutig und kann meist auch als Festcode verwendet werden. Wird verwendet um einen Transponder ganz gezielt anzusprechen.

Ultra High Frequency

Siehe UHF.

User IDentifier

Siehe UID

Verstimmung

UHF-Antennen sind abgestimmt um vom Reader elektromagnetische Wellen einer bestimmten Wellenlänge zu empfangen. Ist die Antenne zu nah an Metall oder an metallischem Material, kann sie verstimmt werden, wodurch die Leistung sich verschlechtert.

Verweildauer

Verweildauer ist die Zeit, in der sich der Transponder im Erfassungsbereich eines Readers aufhält. Während dieser Zeit kann der Reader Daten mit dem Transponder austauschen.

VESA

Video Electronics Standards Association (Behörde welche Standards für die PC Industrie definiert)

Walking

Siehe Reader talks first.

WLAN

Wireles LAN

Writer

Siehe Reader

XML

eXtensible markup language, XML ist eine aus SGML abgeleitete Sprache, mit der sich andere Sprachen (Dokumenttypen) beschreiben lassen. Inzwischen ist XML ein weitverbreiteter Weg um Informationen über das Internet zu verteilen. Datenaustausch zwischen Reader und Lesestation erfolgt über XML-Kommandos.

Index

A

Antenna cable
  Connector type, 165
Antenna cables, 165
  Bending radius, 165
Antenna configuration, 41
Antenna gain, 155
  Cable loss 4 dB, 155
  Dependency on room level, 155
  FCC, 155
  Frequency dependency, 155
Antenna mounting kit
  RF620R, 112
Appearance of resonance, 163

B

Beam angle, 162
  Read area, 163
Bending radius
  Antenna cables, 165

C

Cable
  Shielding, 77
Cable loss
  Definition, 164
  Dependencies, 164
Characteristic impedance
  Definition, 163
Circular polarization, 158
Classes, 173
Coaxial antenna cables
  Coaxial, 165
Configuration, 92, 113, 128
  Antennas, 41
Configuration software, 166
Connector type, 165
  R-TNC, 165
  Thread, 165
Contact partner, 320
Coupling paths, 74
Courses, 321

D

Decibel
  Calculation example, 154
  Definition, 154
  Reference variables, 154
Design of the RF660R reader, 82
Dimensions
  RF620R reader, 118
  RF630R reader, 133
  RF660R reader, 97
Directional antennas, 151
Documentation
  History, 148
  Objective, 148
  Target group, 148

E

EIRP, 152
Electromagnetic compatibility
  Coupling paths, 74
Electromagnetic interference, 72
Electromagnetic waves
  UHF range, 57
EMC Directives, 316
  Propagation of electromagnetic interference, 72
EMC Guidelines
  Avoiding interference, 75
  Basic Rules, 71
  Cable shielding, 77
  Definition, 70
  Equipotential bonding, 76
  Overview, 69
Equipotential bonding, 76
ERP, 152
  Cable loss, 153
  Logarithmic, standardized, 152
ETSI frequency bands, 318

F

France
  Channel ID, 318
  Frequency, 318
  Maximum transmit power, 318

France, regions
ETSI frequency bands, 318
Frequency hopping, 68
Front-to-back ratio, 159

G

Gate configuration
Application areas, 42
Arrangement of antenna, 42
Generations, 173

H

Half-value width
Definition, 160
ETSI, 160
History
Documentation, 148

I

Identification system
Performance Features, 25
UHF range, 21
Impedance
Definition, 156
Specifications, 156
Influence of
Interference, 57
Liquids, 58
Metals, 58
Non-metallic substances, 58
reflections, 57
Influencing factors, 149
Interfaces, 92, 113, 128
Digital, 85
RS422, 113
Interference, 57
Interference sources
Electromagnetic, 73
Isotropic radiator, 152
Isotropic spherical radiator, 155

L

Linear polarization, 159

M

Main applications
RF600, 22
RF610M, 22
RF620R, 22
RF630R, 22
RF660R, 22
RF-MANAGER, 22
Main beam direction, 159
Minimum distances
For antennas, 47
Mounting of RF620R
Antenna Mounting Kit, 112
Mounting types of the RF620R reader, 112
Mounting types of the RF630R reader, 127
Mounting types of the RF660R reader, 91

O

Objective
Documentation, 148

P

Parameter, 149
Setting, 166
Performance Features
RF600, 25
Polarization
Circular, 158
Linear, 159
Portal configuration
Example application, 41
Power supply, 88

R

Reading range
Dependency of the, 50
Reciprocity, 151
reflections, 57
Reflections, 163
Regulations applicable to UHF frequency bands
Europe, 60, 62
Return loss
Definition, 156
RF600
Main applications, 22
Performance Features, 25
RF620R reader

Configuration, 113
Design, 100
Dimensions, 118
FCC information, 120
Interfaces, 113
Mounting types, 112
Status display, 102, 123
RF630R reader
Accessories, 122
Configuration, 128
Design, 121
Dimensions, 133
FCC information, 135
IC-FCB information, 135
Interfaces, 128
Mounting types, 127
RF660A antenna
Design, 137
Mounting types, 141
Radiation/reception characteristic for Europe (ETSI), 139
Radiation/reception characteristic for USA (FCC), 140
Technical data, 147
RF660R reader
Accessories, 81
Configuration, 92
Design, 82
Dimensions, 97
Examples of mounting types, 91
FCC information, 99
interfaces, 88
Interfaces, 85, 92
Power supply, 88
Status displays, 83
RF-MANAGER
Engineering System (ES), 282
Levels of the automation/IT structure, 21
Runtime (RT), 282
RF-MANAGER Runtime (RT)
SIMATIC Microbox PC 420, 282
SIMATIC Microbox PC 427B, 282

S

Safety Information, 15
Scalar product, 152
Shielding, 77
Antenna cables, 165
Spurious lobes, 159
Status display of the RF620R reader, 102, 123
Status LEDS of the RF660R reader, 83
Structure of the RF620R reader, 100
Structure of the RF630R reader, 121

T

Target group
Documentation, 148
Technical data
RF660A antenna, 147
Technical documentation
On the Internet, 321
Technical Support, 320
Training, 321
Transponder
Classes, 173
Generations, 173
how it works, 172
Improving detection, 57

U

UHF band
China, 68

V

Voltage standing wave ratio
Definition, 156
VSWR
Definition, 156

Get more Information

www.siemens.com/simatic-sensors

Siemens AG
Industry Sector
Postfach 48 48
90026 NÜRNBERG
DEUTSCHLAND

subject to change
J31069-D0171-U001-A7-7618

© Siemens AG 2009

www.siemens.com/automation