RFID SYSTEMS

SIMATIC RF300

System Manual · 01/2009

SIMATIC Sensors

SIEMENS

SIEMENS

SIMATIC Sensors

RFID systems
SIMATIC RF300

System Manual

01/2009
A5E01642529-03

Legal information

Warning notice system

This manual contains notices you have to observe in order to ensure your personal safety, as well as to prevent damage to property. The notices referring to your personal safety are highlighted in the manual by a safety alert symbol, notices referring only to property damage have no safety alert symbol. These notices shown below are graded according to the degree of danger.

⚠ DANGER
indicates that death or severe personal injury **will** result if proper precautions are not taken.

⚠ WARNING
indicates that death or severe personal injury **may** result if proper precautions are not taken.

⚠ CAUTION
with a safety alert symbol, indicates that minor personal injury can result if proper precautions are not taken.

CAUTION
without a safety alert symbol, indicates that property damage can result if proper precautions are not taken.

NOTICE
indicates that an unintended result or situation can occur if the corresponding information is not taken into account.

If more than one degree of danger is present, the warning notice representing the highest degree of danger will be used. A notice warning of injury to persons with a safety alert symbol may also include a warning relating to property damage.

Qualified Personnel

The device/system may only be set up and used in conjunction with this documentation. Commissioning and operation of a device/system may only be performed by **qualified personnel**. Within the context of the safety notes in this documentation qualified persons are defined as persons who are authorized to commission, ground and label devices, systems and circuits in accordance with established safety practices and standards.

Proper use of Siemens products

Note the following:

⚠ WARNING
Siemens products may only be used for the applications described in the catalog and in the relevant technical documentation. If products and components from other manufacturers are used, these must be recommended or approved by Siemens. Proper transport, storage, installation, assembly, commissioning, operation and maintenance are required to ensure that the products operate safely and without any problems. The permissible ambient conditions must be adhered to. The information in the relevant documentation must be observed.

Trademarks

All names identified by ® are registered trademarks of the Siemens AG. The remaining trademarks in this publication may be trademarks whose use by third parties for their own purposes could violate the rights of the owner.

Disclaimer of Liability

We have reviewed the contents of this publication to ensure consistency with the hardware and software described. Since variance cannot be precluded entirely, we cannot guarantee full consistency. However, the information in this publication is reviewed regularly and any necessary corrections are included in subsequent editions.

Siemens AG
Industry Sector
Postfach 48 48
90026 NÜRNBERG
GERMANY

A5E01642529-03
℗ 01/2009

Copyright © Siemens AG 2005, 2009.
Technical data subject to change

Table of contents

Introduction 1

1.1 Navigating in the system manual

Structure of contents	Contents
Table of contents	Organization of the documentation, including the index of pages and chapters
Introduction	Purpose, layout and description of the important topics.
Safety instructions	Refers to all the valid technical safety aspects which have to be adhered to while installing, commissioning and operating from the product/system view and with reference to statutory regulations.
System overview	Overview of all RF identification systems, system overview of SIMATIC RF300
RFID system planning	Information about possible applications of SIMATIC RF300, support for application planning, tools for finding suitable SIMATIC RF300 components.
Readers	Description of readers which can be used for SIMATIC RF300
RF300 transponder	Description of RF300 transponders which can be used for SIMATIC RF300
ISO transponder	Description of ISO transponders which can be used for SIMATIC RF300
System integration	Overview of the communication modules and function blocks that can be used for SIMATIC RF300
System diagnostics	Description of system diagnostics available for SIMATIC RF300
Appendix	• Certificates and approvals • Accessories • Connecting cable • Ordering data • Service & Support

1.2 Preface

Purpose of this document

This system manual contains all the information needed to plan and configure the system.

It is intended both for programming and testing/debugging personnel who commission the system themselves and connect it with other units (automation systems, further programming devices), as well as for service and maintenance personnel who install expansions or carry out fault/error analyses.

Scope of validity of this document

This documentation is valid for all supplied variations of the SIMATIC RF300 system and describes the state of delivery as of January 2009.

Conventions

The following terms/abbreviations are used synonymously in this document:

- Reader, read/write device, write/read device
- Tag, transponder, mobile data memory, data carrier, MDS
- Communication module, interface module, ASM

History

Currently released versions of the SIMATIC RF300 system manual:

Edition	Remark
05/2005	First Edition
11/2005	Revised edition, components added: RF310R with RS422 interface, RF350T and RF360T; ASM 452, ASM 456, ASM 473 and ASM 475
04/2006	Revised edition, components added: RF340R as well as RF350R with the antenna types ANT 1, ANT 18 and ANT 30
12/2006	Revised edition, components added: RF370T, RF380T and RF170C
07/2007	Revised edition, degrees of protection changed for the RF300 reader
09/2007	Revised edition, components added: RF380R and RF180C
06/2008	Revised edition
01/2009	Revised edition, expanded by the reader functions "RF300 Tags" and "ISO Tags" for the SIMATIC RF310R and SIMATIC RF380R readers

Declaration of conformity

The EC declaration of conformity and the corresponding documentation are made available to authorities in accordance with the EC directives stated above. Your local sales representative can provide these on request.

Observance of installation guidelines

The installation guidelines and safety instructions given in this documentation must be followed during commissioning and operation.

Safety information

2

SIMATIC RFID products comply with the salient safety specifications to IEC, VDE, EN, UL and CSA. If you have questions about the validity of the installation in the planned environment, please contact your service representative.

CAUTION
Alterations to the devices are not permitted. Failure to observe this requirement shall constitute a revocation of the radio equipment approval, CE approval and manufacturer's warranty.

Repairs

Repairs may only be carried out by authorized qualified personnel.

⚠ WARNING
Unauthorized opening of and improper repairs to the device may result in substantial damage to equipment or risk of personal injury to the user.

System expansion

Only install system expansion devices designed for this device. If you install other upgrades, you may damage the system or violate the safety requirements and regulations for radio frequency interference suppression. Contact your technical support team or your sales outlet to find out which system upgrades are suitable for installation.

CAUTION
If you cause system defects by installing or exchanging system expansion devices, the warranty becomes void.

System overview

3

3.1 RFID systems

RFID systems from Siemens control and optimize material flow. They identify reliably, quickly and economically, are insensitive to contamination and store data directly on the product.

Identification system	Frequency	Range, max.	Max. memory	Data transfer rate (typical) in byte/s	Temperature, max.	Special features
RF300	13.56 MHz	0.15 m	20 byte EEPROM, 64 KB FRAM	**RF300 tags:** 8000 **ISO tags**: 400/600	**Readers**: -25 °C to +70 °C **Transponder**: -40 °C to +85 °C +220 °C cyclic	IQ-Sense interface available; integrated diagnostic functions; battery-free data memory; additional ISO 15693 functionality (RF310R/RF380R)
MOBY D	13.56 MHz	0.8 m	112 byte EEPROM	110	+ 85 °C or + 200 °C	SmartLabels based on ISO 15693 e.g. Tag-it/I-Code
MOBY E	13.56 MHz	0,1 m	752 byte EEPROM	350	+ 150 °C	Battery-free data memory
MOBY I	1.81 MHz	0.15 m	32 KB FRAM	1250	+ 85 °C or + 220 °C cyclic	Battery-free data memory

3.2 SIMATIC RF300

3.2.1 RF300 system overview

SIMATIC RF300 is an inductive identification system specially designed for use in industrial production for the control and optimization of material flow.

Thanks to its compact dimensions, RF300 is the obvious choice where installation conditions are restricted, especially for assembly lines, handling systems and workpiece carrier systems. RF300 is suitable for both simple and demanding RFID applications and it stands out for its persuasive price/performance ratio.

With the cost-effective IQ-Sense interface, RF300 provides an especially favorable solution concept for low-performance applications.

If you would like to use cost-effective ISO tags, the medium-performance application provides a solution for this.

The high-performance components of RF300 provide advantages in terms of high data transmission rates and storage capacities.

Table 3- 1 Overview of RF300 low-, medium- and high-performance components

System components	RF300 for low-performance applications	RF300 for medium performance Applications with ISO-15693 tags	RF300 for high-performance applications
Communication modules	8xIQ-Sense for ET 200M (PROFIBUS) and for direct connection to an S7-300	• ASM 452 • ASM 456 • ASM 473 (PROFIBUS) • ASM 475 (S7 300/ET 200M) • RF170C • RF180C	• ASM 452 • ASM 456 • ASM 473 (PROFIBUS) • ASM 475 (S7 300/ET 200M) • RF170C • RF180C
Readers	• RF310R with IQ-Sense interface	• RF310R with RS422 interface • RF380R	• RF310R with RS422 interface • RF340R • RF350R • RF380R
Transponder	• RF320T • RF340T • RF350T • RF360T	• MDS D100 • MDS D124 • MDS D139[1)] • MDS D160[2)] • MDS D324	• RF320T • RF340T • RF350T • RF360T • RF370T • RF380T

1) only with the MLFB 6GT2600-0AA10

2) only with the MLFB 6GT2600-0AB10

RF300 is ready for multi-tag operation, but in this expansion stage, only the faster single-tag operation is possible.

3.2.2 RFID components and their function

System components overview

Component	Description
Communication module	A communication module (interface module) is used to integrate the RF identification system in controllers/automation systems.
Readers	The reader (read/write device) ensures inductive communication and power supply to the transponder, and handles the connection to the various controllers (e.g. SIMATIC S7) through the communication module (e.g. ASM 475).
Transponder	The transponder (data memory) stores all data relevant to the production process and is used, for example, instead of barcode.

RF300 system components for low- and high-performance applications

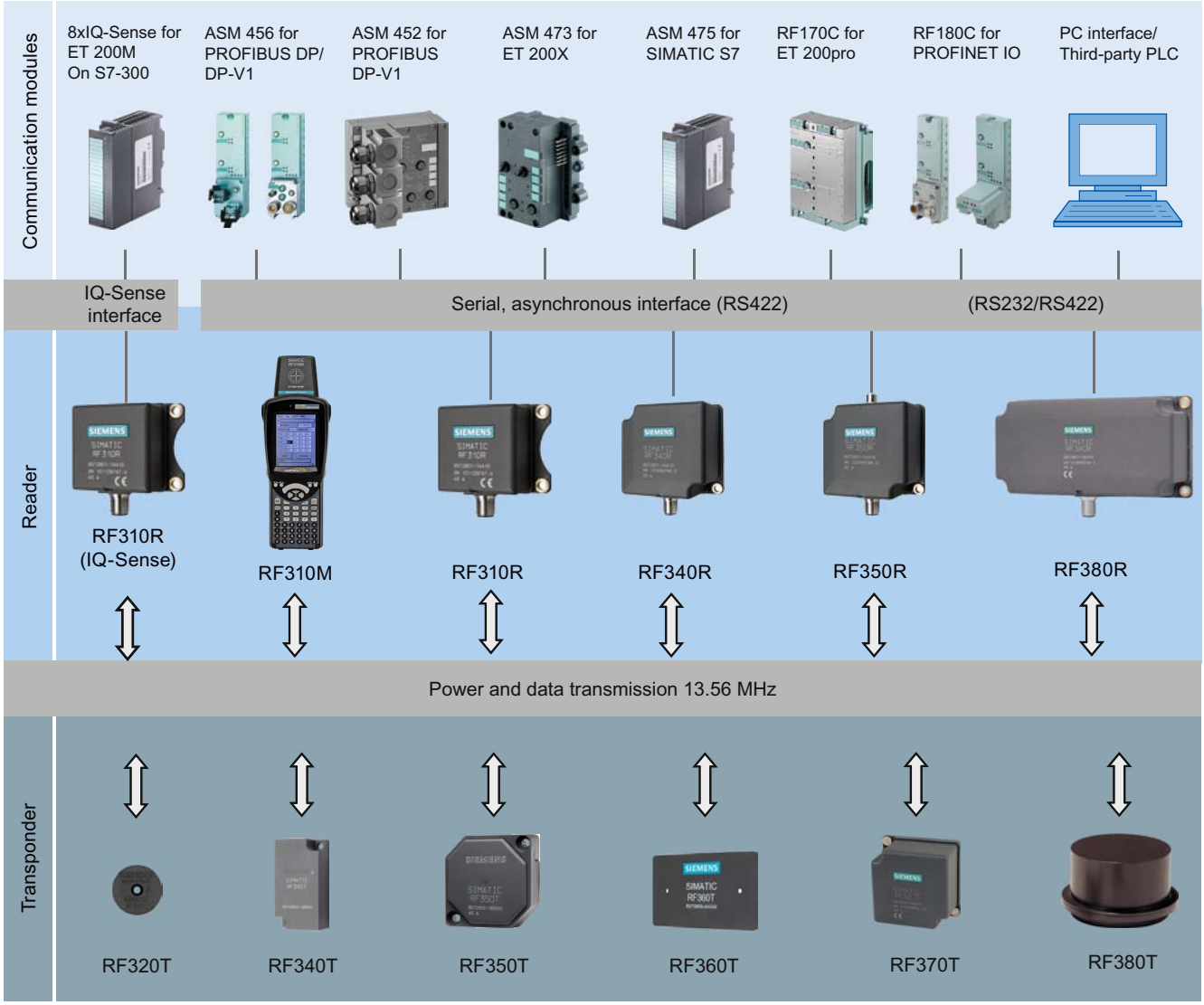

Figure 3-1 System overview low- and high-performance

Table 3- 2 Reader-tag combination options for low- and high-performance applications

Tags/ MDS	RF310R (IQ-Sense)	RF310R (RS422)	RF340R	RF350R with ANT 1	RF350R with ANT 18	RF350R with ANT 30	RF380R
RF320T	✓	✓	✓	✓	✓	✓	✓
RF340T	✓	✓	✓	✓	✓	✓	✓
RF350T	✓	✓	✓	✓	--	✓	✓
RF360T	✓	✓	✓	✓	--	--	✓
RF370T	○	○	✓	✓	--	--	✓
RF380T	○	○	✓	✓	--	--	✓

✓ Combination possible
-- Combination not approved
○ Combination possible, but not recommended

RF300 system components for medium-performance applications

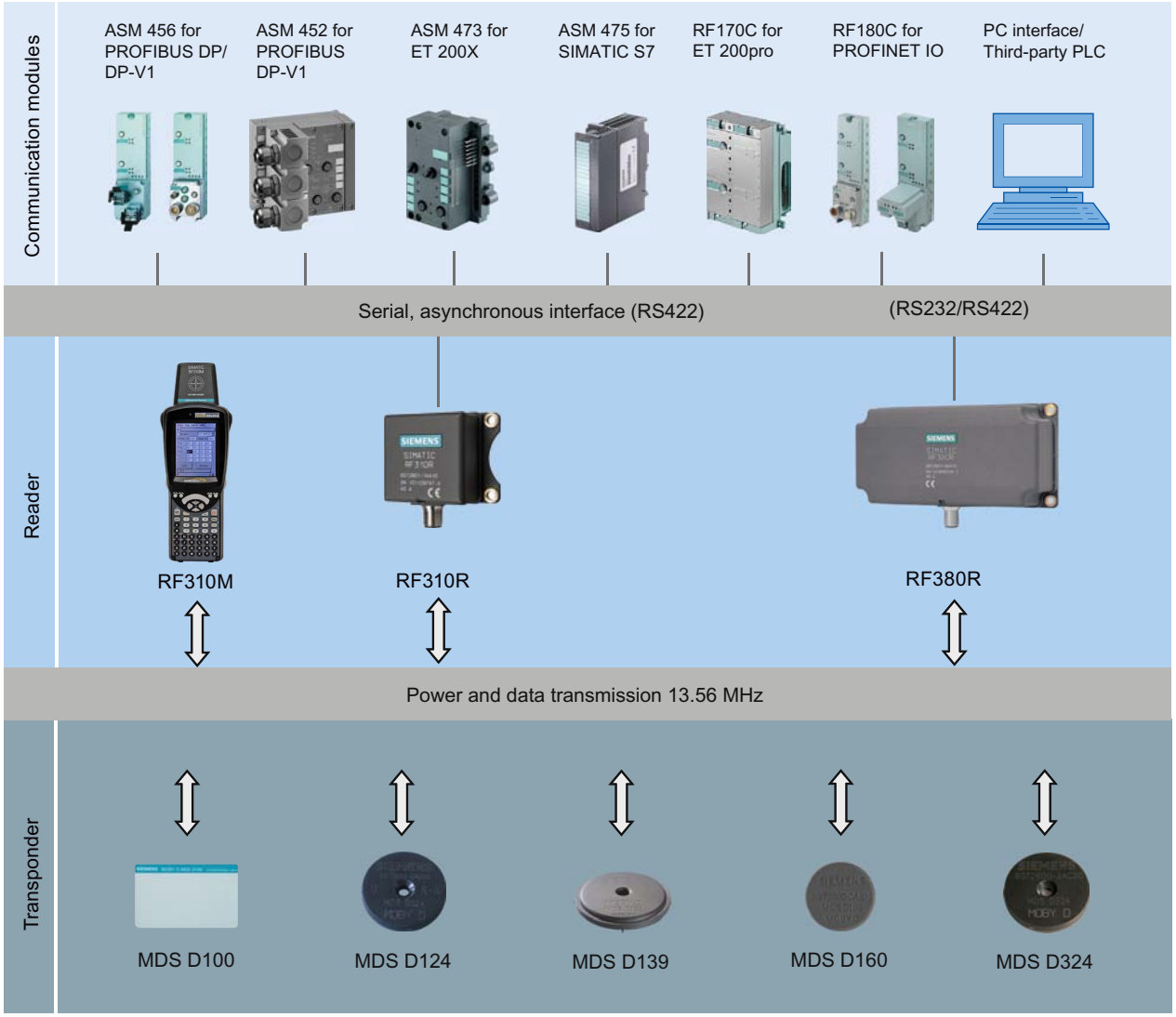

Figure 3-2 System overview medium-performance

Table 3- 3 Reader-tag combination options for medium-performance applications

Tags/ MDS	RF310R (IQ-Sense)	RF310R (RS422)	RF340R	RF350R with ANT 1	RF350R with ANT 18	RF350R with ANT 30	RF380R
MDS D100	--	✓	--	--	--	--	✓
MDS D124	--	✓	--	--	--	--	✓
MDS D139	--	○	--	--	--	--	✓
MDS D160	--	✓	--	--	--	--	✓
MDS D324	--	✓	--	--	--	--	✓

✓ Combination possible
-- Combination not approved
○ Combination possible, but not recommended

Note

ISO15693 is only possible with MLFB 6GT2801-xxBxx readers.

Conventions

The RF310R, RF340R and RF380R readers are equipped with an integral antenna, whereas the RF350R reader is operated over an external antenna. In this system manual, the term "Reader" is used throughout even where it is actually referring to the antenna of the reader.

3.2.3 Application areas of RF300

SIMATIC RF300 is primarily used for non-contact identification of containers, palettes and workpiece holders in a closed production circuit. The data carriers (transponders) remain in the production chain and are not supplied with the products. SIMATIC RF300, with its compact transponder and reader enclosure dimensions, is particularly suitable in confined spaces.

Main applications

- Mechanical engineering, automation systems, conveyor systems
- Ancillary assembly lines in the automotive industry, component suppliers
- Small assembly lines

Application examples

- Production lines for engines, gearboxes, axles, etc.
- Assembly lines for ABS systems, airbags, brake systems, doors, cockpits, etc.
- Assembly lines for household electrical appliances, consumer electronics and electronic communication equipment
- Assembly lines for PCs, small-power motors, contactors, switches

Advantages

- Reading and writing of large data volumes within a short time results in shorter production cycle times and thus help to boost productivity
- Can be used in harsh environments thanks to rugged components with high degree of protection
- Simple and low-cost system integration into SIMATIC S7 and PROFIBUS (TIA)
- Shorter commissioning times and fewer plant failures and downtimes thanks to integral diagnostic functionalities
- Cost savings thanks to maintenance-free components

3.3 System configuration

3.3.1 Overview

The SIMATIC RF300 system is characterized by a high level of standardization of its components. This means that the system follows the TIA principle throughout: Totally Integrated Automation. It provides maximum transparency at all levels with its reduced interface overhead. This ensures optimum interaction between all system components.

The RF300 system with its flexible components offers many possibilities for system configuration. This chapter shows you how you can use the RF300 components on the basis of various example scenarios.

3.3.2 Assembly line example: Use of RF300 tags

In assembly lines, such as in engine manufacturing, many work steps are completed in succession. Automated or manual assembly work is carried out at the individual workstations in relatively short periods of time. The special features of the RF300 tags, which stand out for their large data memory and high transmission speeds, bring about many advantages in regard to the production unit numbers of such plants.

The possibility of saving large volumes of data means savings in terms of data management on the HOST system and considerably contributes to data security. (redundant data management, e.g. HOST database, or controller and data carrier)

Advantages at a glance:

- Redundant data storage on the basis of large memory, availability of decentralized data
- High data rate
- Data management savings on the host system

Characteristics of the scenario

In this example scenario, engine blocks that are placed on metal pallets are conveyed on an assembly line. The engines are assembled piece-by-piece at the individual workstations. The SIMATIC RF340T RFID tag is securely affixed on the underside of the pallet. The transport speed is approx. 0.5 m/s.

In this scenario, it is an advantage that the tag can be directly secured to metal on the metal pallets. The small-dimensioned SIMATIC RF310R reader is integrated in the conveyor elements in such a manner that it can communicate with the tags from below. Thus, it is not necessary to align the pallets or to attach several tags.

The data of the entire production order (5000 bytes) is stored on the tag. This data is read at each workstation and changed or supplemented depending on the workstation, and then written back again. Thus, the status of the engine block assembly can be determined at any point in time, even if there is a failure at the HOST level.

Thanks to the extremely high data rate, a very short cycle time for the work steps can be factored in, which results in high end product unit numbers (engines).

The entire production order that is saved on the tag can also be manually read via the WIN-LC terminal located at each workstation. This means that virtually no additional data management is required on the control PC.

The production order data can also be read for servicing purposes via the mobile SIMATIC RF310M handheld terminal.

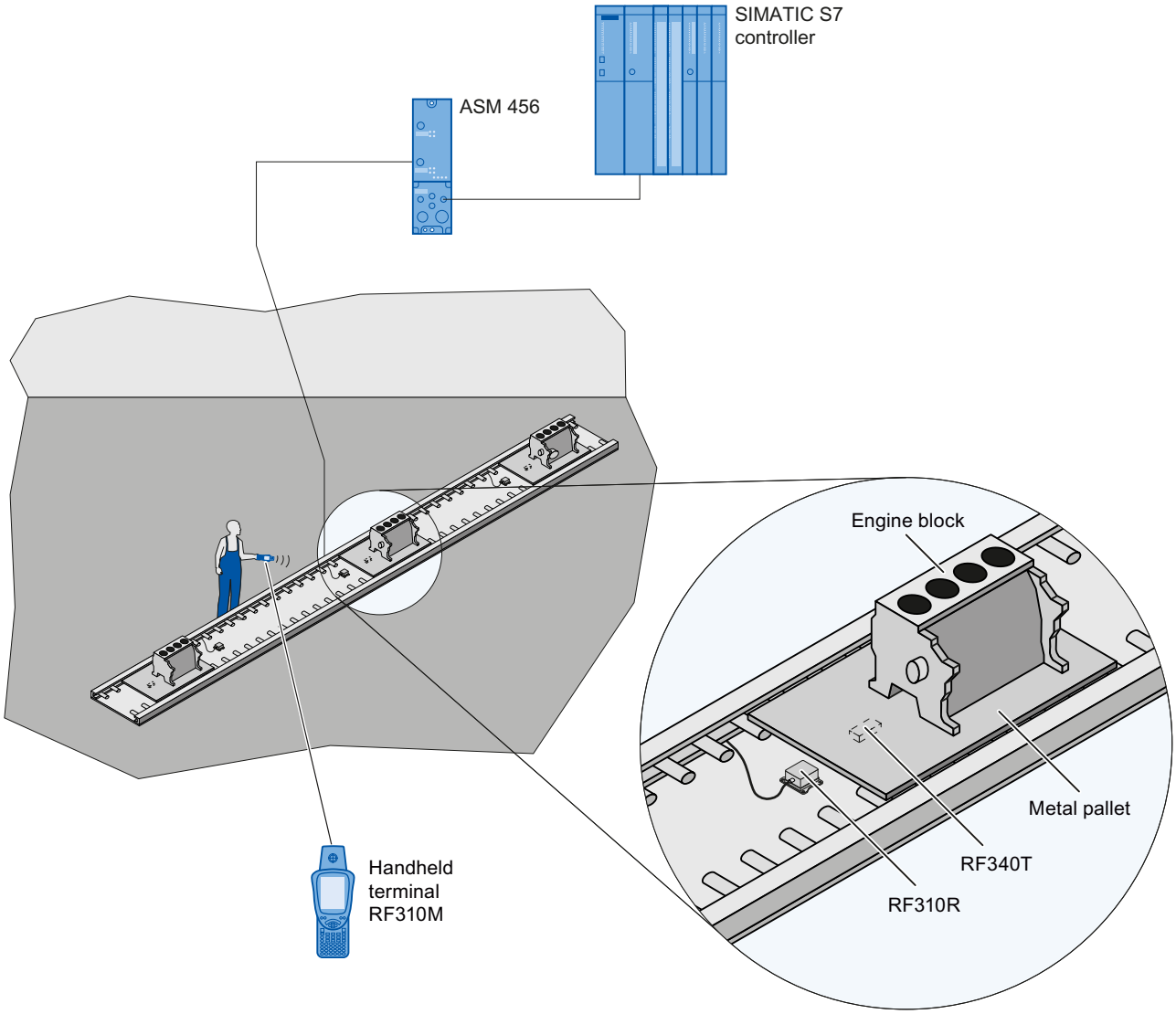

Figure 3-3 Example of engine block production

3.3.3 Example of container and paper board container handling: Use of ISO tags

Containers of varying sizes are conveyed to picking workstations in a delivery center. There, the individual goods are removed and packed in cartons according to the delivery note. These cartons are marked with low-cost transponder labels and sorted to small or large packaging workstations (according to the delivery note) by being guided or transported via the corresponding conveyor system. The containers are marked using the MDS D100 ISO tag.

Advantages at a glance:

- Decision points in the conveyor system can be installed in a more favorable way (mechanically)
- Different sizes of containers with different depths can be identified due to the range
- In contrast to bar codes, tags can also be written to
- Different types of tags can be processed using one and the same reader

Characteristics of the scenario

In this example scenario, containers of varying sizes are conveyed on a conveyor system. Only the unique identification number (8 bytes) is read. The containers to be picked are sorted to the corresponding workstations. The maximum transport speed is 1.0 m/s.

In this scenario, it is an advantage that the RF380R reader can read and write the tags at different distances on the containers without a great deal of mechanical or control system effort due to the reading range.

During the picking process, the goods are immediately placed in different containers or packed in cartons depending on the destination (small packaging or large packaging station). The containers are equipped with the MDS D100 ISO tag. The low-cost "one-way tag" (label) is used on the cartons: it is simply glued onto the carton. Thus the goods can be identified at any time. Again, one and the same reader is used for this. The maximum transport speed is 0.8 m/s.

In addition, flexible identification is possible at each location and at any time using the mobile SIMATIC RF310M handheld terminal.

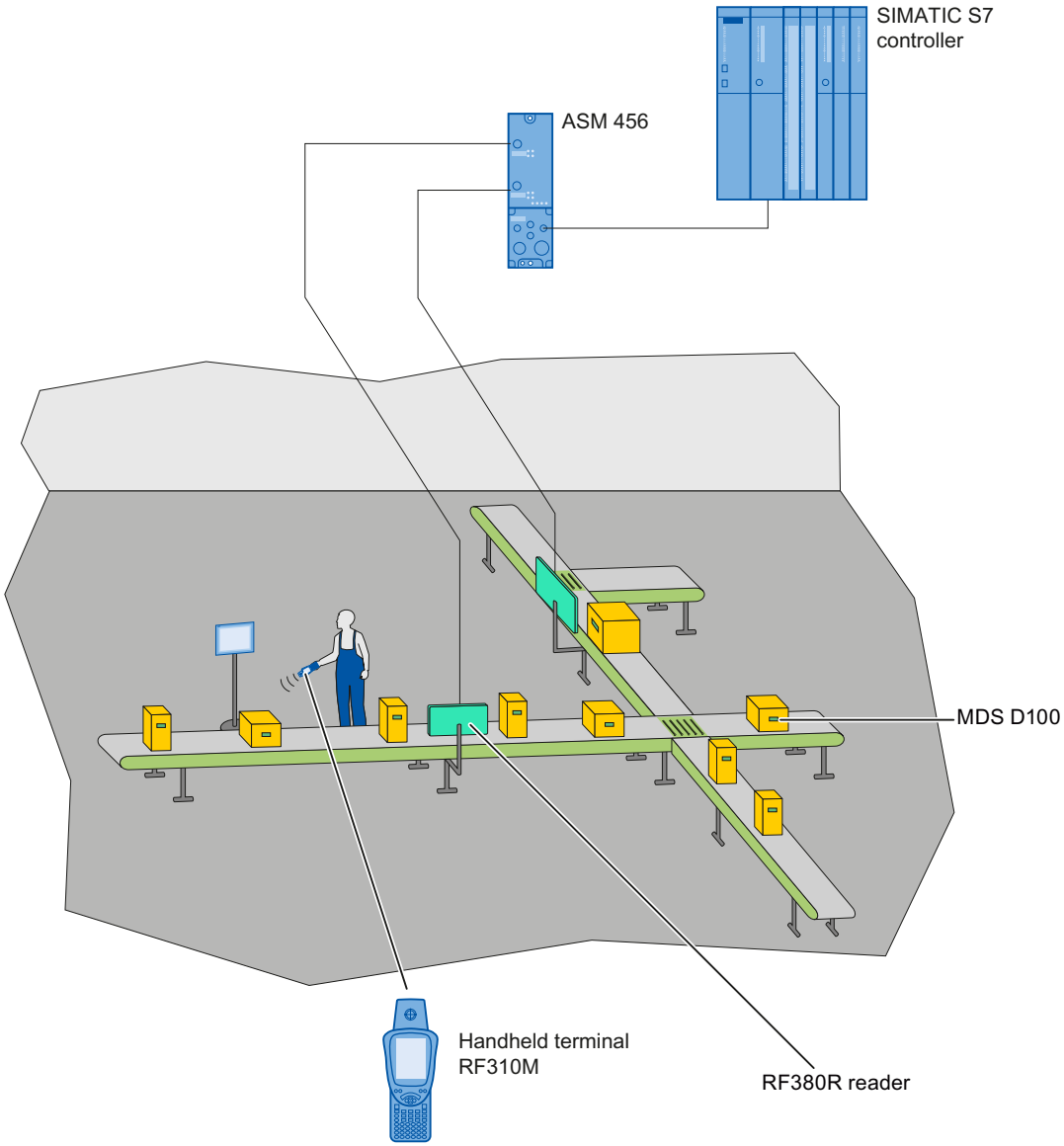

Figure 3-4 Example of container and paper board container handling

3.4 System data

Table 3- 4

Type	Inductive identification system for industrial applications		
Transmission frequency data/energy	13.56 MHz		
Memory capacity	• 20 bytes to 64 KB user memory (r/w) • 4 bytes fixed code as serial number (ro)		
Memory type	EEPROM / FRAM		
Write cycles	• EEPROM: > 200 000 • FRAM: Unlimited		
Read cycles	Unlimited		
Data management	Byte-by-byte access		
Data transmission rate Transponder reader		**RF300 tags**	**ISO tags**
	Read	approx. 8000 bytes/s	approx. 600 bytes/s
	Write	approx. 8000 bytes/s	approx. 400 bytes/s
Read/write distance (system limit; depends on reader and transponder)	• RF300 tags: up to 0.15 m • ISO tags: up to 0.2 m		
Operating temperature	**Readers:**	-25 to +70 °C	
	Transponder:	-40 to +125 °C +220 °C cyclically	
Degree of protection	Reader: IP 67 [2] Transponder: > IP 67		
Can be connected to	• SIMATIC S7-300 • PROFIBUS DP V1 • PROFINET • PC [1] • Third-party control [1]		
Special features	• High noise immunity • Compact components • Extensive diagnostic options • A reader with IQ-Sense interface • ISO 15693 functionality can be parameterized		
Approvals	• ETS 300 330 (Europe) • FCC Part 15 (USA), • UL/CSA CE, • operating license for Japan		

[1] By means of RS422 interface and 3964R protocol
[2] Exception RF350R: IP 65

RF300 system planning

4

4.1 Fundamentals of application planning

4.1.1 Selection criteria for SIMATIC RF300 components

Assess your application according to the following criteria, in order to choose the right SIMATIC RF300 components:

- Transmission distance (read/write distance)
- Tracking tolerances
- Static or dynamic data transfer
- Data volume to be transferred
- Speed in case of dynamic transfer
- Metal-free rooms for transponders and readers
- Ambient conditions such as relative humidity, temperature, chemical impacts, etc.

4.1.2 Transmission window and read/write distance

The reader generates an inductive alternating field. The field is strongest near to the reader. The strength of the field decreases in proportion to the distance from the reader. The distribution of the field depends on the structure and geometry of the antennas in the reader and transponder.

A prerequisite for the function of the transponder is a minimum field strength at the transponder achieved at a distance S_g from the reader or the ANT1. The picture below shows the transmission window between transponder and reader or ANT1:

Table 4- 1 RF310R reader and ANT1 (RF350R) transmission window and read/write distance

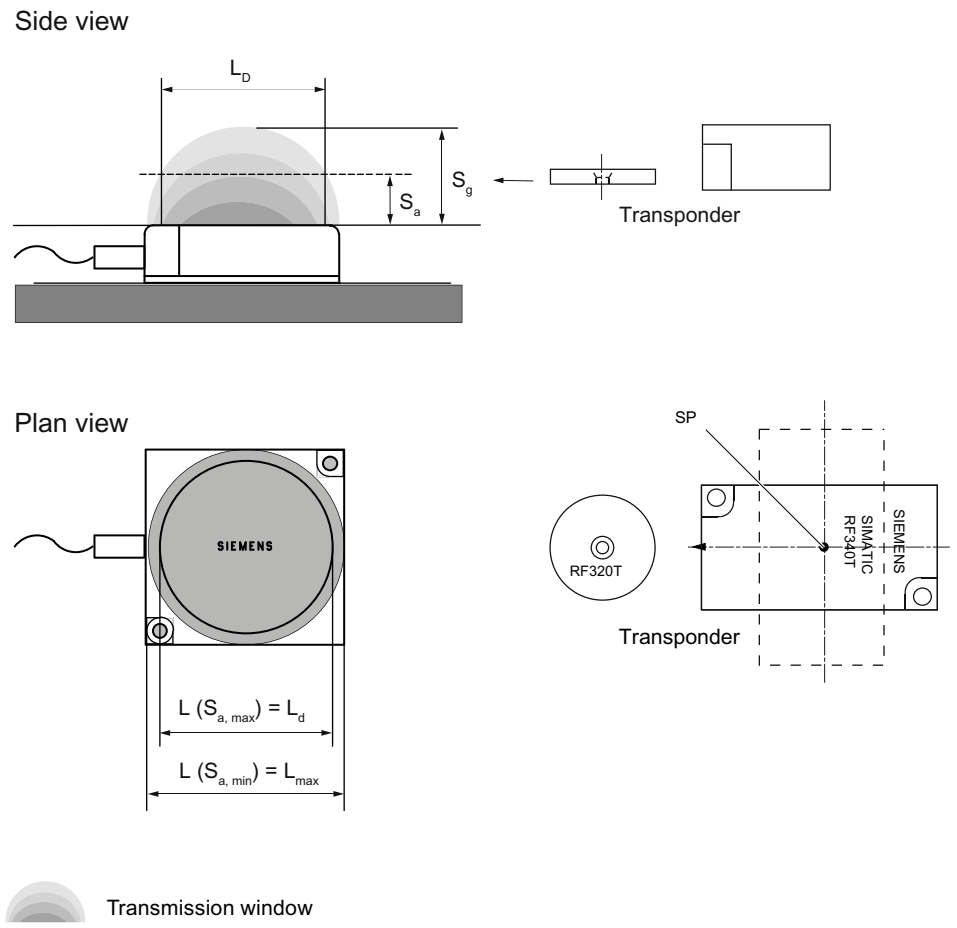

S_a:	Operating distance between transponder and reader
S_g	Limit distance (maximum clear distance between upper surface of the reader and the transponder, at which the transmission can still function under normal conditions)
L	Length of a transmission window The length L_d is valid for the calculation. At $S_{a,min}$, the field length increases from L_d to L_{max}.
SP	Intersection of the axes of symmetry of the transponder

Table 4- 2 RF340R reader transmission window and read/write distance

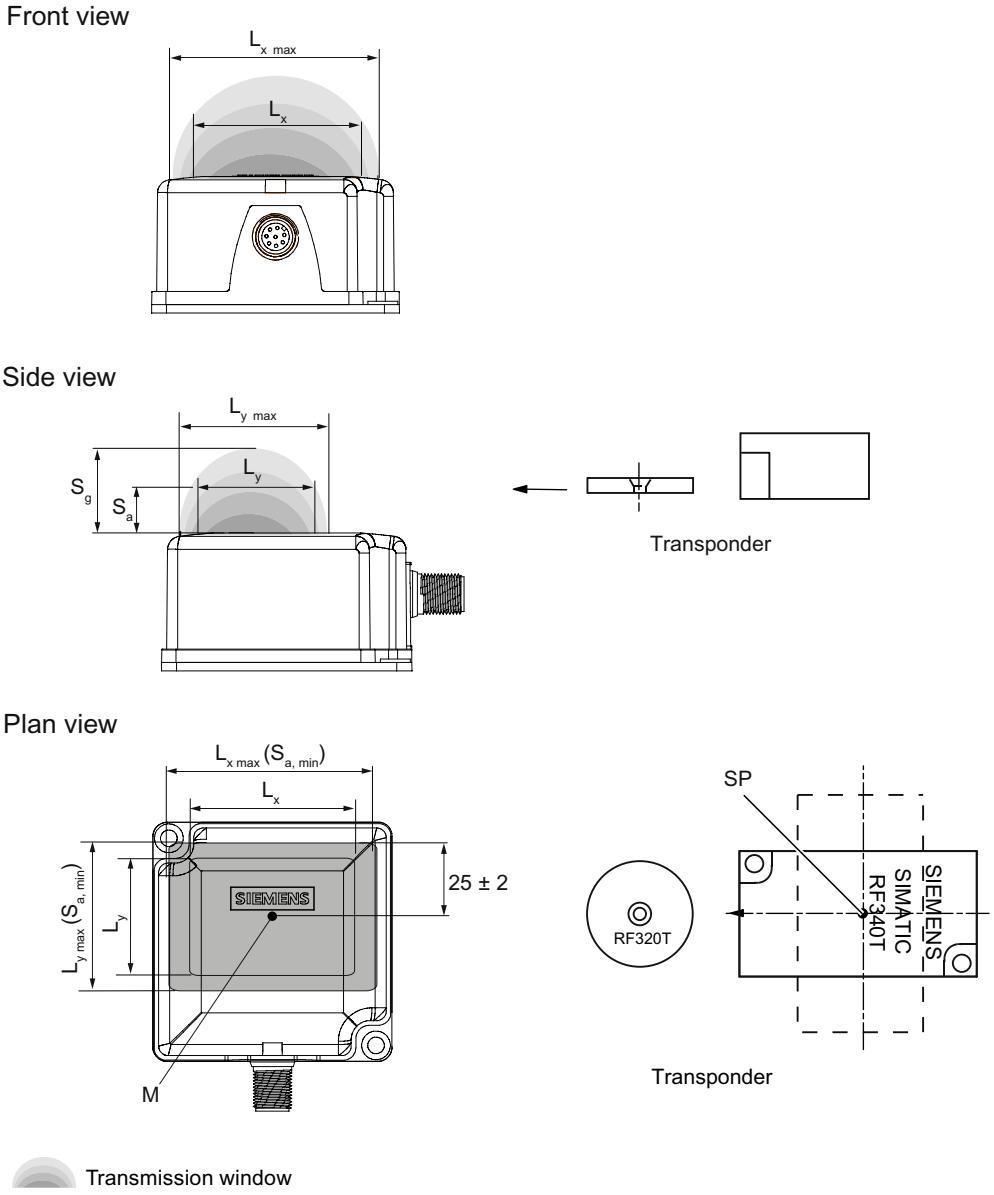

All dimensions in mm.

S_a:	Operating distance between transponder and reader
S_g	Limit distance (maximum clear distance between upper surface of the reader and the transponder, at which the transmission can still function under normal conditions)
L_x	Length of a transmission window in the x direction The length L_x is valid for the calculation. At $S_{a,min}$, the field length increases from L_x to L_{max}.
L_y	Length of a transmission window in the y direction The length L_y is valid for the calculation. At $S_{a,min}$, the field length increases from L_y to $L_{y\,max}$.
M	Field centerpoint

Table 4- 3 ANT18 and ANT30 (RF350R) transmission window and read/write distance

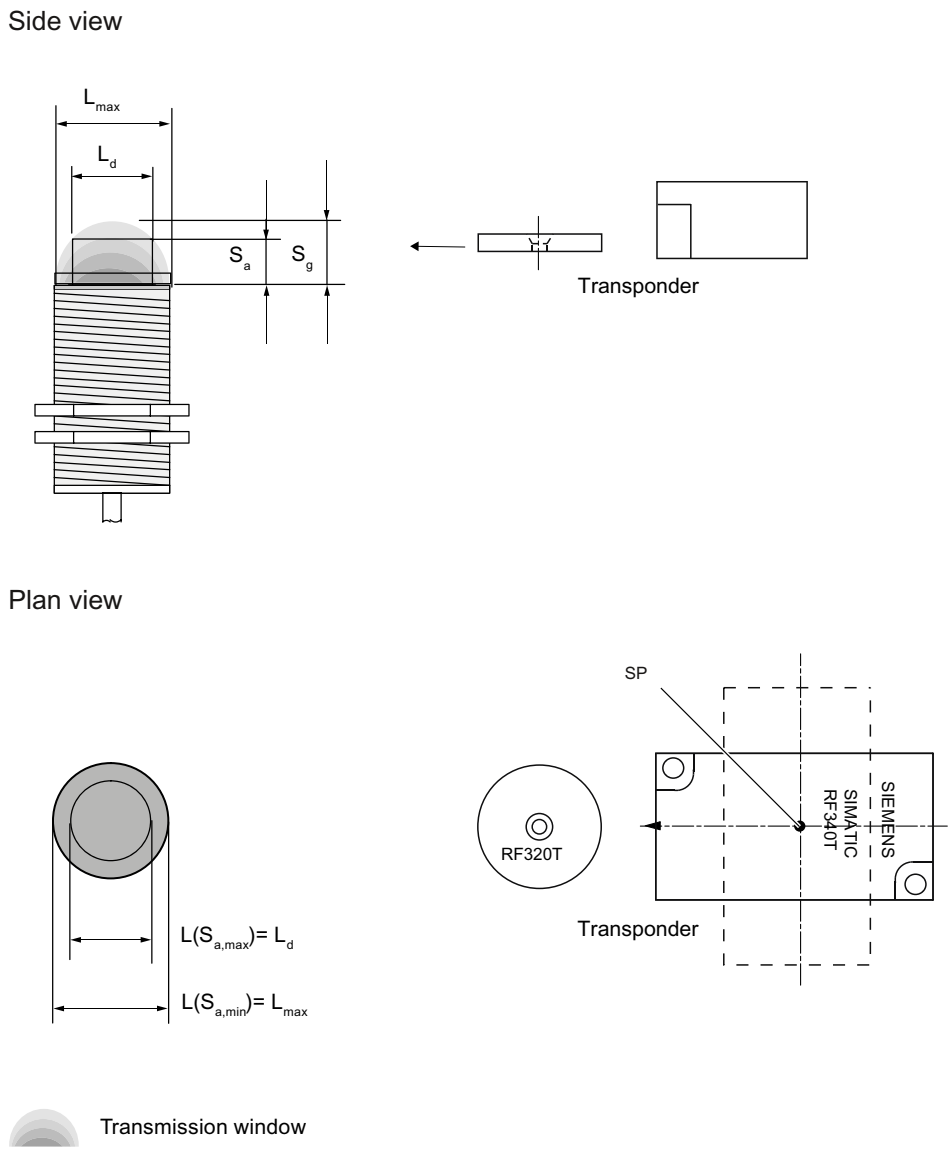

S_a:	Operating distance between transponder and reader
S_g	Limit distance (maximum clear distance between upper surface of the reader and the transponder, at which the transmission can still function under normal conditions)
L	Diameter of a transmission window The length L_d is valid for the calculation. At $S_{a,min}$, the field length increases from L_d to L_{max}.
SP	Intersection of the axes of symmetry of the transponder

Table 4- 4 RF380R reader transmission window and read/write distance

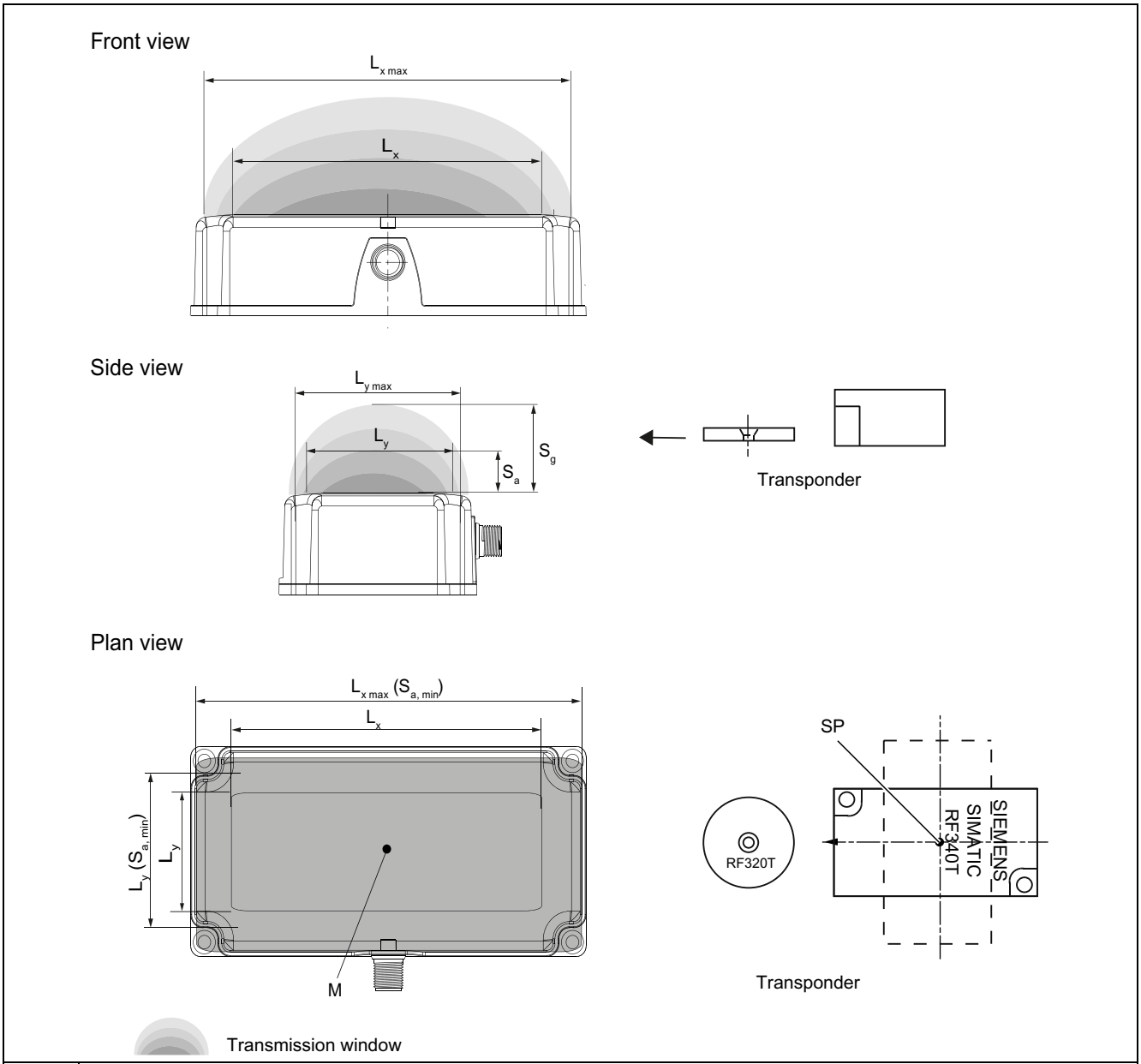

S_a:	Operating distance between transponder and reader
S_g	Limit distance (maximum clear distance between upper surface of the reader and the transponder, at which the transmission can still function under normal conditions)
L	Length of a transmission window The length L_D is valid for the calculation. At $S_{a,min}$, the field length increases from L_D to L_{max}.
M	Field centerpoint

The transponder can be used as soon as the intersection (SP) of the transponder enters the area of the transmission window.

From the diagrams above, it can also be seen that operation is possible within the area between S_a and S_g. The active operating area reduces as the distance increases, and shrinks to a single point at distance S_g. Only static mode should thus be used in the area between S_a and S_g.

4.1.3 Width of the transmission window

Determining the width of the transmission window

The following approximation formula can be used for practical applications:

$$B = 0.4 \cdot L$$

B: Width of the transmission window
L: Length of the transmission window

Tracking tolerances

The width of the transmission window (B) is particularly important for the mechanical tracking tolerance. The formula for the dwell time is valid without restriction when B is observed.

4.1.4 Impact of secondary fields

Secondary fields in the range from 0 to 20 mm always exist.
They should only be applied during planning in exceptional cases, however, since the read/write distances are very limited. Exact details of the secondary field geometry cannot be given, since these values depend heavily on the operating distance and the application.

Secondary fields without shielding

The following graphic shows typical primary and secondary fields, if no shielding measures are taken.

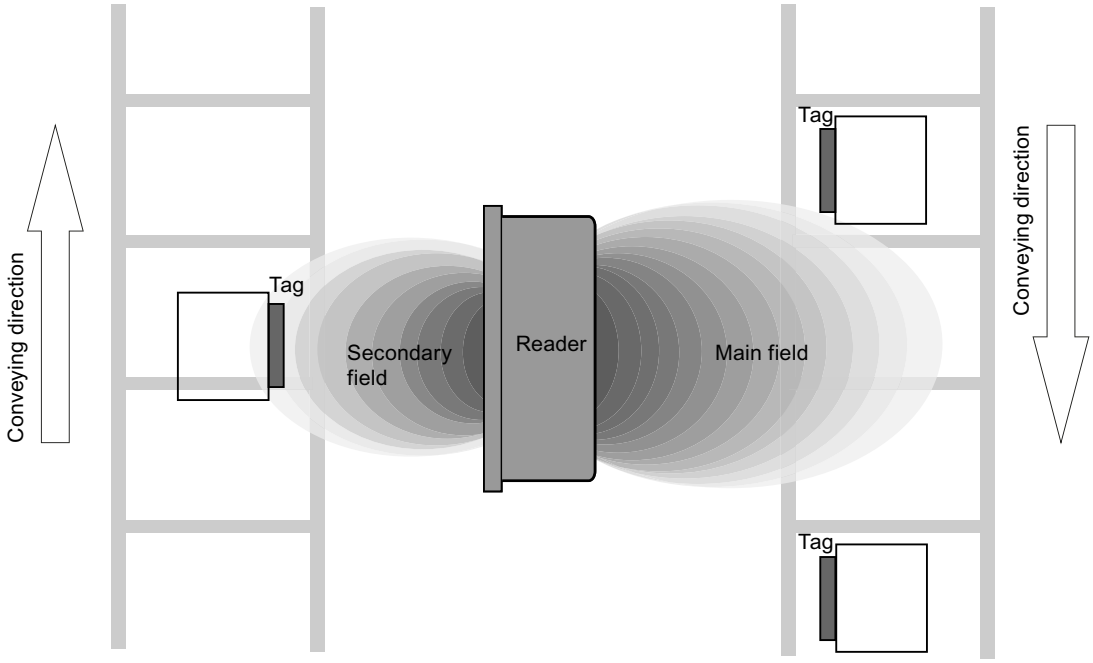

Figure 4-1 Secondary field without shielding

In this arrangement, the reader can also read tags via the secondary field. Shielding is required in order to prevent unwanted reading via the secondary field, as shown and described in the following.

Secondary fields with shielding

The following graphic shows typical primary and secondary fields, with metal shielding this time.

The metal shielding prevents the reader from detecting tags via the secondary field.

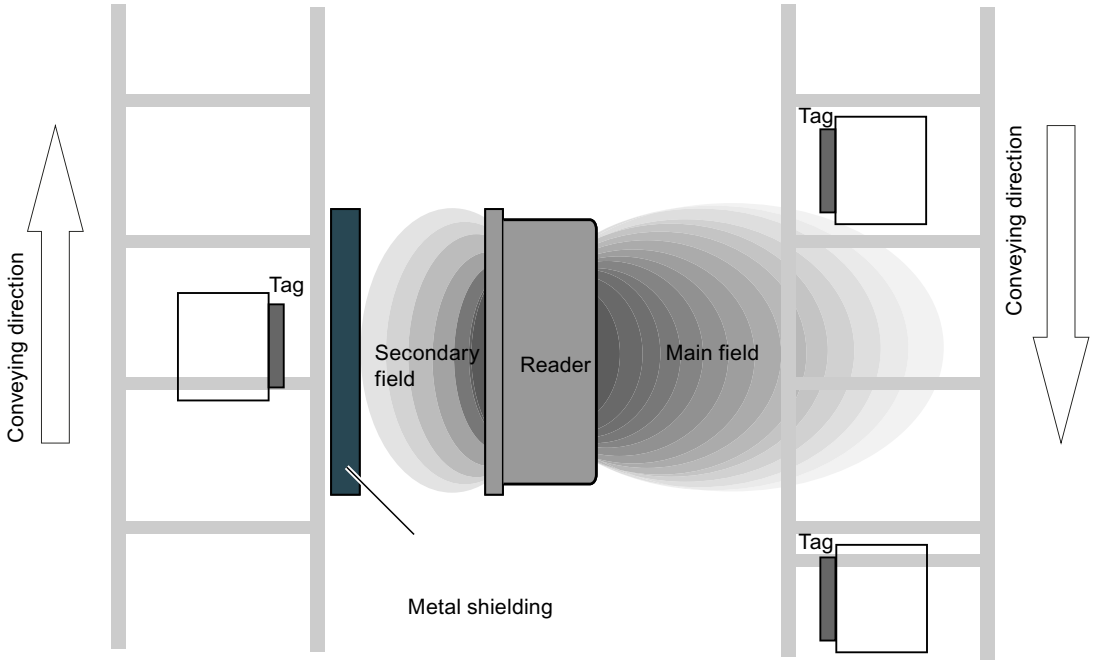

Figure 4-2 Secondary field with shielding

4.1.5 Permissible directions of motion of the transponder

Detection area and direction of motion of the transponder

The transponder and reader have **no** polarization axis, i.e. the transponder can come in from any direction, be placed at any position, and cross the transmission window. The figure below shows the active area for various directions of transponder motion:

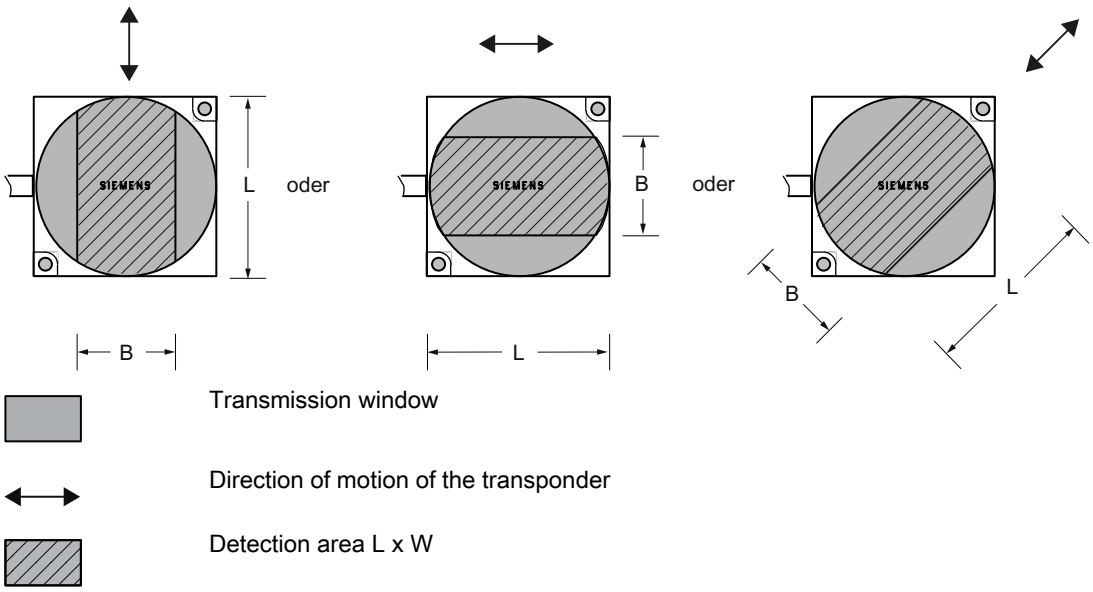

Figure 4-3 Detection areas of the reader for different directions of transponder motion

4.1.6 Operation in static and dynamic mode

Operation in static mode

If working in static mode, the transponder can be operated up to the limit distance (S_g). The transponder must then be positioned exactly over the reader:

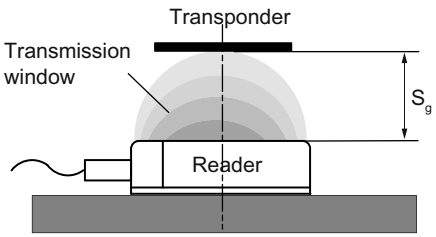

Figure 4-4 Operation in static mode

Operation in dynamic mode

When working in dynamic mode, the transponder moves past the reader. The transponder can be used as soon as the intersection (SP) of the transponder enters the circle of the transmission window. In dynamic mode, the operating distance (S_a) is of primary importance. [Operating distances, see Chapter Field data for transponders, readers and antennas (Page 44)]

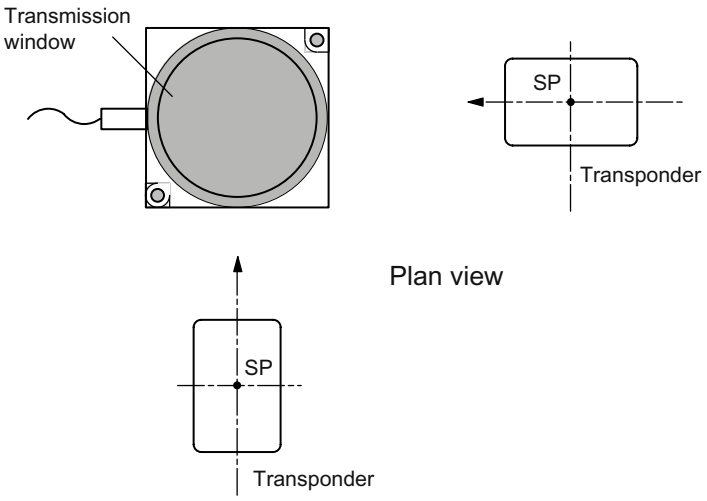

Figure 4-5 Operation in dynamic mode

4.1.7 Dwell time of the transponder

The dwell time is the time in which the transponder remains within the transmission window of a reader. The reader can exchange data with the transponder during this time.

The dwell time is calculated thus:

$$t_v = \frac{L \cdot 0,8\,[m]}{v_{Tag}\,[m/s]}$$

t_V:	Dwell time of the transponder
L:	Length of the transmission window
v_{Tag}:	Speed of the transponder (tag) in dynamic mode
0,8:	Constant factor used to compensate for temperature impacts and production tolerances

The dwell time can be of any duration in static mode. The dwell time must be sufficiently long to allow communication with the transponder.

The dwell time is defined by the system environment in dynamic mode. The volume of data to be transferred must be matched to the dwell time or vice versa. In general:

$$t_v \geq t_K$$

t_V:	Dwell time of the data memory within the field of the reader
t_K:	Communication time between transponder and communication module

4.1.8 Communication between communication module, reader and transponder

Communication between the communication module, reader and transponder takes place asynchronously through the RS422 interface. Depending on the communication module (ASM) used, transfer rates of 19200 baud, 57600 baud or 115200 baud can be selected.

Calculation of the communication time for interference-free transfer

The communication time for fault-free data transfer is calculated as follows:

$$t_K = K + t_{Byte} \cdot n \qquad (n \geq 1)$$

If the transmission is interrupted briefly due to external interference, the communication module automatically continues the command.

Calculation of the maximum amount of user data

The maximum amount of user data is calculated as follows:

$$n_{\max} = \frac{t_V - K}{t_{Byte}}$$

t_k: Communication time between communication module, reader and transponder

t_v: Dwell time

n: Amount of user data in bytes

n_{max}: Max. amount of user data in bytes in dynamic mode

t_{byte}: Transmission time for 1 byte

K: Constant; the constant is an internal system time. This contains the time for power buildup on the transponder and for command transfer

Time constants K and t_{byte} for medium and high-performance applications

Table 4- 5 Static mode

Transfer rate [baud]	RF300 mode FRAM				ISO mode					
	Read/write				Read				Write	
	Data volume ≤ 233 bytes		Data volume >233 bytes		Data volume ≤ 233 bytes		Data volume >233 bytes		Independent of data volume	
	K [ms]	t_{byte} [ms]	K [ms]	t_{byte} [ms]	K [ms]	t_{byte} [ms]	K [ms]	t_{byte} [ms]	K [ms]	t_{byte} [ms]
19200	28	0.67	28	0.67	35	1.08	64	0.75	41	2.66
57600	15	0.30	25	0.22	34	0.59	34	0.59	28	2.28
115200	11	0.21	30	0.12	26	0.56	26	0.56	26	2.17

The values for K and t_{byte} include the overall time that is required for communication in static mode. It is built up from several different times:

- Serial communication between communication module, reader and
- Processing time between reader and transponder and their internal processing time.

The values shown in the table must be used when calculating the maximum quantity of user data in static mode. They are applicable for both reading and writing in the FRAM area.

For writing in the EEPROM area (max. 20 bytes), the byte time t_{Byte} is approx. 11 ms.

Table 4- 6 Dynamic mode

Transfer rate [baud]	Memory area	RF300 tags		ISO tags	
		K [ms]	t_{byte} [ms]	K [ms]	t_{byte} [ms]
Independent	FRAM	8	0.13	-	-
Independent	EEPROM				
Write		8	12.20	15	1.99
Read		8	0.13	12	0.56

In dynamic mode, the values for K and t_{byte} are independent of the transmission speed. The communication time only includes the processing time between the reader and the transponder and the internal system processing time of these components. The communication times between the communication module and the reader do not have to be taken into account because the command for reading or writing is already active when the transponder enters the transmission field of the reader.

The values shown above must be used when calculating the maximum quantity of user data in dynamic mode. They are applicable for both writing and reading.

Time constants K and t_{byte} for low-performance applications (IQ-Sense)

Table 4- 7 Static mode

K (ms)	t_{byte} (ms)	Command
15	15	Read (FRAM/EEPROM area)
15	15	Write (FRAM area)
30	30	Write (EEPROM area)

The table of time constants applies to every command. If a user command consists of several subcommands, the above t_K formula must be applied to each subcommand.

4.1.9 Calculation example (RS422)

A transport system moves pallets with transponders at a maximum velocity of V_{Tag} = 1.0 m/s (dynamic mode). The following RFID components were selected:

- ASM 475 communication module
- RF310R reader with RS422 interface
- Transponder RF340T

Task

a) The designer of the plant is to be given mechanical specifications.

b) The programmer should be given the maximum number of bytes in dynamic mode.

Refer to the tables in the "Field data of transponders and readers" section for the technical data.

Determine tolerance of pallet transport height

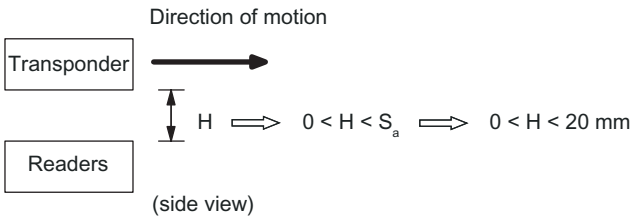

Figure 4-6 Tolerance of pallet transport height

Determine tolerance of pallet side transport

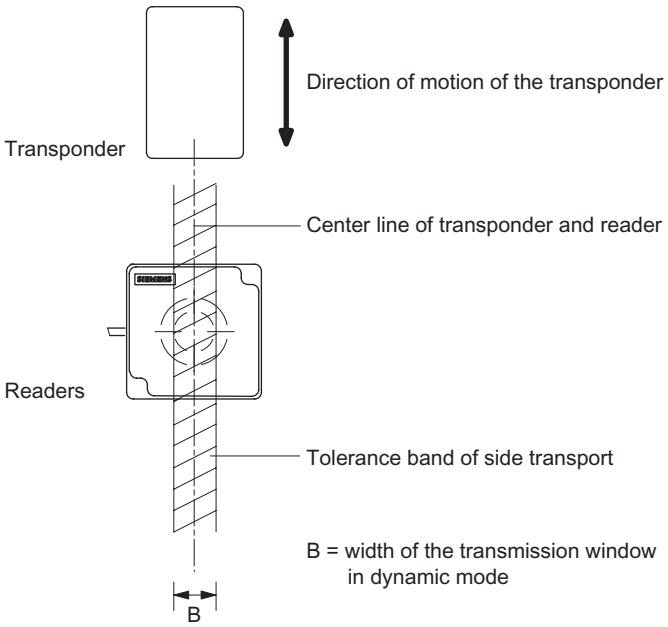

Figure 4-7 Tolerance of pallet side transport

Minimum distance from reader to reader

Refer to the field data of the reader for this value.

Minimum distance from transponder to transponder

Refer to the field data of the transponder for this value.

Calculation of the maximum amount of user data in dynamic mode

Step		Formula/calculation
1.	Calculate dwell time of the transponder	Refer to the "Field data of all transponders and readers" table for value L. Value v_{Tag} = 1.00 m/s $t_v = \frac{L \cdot 0{,}8}{v_{Tag}} = \frac{0{,}038\ m \cdot 0{,}8}{1{,}0\ m/s} = 0{,}0304\ s = 30{,}4\ ms$
2.	Calculate maximum user data (n_{max}) for reading or writing (FRAM area)	Take value t_v from Step 1. Take values K and t_{Byte} from Table "Time constants K and t_{Byte}". Read / write: $\frac{t_v - K}{t_{bytes}} = \frac{30.4\ ms - 8\ ms}{0.13\ ms} = 172.3\ bytes \Rightarrow n_{max} \approx 172\ bytes$

Result

A maximum of 172 bytes can be read or written when the transponder passes by.

4.2 Field data for transponders, readers and antennas

The following table shows the field data for all SIMATIC RF300 components of transponders and readers. It facilitates the correct selection of a transponder and reader.

All the technical specifications listed are typical data and are applicable for an ambient temperature of between 0 C and +50 °C, a supply voltage of between 22 V and 27 V DC and a metal-free environment. **Tolerances of ±20 % are admissible due to production or temperature conditions.**

If the entire voltage range at the reader of 20 V DC to 30 V DC and/or the entire temperature range of transponders and readers is used, the field data are subject to further tolerances.

Note

Transmission gaps

If the minimum operating distance (S_a) is not observed, a transmission gap can occur in the center of the field. Communication with the transponder is not possible in the transmission gap.

4.2.1 Field data of RF300 transponders

Observe the following information for field data of RF300 transponders:

- A maximum median deviation of ±2 mm is possible in static mode (without affecting the field data)
- The field data are reduced by approx. 15% if the transponder enters the transmission window laterally (see also "Transmission window" figure)

RF310R reader

Table 4- 8 RF310R reader

	RF320T	RF340T	RF350T	RF360T	RF370T	RF380T
Length of the transmission window (L)	30	38	45	45	Combination with the RF310R is basically possible, but is not recommended because the antenna geometries for the reader and transponder are not ideally matched.	
Operating distance (S_a)	2...10	2...20	5...22 [26]	5...26		
Limit distance (S_g)	16	26	30 [35]	35		

All values are in mm

Values in brackets [ ] refer to RF310R with the MLFB 6GT2801-1AB10

RF340R reader

Table 4- 9 RF340R reader

	RF320T	RF340T	RF350T	RF360T	RF370T	RF380T
Length of the transmission window (L_x)	45	60	60	70	75	85
Width of the transmission window (L_y)	40	45	50	60	65	75
Operating distance (S_a)	2...20	5...25	5...35	8...40	15...36	15...47
Limit distance (S_g)	25	35	50	60	52	55

All values are in mm

RF350R reader / ANT 1

Table 4- 10 RF350R reader / ANT 1

	RF320T	RF340T	RF350T	RF360T	RF370T	RF380T
Length of the transmission window (L)	45	60	60	70	70	88
Operating distance (S_a)	2...20	5...25	5...35	8...40	15...45	15...53
Limit distance (S_g)	25	35	50	60	65	65

All values are in mm

RF350R reader / ANT 18

Table 4- 11 RF350R reader / ANT 18

	RF320T	RF340T	RF350T	RF360T	RF370T	RF380T
Diameter of the transmission window (L_d)	10	20	Not yet released			
Operating distance (S_a)	2...8	2...10				
Limit distance (S_g)	10	13				

All values are in mm

RF350R reader / ANT 30

Table 4- 12 RF350R reader / ANT 30

	RF320T	RF340T	RF350T	RF360T	RF370T	RF380T
Diameter of the transmission window (L_d)	15	25	25	Not yet released		
Operating distance (S_a)	2...11	5...15	5...16			
Limit distance (S_g)	15	20	22			

All values are in mm

RF380R reader

Table 4- 13 RF380R reader

	RF320T	RF340T	RF350T	RF360T	RF370T	RF380T
Length of the transmission window (L_x)	100	115	120	120	135	155
Width of the transmission window (L_y)	40	50	60	70	65	75
Operating distance (S_a)	2...30 [40]	20...70 [80]	35...70 [100]	40...120	35...85 [100]	25...85 [110]
Limit distance (S_g)	47 [55]	90 [100]	105 [130]	140 [150]	125 [135]	125 [140]

All values are in mm

Values in brackets [ ] refer to RF380R with the MLFB 6GT2801-3AB10

The RF380R with MLFB 6GT2801-3AB10 gives the user the capability of setting the transmission output power with the aid of the "dili" (distance limiting) input parameter. For this, values from approx. 0.5 W to approx. 2.0 W can be set in 0.25 W increments. Depending on the setting, the change to the transmission output power increases the performance in the lower operating distance (low performance) or in the upper limit distance (high performance).

The "dili" value range goes from

02 (= 0.5 W) and

05 (default value: 1.25 W) to

08 (= 2 W).

Note

A dili value setting outside of the value range of 02 to 08 leads to the default setting (05) and does not generate an error message.

Also see Chapter Minimum clearances (Page 48) Section "Minimum distance from reader to reader".

You can find exact information regarding the parameters in the Product Information "FB 45 and FC 45 input parameters for RF300 and ISO transponders" (http://support.automation.siemens.com/WW/view/en/33315697).

4.2.2 Field data of ISO transponders

Observe the following information for field data of ISO transponders:

- A maximum median deviation of ±2 mm is possible in static mode (without affecting the field data)
- The field data are reduced by approx. 15% if the transponder enters the transmission window laterally (see also "Transmission window" figure)

RF310R reader

Table 4- 14 RF310R reader

	MDS D100	MDS D124	MDS D139	MDS D160	MDS D324
Length of the transmission window (L)	50	30	1)	36	40
Operating distance (S_a)	2...78	2...22		2...25	2...30
Limit distance (S_g)	90	30		37	38

All values are in mm

1) Combination with the RF310R is basically possible, but is not recommended because the antenna geometries for the reader and transponder are not ideally matched.

RF380R reader

Table 4- 15 RF380R reader

	MDS D100	MDS D124	MDS D139	MDS D160	MDS D324
Length of the transmission window (L_x)	160	100	155	120	130
Width of the transmission window (L_y)	100	80	90	40	60
Operating distance (S_a)	15…170	0…72	15...160	0…64	0…96
Limit distance (S_g)	210	90	200	80	120

All values are in mm

Only the MDS D139 with MLFB 6GT2600-0AA10 is compatible with SIMATIC RF300.

4.2.3 Minimum clearances

Minimum distance from transponder to transponder

The specified distances refer to a metal-free environment. For a metallic environment, the specified minimum distances must be multiplied by a factor of 1.5.

Table 4- 16 RF300 tags

Readers	RF320T	RF340T	RF350T	RF360T	RF370T	RF380T
RF310R	≥ 50	≥ 60	≥ 60	≥ 60	n.a.	n.a.
RF340R	≥ 70	≥ 80	≥ 80	≥ 80	≥ 80	≥ 80
RF350R, ANT1	≥ 70	≥ 80	≥ 80	≥ 80	≥ 80	≥ 80
RF350R, ANT18	≥ 20	≥ 40	n.a.	n.a.	n.a.	n.a.
RF350R, ANT30	≥ 40	≥ 40	≥ 50	n.a.	n.a.	n.a.
RF380R	≥ 120	≥ 140	≥ 150	≥ 120	≥ 130	≥ 150

The values are all in mm, relative to the operating distance (S_a) between reader and tag

Table 4- 17 ISO tags

Readers	MDS D100	MDS D124	MDS D139	MDS D160	MDS D234
RF310R	≥ 120	≥ 100	≥ 120	≥ 120	≥ 120
RF380R	≥ 300	≥ 170	≥ 230	≥ 150	≥ 250

The values are all in mm, relative to the operating distance (S_a) between reader and tag

Minimum distance from reader to reader

RF310R to RF310R	RF340R to RF340R	RF380R to RF380R[1)]
≥ 100	≥ 200	≥ 400

All values are in mm

1) The permissible minimum distance between two RF380Rs depends on the transmission output power that is set. The specified minimum distance must be multiplied by the following factor, depending on the output:

DILI byte	Factor
02; 03	0.8
04; 05; 06	1.0
07; 08	1.2

Minimum distance from antenna to antenna

ANT1	ANT18	ANT30
≥ 100	≥ 100	≥ 100

All values are in mm

See also Minimum distance between antennas (Page 117)

NOTICE
Effect on inductive fields by not maintaining the minimum distances of the readers When the values specified in the "minimum distance from reader to reader" table are not met, there is a risk of affecting inductive fields. In this case, the data transfer time would increase unpredictably or a command would be aborted with an error. Adherence to the values specified in the "Minimum distance from reader to reader" table is therefore essential.

If the specified minimum distance cannot be complied with due to the physical configuration, the SET-ANT command can be used to activate and deactivate the HF field of the reader. The application software must be used to ensure that only one reader is active (antenna is switched on) at a time.

4.3 Dependence of the volume of data on the transponder speed with RF300 tags

The curves seen here show the relation between speed and data transfer volume for each transponder. They should make it easier to preselect the transponders for dynamic use.

4.3.1 RF320T with RF310R, RF340R, RF350R, RF380R

The following table is used to calculate the curves.

The indicated speeds are applicable for operation without presence check.

	RF310R	RF340R/ RF350R	RF380R
Operating distance (S_a)	10 mm	10 mm	40 mm

RF320T: Display of speed relative to data volume (write)

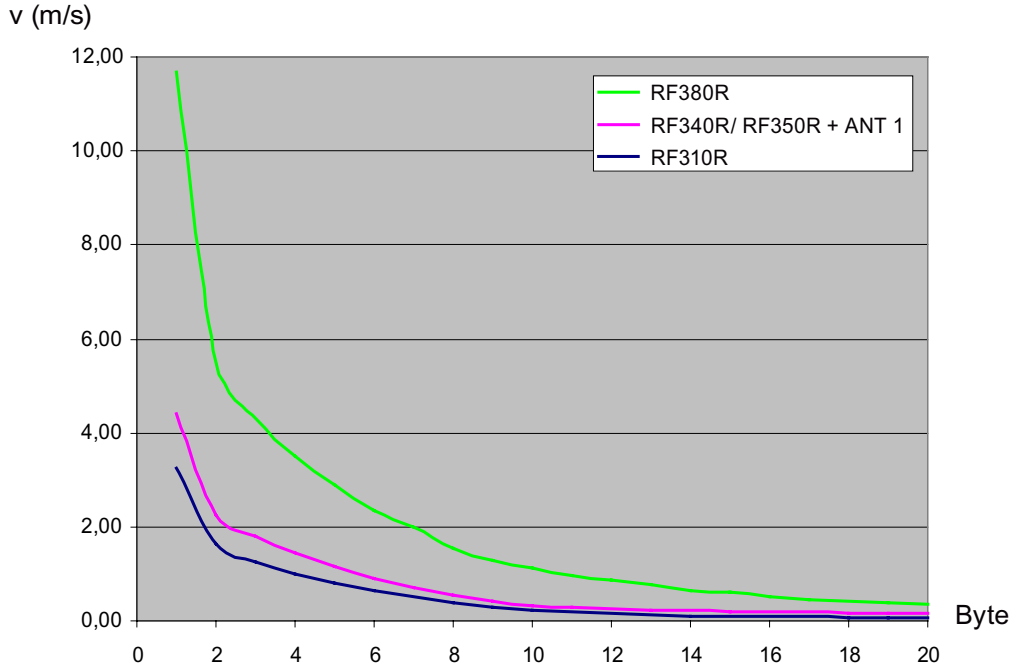

Figure 4-8 RF320T with RF310R, RF340R/RF350R, RF380R

4.3.2 RF340T with RF310R, RF340R, RF350R, RF380R

The following table is used to calculate the curves.

The indicated speeds are applicable for operation without presence check.

	RF310R	RF340R/ RF350R	RF380R
Operating distance (S_a)	20 mm	20 mm	40 mm

RF340T: Display of speed relative to data volume (read/write)

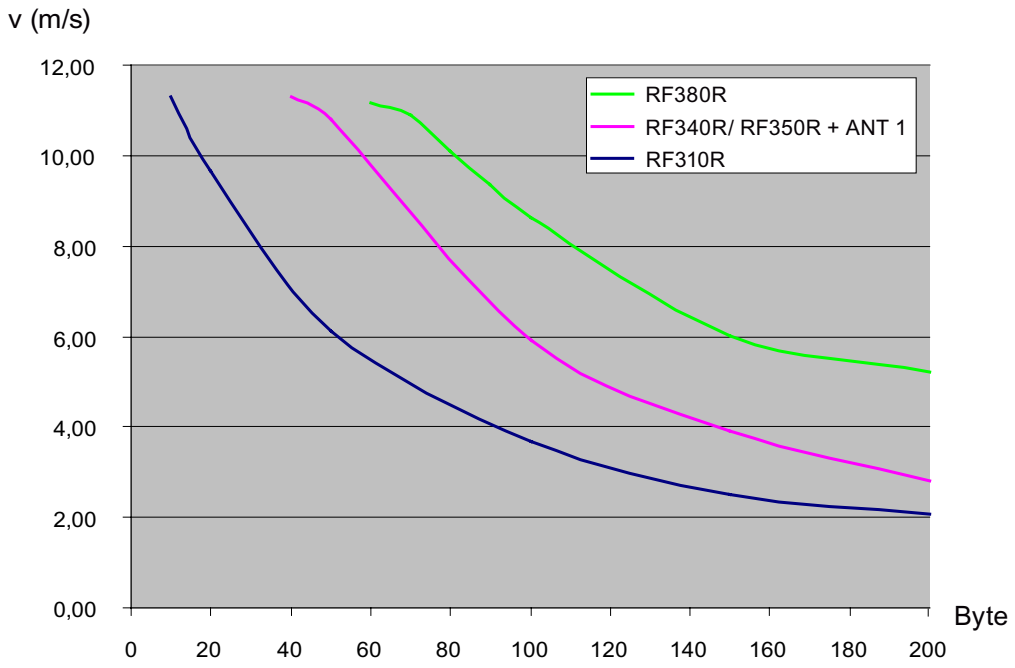

Figure 4-9 RF340T with RF310R, RF340R/RF350R and RF380R

4.3.3 RF350T with RF310R, RF340R, RF350R, RF380R

The following table is used to calculate the curves.

The indicated speeds are applicable for operation without presence check.

	RF310R	RF340R/ RF350R	RF380R
Operating distance (S_a)	22 mm	22 mm	40 mm

RF350T: Display of speed relative to data volume (read/write)

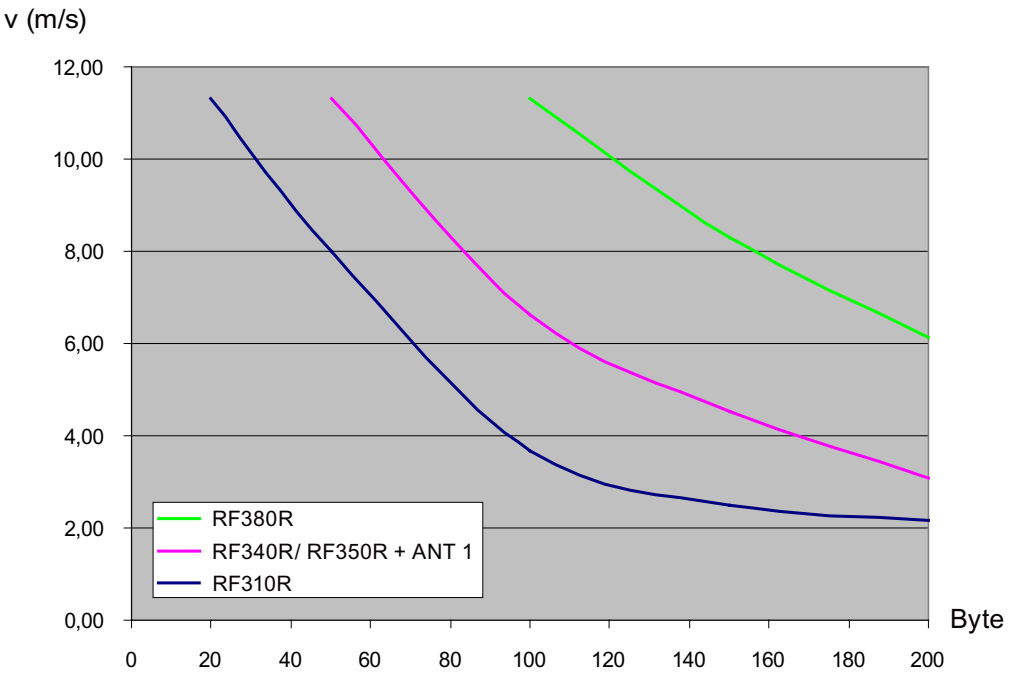

Figure 4-10 RF350T with RF310R, RF340R/RF350R and RF380R

4.3.4 RF360T with RF310R, RF340R, RF350R, RF380R

The following table is used to calculate the curves.

The indicated speeds are applicable for operation without presence check.

	RF310R	RF340R/ RF350R	RF380R
Operating distance (S_a)	26 mm	26 mm	60 mm

RF360T: Display of speed relative to data volume (read/write)

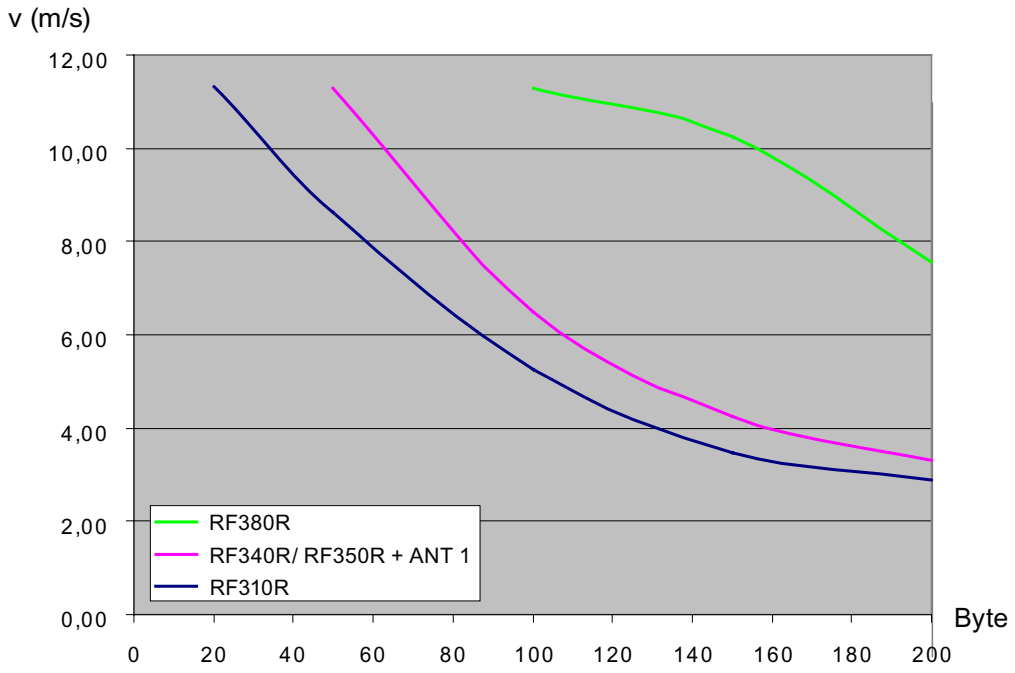

Figure 4-11 RF360T with RF310R, RF340R/RF350R and RF380R

4.3.5 RF370T with RF340R, RF350R, RF380R

The following table is used to calculate the curves.

The indicated speeds are applicable for operation without presence check.

	RF340R/ RF350R	RF380R
Operating distance (S_a)	22 mm	60 mm

RF370T: Display of speed relative to data volume (read/write)

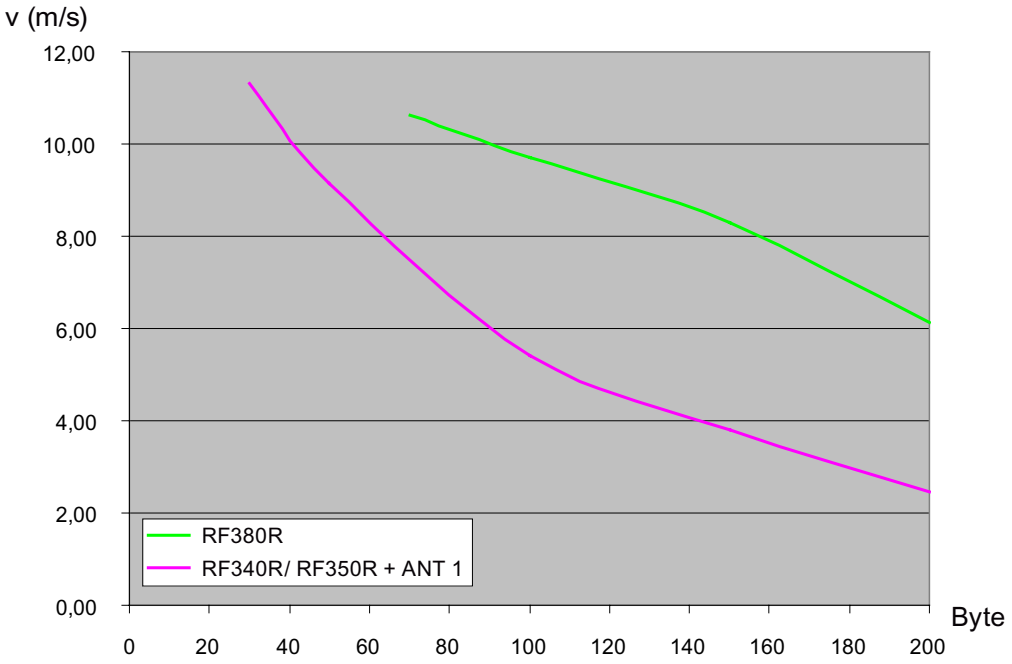

Figure 4-12 RF370T with RF340R/RF350R and RF380R

4.3.6 RF380T with RF340R, RF350R, RF380R

The following table is used to calculate the curves.

The indicated speeds are applicable for operation without presence check.

	RF340R/ RF350R	RF380R
Operating distance (S_a)	22 mm	60 mm

RF380T: Display of speed relative to data volume (read/write)

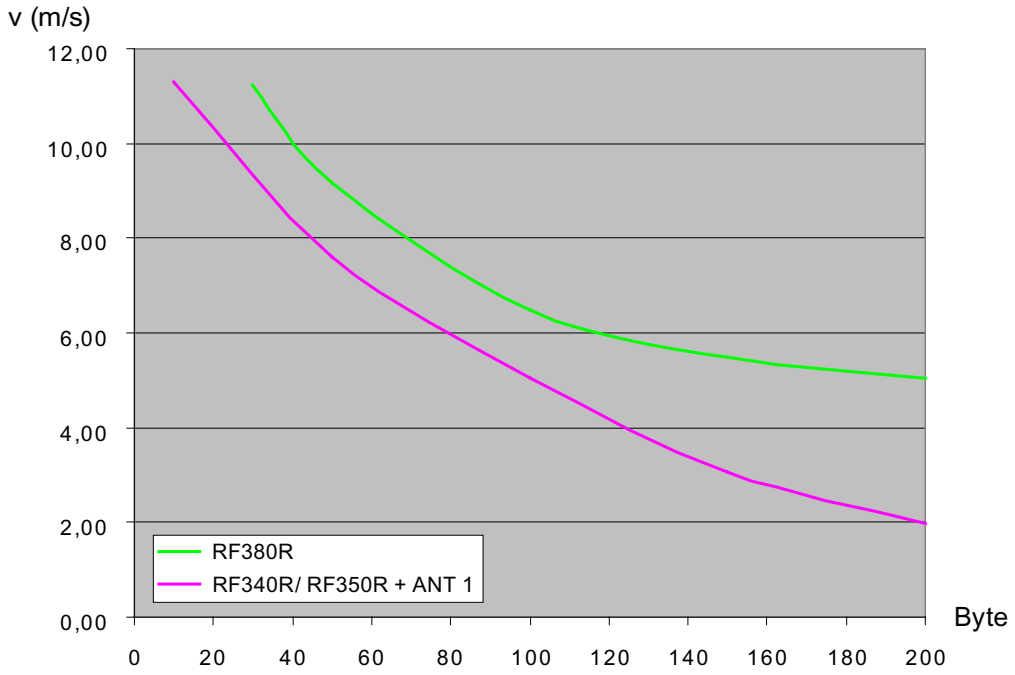

Figure 4-13 RF380T with RF340R/RF350R and RF380R

4.4 Dependence of the volume of data on the transponder speed with ISO tags

The curves seen here show the relation between speed and data transfer volume for each transponder. They should make it easier to preselect the transponders for dynamic use.

4.4.1 MDS D100 with RF310R and RF380R

The following table is used to calculate the curves.

The indicated speeds are applicable for operation without presence check.

	RF310R	RF380R
Operating distance (S_a)	30 mm	30 mm

MDS D100: Display of speed relative to data volume (read/write)

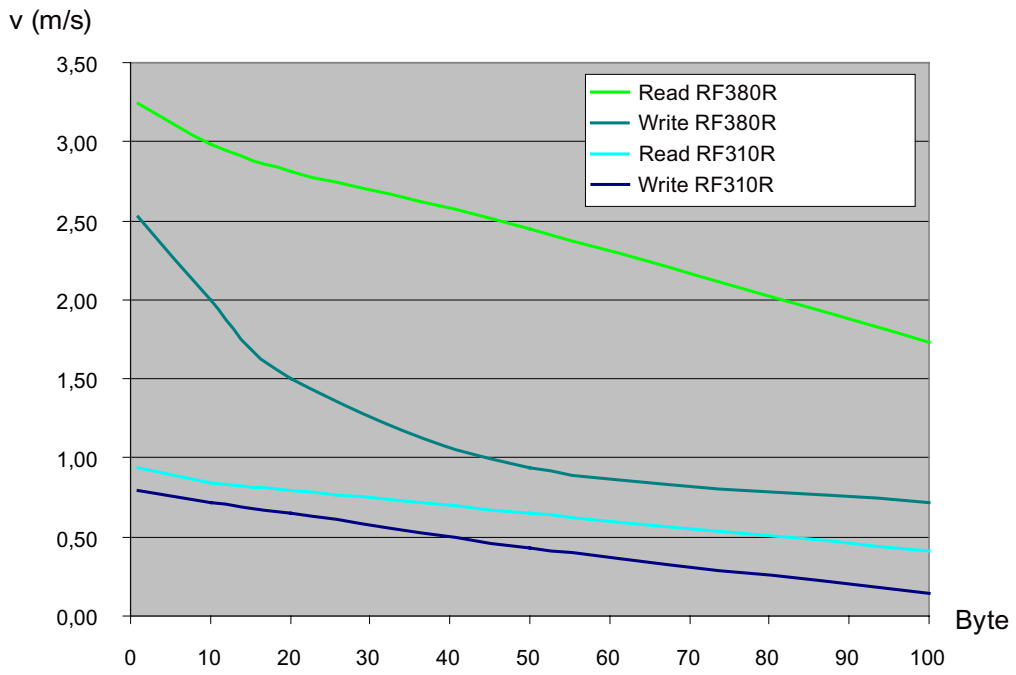

Figure 4-14 MDS D100 with RF310R and RF380R

4.4.2 MDS D124 with RF310R and RF380R

The following table is used to calculate the curves.

The indicated speeds are applicable for operation without presence check.

	RF310R	RF380R
Operating distance (S_a)	25 mm	40 mm

MDS D124: Display of speed relative to data volume (read/write)

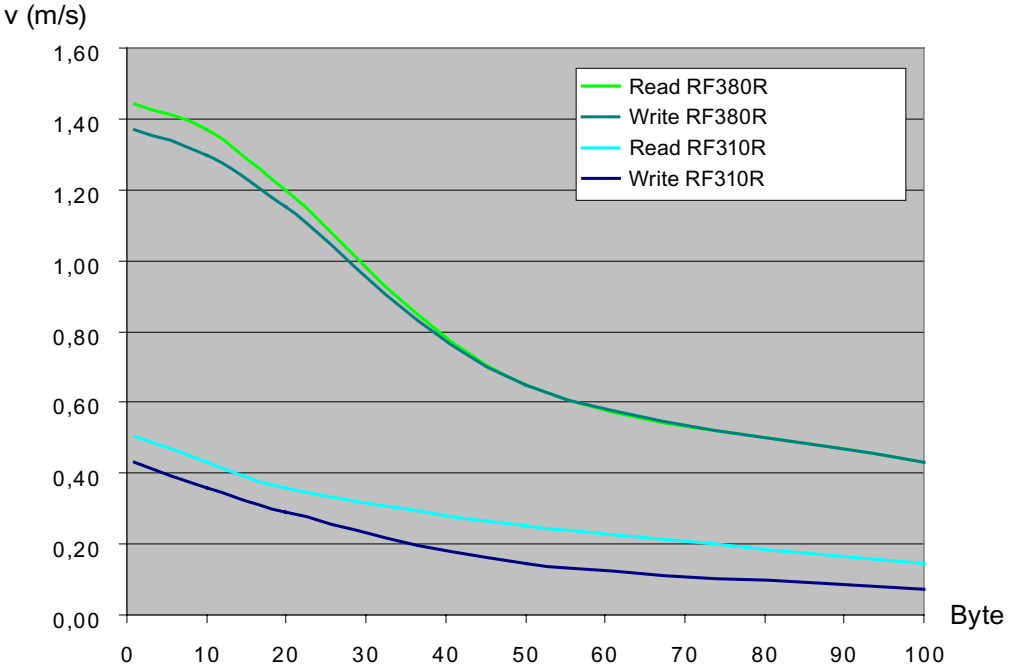

Figure 4-15 MDS D124 with RF310R and RF380R

4.4.3 MDS D139 with RF310R and RF380R

The following table is used to calculate the curves.

The indicated speeds are applicable for operation without presence check.

	RF380R
Operating distance (S_a)	60 mm

MDS D139: Display of speed relative to data volume (read/write)

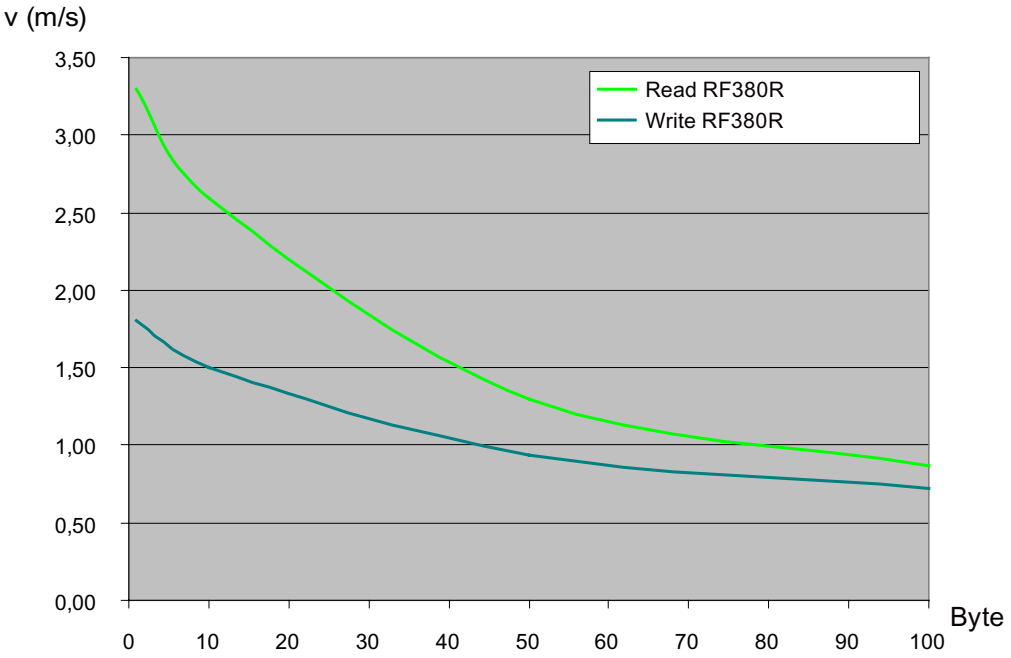

Figure 4-16 MDS D139 with RF310R and RF380R

4.4.4 MDS D160 with RF310R and RF380R

The following table is used to calculate the curves.

The indicated speeds are applicable for operation without presence check.

	RF310R	RF380R
Operating distance (S_a)	20 mm	40 mm

MDS D160: Display of speed relative to data volume (read/write)

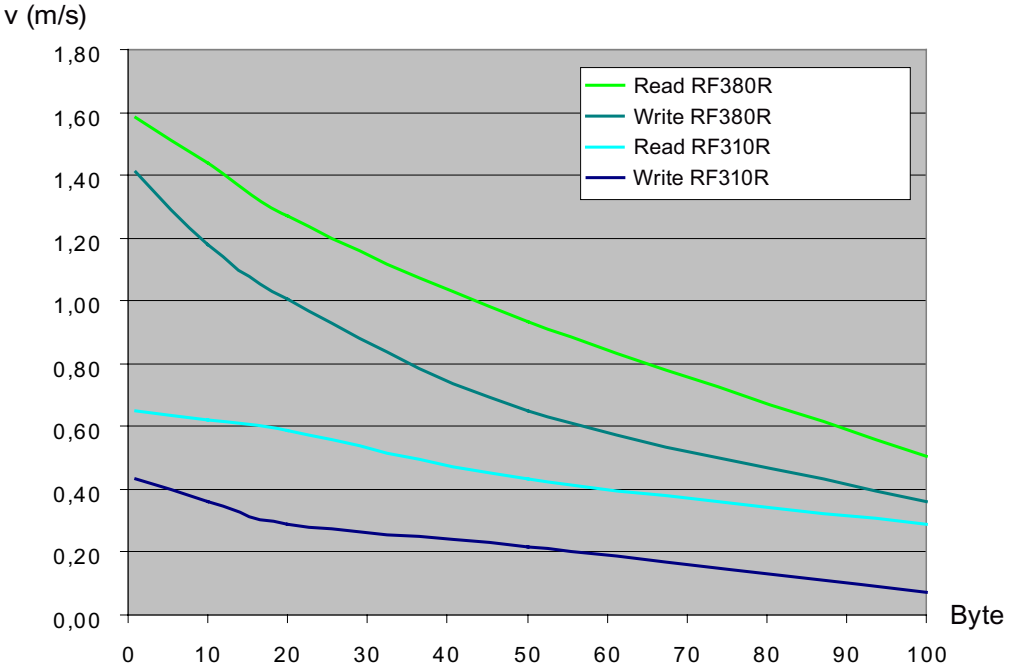

Figure 4-17 MDS D160 with RF310R and RF380R

4.4.5 MDS D324 with RF310R and RF380R

The following table is used to calculate the curves.

The indicated speeds are applicable for operation without presence check.

	RF310R	RF380R
Operating distance (S_a)	20 mm	40 mm

MDS D324: Display of speed relative to data volume (read/write)

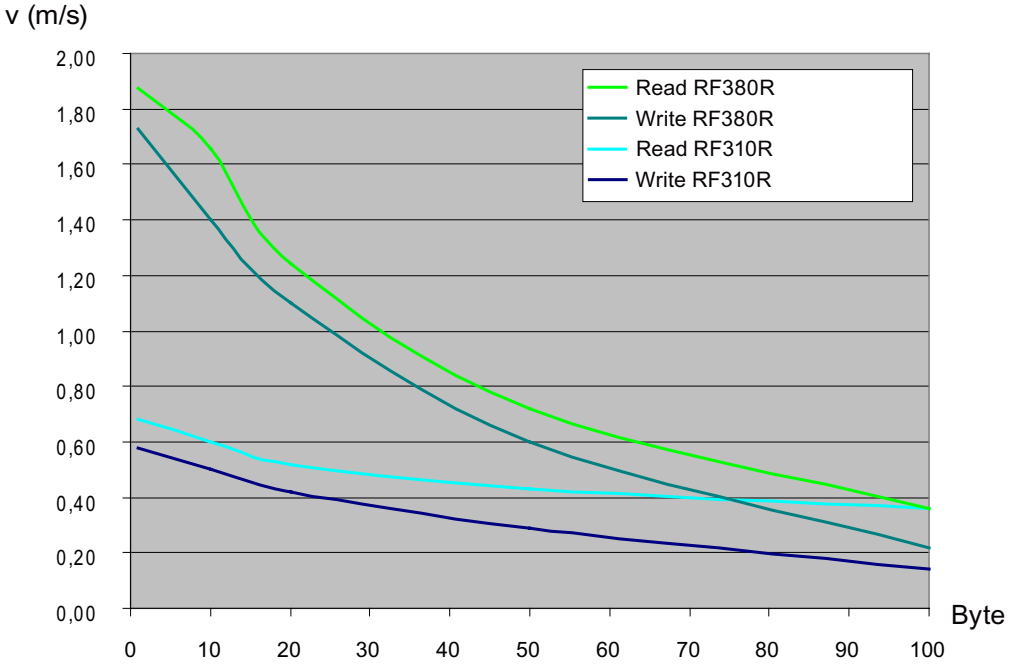

Figure 4-18 MDS D324 with RF310R and RF380R

4.5 Installation guidelines

4.5.1 Overview

The transponder and reader complete with their antennas are inductive devices. Any type of metal, in particular iron and ferromagnetic materials, in the vicinity of these devices will affect their operation. Some points need to be considered during planning and installation if the values described in the "Field data" section are to retain their validity:

- Minimum spacing between two readers or their antennas
- Minimum distance between two adjacent data memories
- Metal-free area for flush-mounting of readers or their antennas and transponders in metal
- Mounting of multiple readers or their antennas on metal frames or racks

The following sections describe the impact on the operation of the identification system when mounted in the vicinity of metal.

4.5.2 Reduction of interference due to metal

Interference due to metal rack	Problem
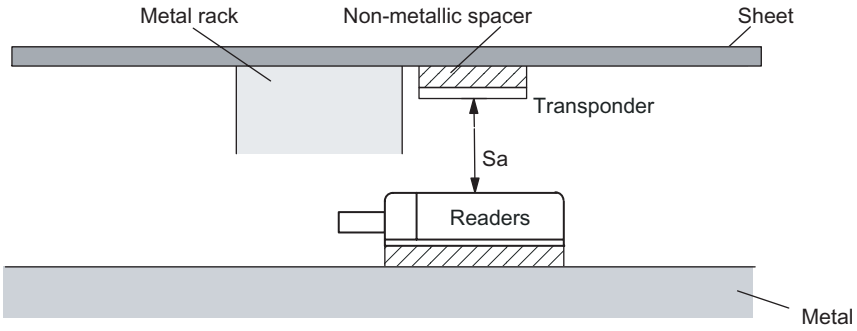	A metal rack is located above the transmission window of the reader. This affects the entire field. In particular, the transmission window between reader and transponder is reduced.
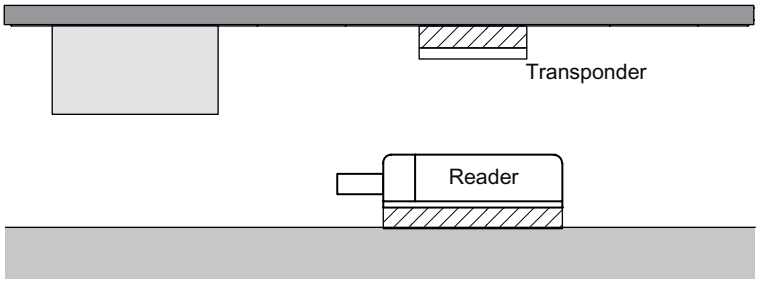	**Remedy:** The transmission window is no longer affected if the transponder is mounted differently.

Flush-mounting

Flush-mounting of transponders and readers	Problem
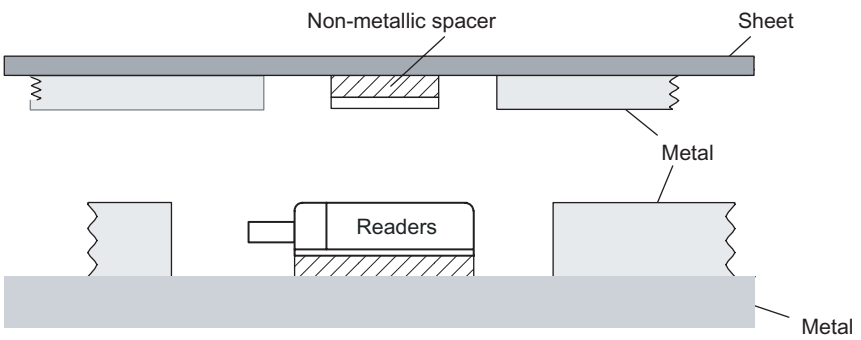	Flush-mounting of transponders and readers is possible in principle. However, the size of the transmission window is significantly reduced. The following measures can be used to counteract the reduction of the window:
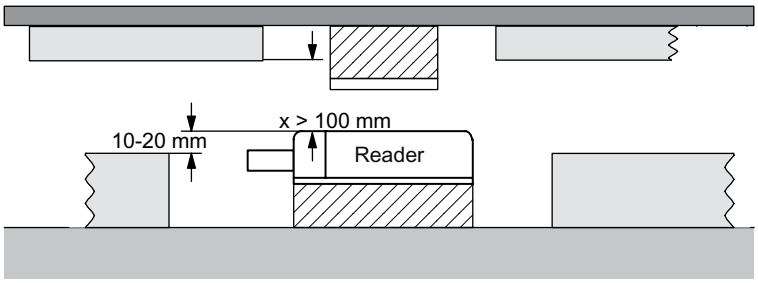	**Remedy:** Enlargement of the non-metallic spacer below the transponder and/or reader. The transponder and/or reader are 10 to 20 mm higher than the metal surround. (The value x ≥ 100 mm is valid, e.g. for RF310R. It indicates that, for a distance x ≥ 100 mm, the reader can no longer be significantly affected by metal.)
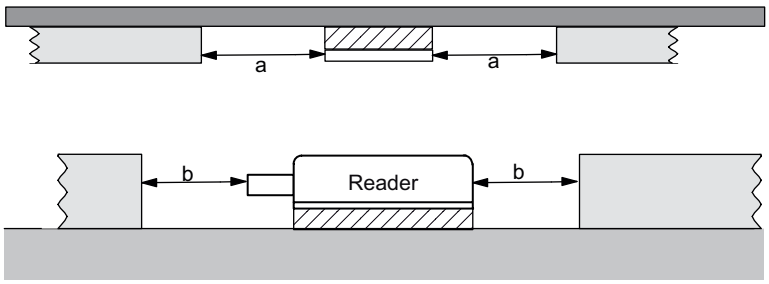	**Remedy:** Increase the non-metallic distance a, b. The following rule of thumb can be used: • Increase a, b by a factor of 2 to 3 over the values specified for metal-free areas • Increasing a, b has a greater effect for readers or transponders with a large limit distance than for readers or transponders with a small limit distance.

Mounting of several readers on metal frames or racks

Any reader mounted on metal couples part of the field to the metal frame. There is normally no interaction as long as the minimum distance D and metal-free areas a, b are maintained. However, interaction may take place if an iron frame is positioned unfavorably. Longer data transfer times or sporadic error messages at the communication module are the result.

Mounting of several readers on metal racks	Problem: Interaction between readers
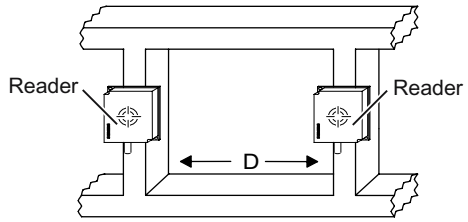	**Remedy** Increase the distance D between the two readers.
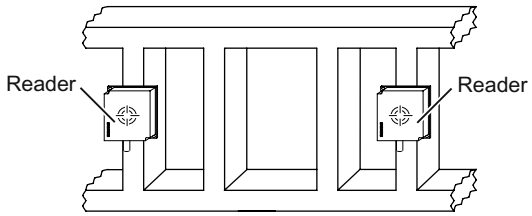	**Remedy** Introduce one or more iron struts in order to short-circuit the stray fields.
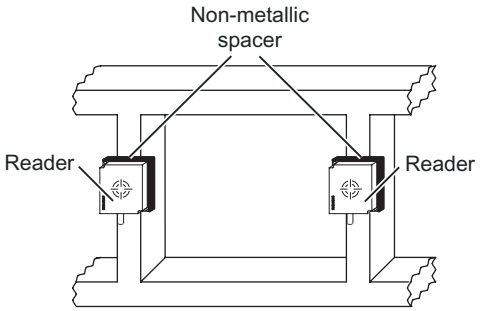	**Remedy** Insert a non-metallic spacer of 20 to 40 millimeter thickness between the reader and the iron frame. This will significantly reduce the induction of stray fields on the rack:

4.5.3 Effects of metal on different transponders and readers

Mounting different transponders and readers on metal or flush-mounting

Certain conditions have to be observed when mounting the transponders and readers on metal or flush-mounting. For more information, please refer to the descriptions of the individual transponders and readers in the relevant section.

4.5.4 Impact on the transmission window by metal

In general, the following points should be considered when mounting RFID components:

- Direct mounting on metal is allowed only in the case of specially approved transponders.
- Flush-mounting of the components in metal reduces the field data; a test is recommended in critical applications.
- When working inside the transmission window, it should be ensured that no metal rail (or similar part) intersects the transmission field.
  The metal rail would affect the field data.

The impact of metal on the field data (S_g, S_a, L, B) is shown in tabular format in this section. The values in the table describe the reduction of the field data in % with reference to non-metal (100% means no impact).

Reader RF310R:RF300 mode

Table 4- 18 Reduction of field data by metal (in %): Transponder and RF310R

Transponder		RF310R reader		
		Without metal	On metal	Flush-mounted In metal (20 mm all around)
RF320T	Without metal	100	95	80
	On metal; distance 20 mm	100	80	70
	Flush-mounted in metal; distance all-round 20 mm	80	70	60
RF340T	Without metal	100	95	80
	On metal	80	80	80
	Flush-mounted in metal; distance all-round 20 mm	70	70	70
RF350T	Without metal	100	95	85
	On metal	70	65	65
	Flush-mounted in metal; distance all-round 20 mm	60	60	60
RF360T	Without metal	100	95	85
	On metal; distance 20 mm	100	95	75
	Flush-mounted in metal; distance all-round 20 mm	60	60	60

RF310R reader: ISO mode

Table 4- 19 Reduction of field data by metal (in %): Transponder and RF380R (ISO mode)

Transponder		RF310R reader (ISO mode)		
		Without metal	On metal	Flush-mounted In metal (20 mm all around)
MDS D100	Without metal	100	95	80
	On metal; distance 20 mm	77	70	67
	Flush-mounted in metal; distance all-round 20 mm	58	55	52
MDS D124	Without metal	100	98	82
	On metal	93	94	87
	Flush-mounted in metal; distance all-round 20 mm	82	76	60
MDS D160	Without metal	100	92	83
	On metal; distance 20 mm	78	77	74
	Flush-mounted in metal; distance all-round 20 mm	70	63	60
MDS D324	Without metal	100	95	76
	On metal	83	81	78
	Flush-mounted in metal; distance all-round 20 mm	79	76	72

RF340R reader

Table 4- 20 Reduction of field data by metal (in %): Transponder and RF340R

Transponder		RF340R reader		
		Without metal	On metal	Flush-mounted In metal (20 mm all around)
RF320T	Without metal	100	95	80
	On metal; distance 20 mm	100	90	75
	Flush-mounted in metal; distance all-round 20 mm	80	70	60
RF340T	Without metal	100	95	85
	On metal	80	80	70
	Flush-mounted in metal; distance all-round 20 mm	70	70	70
RF350T	Without metal	100	95	80
	On metal	70	65	65
	Flush-mounted in metal; distance all-round 20 mm	60	60	60
RF360T	Without metal	100	95	85
	On metal; distance 20 mm	90	90	75
	Flush-mounted in metal; distance all-round 20 mm	70	60	60
RF370T	Without metal	100	98	96
	On metal	100	97	94
	Flush-mounted in metal; distance all-round 20 mm	90	88	86
RF380T	Without metal	100	86	76 (all-round 40 mm)
	On metal	100	86	76 (all-round 40 mm)
	Flush-mounted in metal; distance all-round 40 mm	83	71	55 (all-round 40 mm)

RF350R reader with ANT 1

Table 4- 21 Reduction of field data by metal (in %): Transponder and RF350R with ANT 1

Transponder		RF350R reader		
		Without metal	On metal	Flush-mounted In metal (20 mm all around)
RF320T	Without metal	100	95	80
	On metal; distance 20 mm	100	90	75
	Flush-mounted in metal; distance all-round 20 mm	80	70	60
RF340T	Without metal	100	95	85
	On metal	80	80	70
	Flush-mounted in metal; distance all-round 20 mm	70	70	70
RF350T	Without metal	100	95	80
	On metal	70	65	65
	Flush-mounted in metal; distance all-round 20 mm	60	60	60
RF360T	Without metal	100	95	85
	On metal; distance 20 mm	90	90	75
	Flush-mounted in metal; distance all-round 20 mm	70	60	60
RF370T	Without metal	100	86	73
	On metal	100	83	69
	Flush-mounted in metal; distance all-round 20 mm	90	74	61
RF380T	Without metal	100	83	73 (all-round 40 mm)
	On metal	100	83	73 (all-round 40 mm)
	Flush-mounted in metal; distance all-round 40 mm	80	68	53 (all-round 40 mm)

RF350R reader with ANT 18

Table 4- 22 Reduction of field data by metal (in %): Transponder and RF350R with ANT 18

Transponder		Mounting the antenna	
		Without metal	Flush-mounted In metal (10 mm all-round; 10 mm deep)
RF320T	Without metal	100	100
	On metal; distance 20 mm	100	100
	Flush-mounted in metal; distance all-round 20 mm	80	80
RF340T	Without metal	100	100
	On metal	80	80
	Flush-mounted in metal; distance all-round 20 mm	70	70
RF350T	Without metal	combination not permitted	
	On metal		
	Flush-mounted in metal; distance all-round 20 mm		
RF360T	Without metal	combination not permitted	
	On metal; distance 20 mm		
	Flush-mounted in metal; distance all-round 20 mm		

RF350R reader with ANT 30

Table 4- 23 Reduction of field data by metal (in %): Transponder and RF350R with ANT 30

Transponder		Mounting the antenna	
		Without metal	Flush-mounted In metal (20 mm all-round; 20 mm deep)
RF320T	Without metal	100	80
	On metal; distance 20 mm	100	80
	Flush-mounted in metal; distance all-round 20 mm	100	80
RF340T	Without metal	100	80
	On metal	80	65
	Flush-mounted in metal; distance all-round 20 mm	70	60
RF350T	Without metal	100	80
	On metal	70	60
	Flush-mounted in metal; distance all-round 20 mm	65	55
RF360T	Without metal	combination not permitted	
	On metal; distance 20 mm		
	Flush-mounted in metal; distance all-round 20 mm		

Reader RF380R-RF300 mode

Table 4- 24 Reduction of field data by metal (in %): Transponder and RF380R (RF300 mode)

Transponder		Reader RF380R (RF300 mode)		
		Without metal	On metal	Flush-mounted In metal (20 mm all around)
RF320T	Without metal	100	95	90
	On metal; distance 20 mm	85	75	70
	Flush-mounted in metal; distance all-round 20 mm	60	55	50
RF340T	Without metal	100	90	80
	On metal	70	65	60
	Flush-mounted in metal; distance all-round 20 mm	63	60	55
RF350T	Without metal	100	85	80
	On metal	70	65	60
	Flush-mounted in metal; distance all-round 20 mm	55	50	45
RF360T	Without metal	100	95	85
	On metal; distance 20 mm	75	70	65
	Flush-mounted in metal; distance all-round 20 mm	60	55	50
RF370T	Without metal	100	95	85
	On metal	90	85	80
	Flush-mounted in metal; distance all-round 20 mm	65	63	60
RF380T	Without metal	100	95	85
	On metal	95	90	80
	Flush-mounted in metal; distance all-round 40 mm	65	60	58

RF380R reader: ISO mode

Table 4- 25 Reduction of field data by metal (in %): Transponder and RF380R (ISO mode)

Transponder		Reader RF380R (ISO mode)		
		Without metal	On metal	Flush-mounted In metal (20 mm all around)
MDS D100	Without metal	100	95	80
	On metal; distance 20 mm	65	62	58
	Flush-mounted in metal; distance all-round 20 mm	58	53	48
MDS D124	Without metal	100	98	92
	On metal	95	92	87
	Flush-mounted in metal; distance all-round 20 mm	70	65	50
MDS D139	Without metal	100	92	75
	On metal, distance 30 mm	93	88	72
MDS D160	Without metal	100	95	90
	On metal; distance 20 mm	87	85	80
	Flush-mounted in metal; distance all-round 20 mm	73	65	60
MDS D324	Without metal	100	95	85
	On metal	85	83	80
	Flush-mounted in metal; distance all-round 20 mm	70	65	60

4.6 Chemical resistance of the transponders

The following table provides an overview of the chemical resistance of the data memories made of glass-fiber-reinforced epoxy resin. It must be emphasized that the plastic enclosure is extremely resistant to chemicals in automobiles (e.g.: oil, grease, diesel fuel, gasoline) which are not listed separately.

Transponders RF320T, RF360T

Transponder RF 320T is resistant to the substances specified in the following table.

	Concentration	20 °C	40 °C	60 °C
Acetic acid	100 %	○○		
Allylchloride		○○○○		
Ammonia gas		○○○○		
Ammonia liquid, water-free		–		
Ammonium hydroxide	10 %	○○○○		
Benzenesulphonic acid		○○○○		
Benzoate (Na–, Ca.a.)			○○○○	
Benzoic acid		○○○○		
Benzole		○○○○		
Benzyl chloride		–		
Borax				○○○○
Boric acid		○○○○		
Brine				–
Bromide (K–, Na.a.)				○○○○
Bromine water		–		
Bromine, gas, dry		–		
Bromine, liquid		–		
Bromoform	100 %	○○○○		
Butadiene (1,3–)		○○○○		
Butane gas		○○○○		
Butanol		–		
Butyric acid	100 %	○○		
Carbon disulfide 100 %		–		
Carbonate (ammonium, Na.a.)				○○○○
Chloride (ammonium, Na.a.)				○○○○
Chlorine water (saturated solution)		○○		
Chlorine, gas, dry	100 %	–		
Chlorine, liquid		–		
Chlorobenzene		○○○○		
Chloroform		–		
Chlorophyl		○○○○		
Chlorosulphonic acid	100 %	–		
Chromate (K–, Na.a.)	Up to 50 %		○○○○	

	Concentration	20 °C	40 °C	60 °C
Chromic acid	Up to 30 %	–		
Chromosulphuric acid		–		
Citric acid		○○○○		
Cresol	Up to 90 %	–		
Cyanamide		○○○○		
Cyanide (K–, Na.a.)				○○○○
Developer			○○○○	
Dextrin, w.				○○○○
Diethyl ether		○○○○		
Diethylene glycol				○○○○
Dimethyl ether		○○○○		
Dioxane		–		
Ethanol			○○○○	○○○○
Ethyl acrylate		○○○○		
Ethyl glycol				○○○○
Fixer			○○○○	
Fluoride (ammonium, K–, Na.a.)			○○○○	
Formaldehyde	50 %	○○○○		
Formamide	100 %	○○○○		
Formic acid	50 %	○○○○		
	100 %	○○		
Gasoline, aroma-free		○○○○		
Gasoline, containing benzol		○○○○		
Glucon acid		○○○○		
Glycerine				○○○○
Glycol				○○○○
Hydrochloric acid	10 %	–		
Hydrofluoric acid	Up to 40 %	○○○○		
Hydrogen peroxide	30 %	○○○○		
Hydroxide (alkaline earth metal)				○○○○
Hydroxide (ammonium)	10 %	○○○○		
Hydroxide (Na–, K–)	40 %	○○○○		
Hypochlorite (K–, Na.a.)				○○○○
Iodide (K–, Na.a.)				○○○○
Lactic acid	100 %	○○		
Methanol	100 %		○○○○	
Methylene chloride		–		
Mineral oils			○○○○	
Nitrate (ammonium, K.a.)				○○○○
Nitric acid	25 %	–		
Nitroglycerine		–		
Oxalic acid		○○○○		

	Concentration	20 °C	40 °C	60 °C
Phenol	1 %	○○○○		
Phosphate (ammonium, Na.a.)				○○○○
Phosphoric acid	50 %			○○○○
	85 %	○○○○		
Propanol		○○○○		
Silicic acid				○○○○
Soap solution				○○○○
Sulfate (ammonium, Na.a.)				○○○○
Sulfite (ammonium, Na.a.)				–
Sulphur dioxide	100 %	○○		
Sulphuric acid	40 %	–		
Sulphurous acid		○○		
Tar, aroma-free				○○○○
Tartaric acid		○○○○		
Trichloroethylene		–		
Turpentine		○○○○		
Uric acid		○○○○		
Urine		○○○○		

Abbreviations	
○○○○	Resistant
○○○	Virtually resistant
○○	Partially resistant
○	Less resistant
–	Not resistant
w.	Aqueous solution
k. g.	Cold saturated

Transponders RF340T, RF350T, 370T

The following table gives an overview of the chemical composition of the data memories made from polyamide 12. The plastic housing has a notably high resistance to chemicals used in automobiles (e.g.: oil, grease, diesel fuel, gasoline) which are not listed separately.

	Concentration	20 °C	60 °C
Acetic acid, w.	50	–	–
Ammonia gas		○○○○	○○○○
Ammonia, w.	conc.	○○○○	○○○○
	10	○○○○	○○○○
Battery acid	30	○○	–
Benzol		○○○○	○○○
Bleach solution (12.5% effective chlorine)		○○	–
Butane, gas, liquid		○○○○	○○○○
Butyl acetate (acetic acid butyl ester)		○○○○	○○○○
n(n)		○○○○	○○○
Calcium chloride, w.		○○○○	○○○
Calcium nitrate, w.	k. g.	○○○○	○○○
Carbon tetrachloride		○○○○	○○○○
Chlorine		–	–
Chrome baths, tech.		–	–
Detergent	High	○○○○	○○○○
Ethyl alcohol, w., undenaturated	96	○○○○	○○○
	50	○○○○	○○○○
Formaldehyde, w.	30	○○○	–
	10	○○○○	○○○
Formalin		○○○	–
Glycerine		○○○○	○○○○
Hydrochloric acid	10	○	–
Hydrogen sulphide	Low	○○○○	○○○○
Iron salts, w.	k. g.	○○○○	○○○○
Isopropanol		○○○○	○○○
Lactic acid, w.	50	○○	–
	10	○○○	○○
Lysol		○○	–
Magnesium salts, w.	k. g.	○○○○	○○○○
Mercury		○○○○	○○○○
Methyl alcohol, w.	50	○○○○	○○○○
Nickel salts, w.	k. g.	○○○○	○○○○
Nitric acid	10	○	–
Nitrobenzol		○○○	○○
Phosphoric acid	10	○	V
Plasticizer		○○○○	○○○○
Potassium hydroxide, w.	50	○○○○	○○○○
Propane		○○○○	○○○○

	Concentration	20 °C	60 °C
Sodium carbonate, w. (soda)	k. g.	○○○○	○○○○
Sodium chloride, w.	k. g.	○○○○	○○○○
Sodium hydroxide		○○○○	○○○○
Sulphur dioxide	Low	○○○○	○○○○
Sulphuric acid	25	○○	–
Toluene		○○○○	○○○

Abbreviations	
○○○○	Resistant
○○○	Virtually resistant
○○	Partially resistant
○	Less resistant
–	Not resistant
w.	Aqueous solution
k. g.	Cold saturated

Transponder RF380T

The housing of the heat-resistant data storage unit is made of polyphenylene sulfide (PPS). The chemical resistance of the data storage unit is excellent. No solvent is known that can dissolve the plastic at temperatures below 200 °C. A reduction in the mechanical properties has been observed in aqueous solutions of hydrochloric acid (HCl) and nitric acid (HNO3) at 80 °C. The excellent resistance to all fuel types including methanol is a particular characteristic. The following table provides an overview of the chemicals investigated.

Substance	Test conditions		Evaluation
	Time[days]	Temperature[°C]	
Acetone	180	55	+
Anti-freeze	180	120	+
Brake fluid	40	80	+
Butanon-2 (methyl ethyl ketone)	180	60	+
Calcium chloride (saturated)	40	80	+
Caustic soda (30%)	40	93	+
Diesel fuel	180	80	+
Diethyl ether	40	23	+
Engine oil	40	80	+
Frigen 113	40	23	+
Hydrochloric acid (10%)	40	80	–
Kerosine	40	60	+
Methanol	180	60	+
n-Butanol (butyl alcohol)	180	80	+
n-butyl acetate	180	80	+
Nitric acid (10%)	40	23	+
Sodium chloride (saturated)	40	80	+
Sodium hydroxide (30%)	180	80	+
Sodium hypochlorite (5%)	30	80	/
	180	80	–
Sulphuric acid (10%)	40	23	+
		(10%)	40
		(30%)	40
Tested fuels:	40	80	+
(FAM-DIN 51 604-A)	180	80	/
Toluene			
1, 1, 1-trichloroethane	180	80	+
Xylene			
Zinc chloride (saturated)	180	80	/
	180	75	+
	180	80	+
	40	80	+

	Test conditions	
Assessment:		
+	Resistant, weight gain < 3 % or weight loss < 0.5 % and/or reduction in fracture resistance < 15 %	
/	Partially resistant, weight gain 3 to 8 % or weight loss 0.5 to 3 % and/or reduction in fracture resistance 15 to 30 %	
–	Not resistant, weight gain > 8 % or weight loss > 3 % and/or reduction in fracture resistance > 30 %	

4.7 EMC Directives

4.7.1 Overview

These EMC Guidelines answer the following questions:

- Why are EMC guidelines necessary?
- What types of external interference have an impact on the system?
- How can interference be prevented?
- How can interference be eliminated?
- Which standards relate to EMC?
- Examples of interference-free plant design

The description is intended for "qualified personnel":

- Project engineers and planners who plan system configurations with RFID modules and have to observe the necessary guidelines.
- Fitters and service engineers who install the connecting cables in accordance with this description or who rectify defects in this area in the event of interference.

NOTICE
Failure to observe notices drawn to the reader's attention can result in dangerous conditions in the plant or the destruction of individual components or the entire plant.

4.7.2 What does EMC mean?

The increasing use of electrical and electronic devices is accompanied by:

- Higher component density
- More switched power electronics
- Increasing switching rates
- Lower power consumption of components due to steeper switching edges

The higher the degree of automation, the greater the risk of interaction between devices.

Electromagnetic compatibility (EMC) is the ability of an electrical or electronic device to operate satisfactorily in an electromagnetic environment without affecting or interfering with the environment over and above certain limits.

EMC can be broken down into three different areas:

- Intrinsic immunity to interference:
  immunity to internal electrical disturbance
- Immunity to external interference:
  immunity to external electromagnetic disturbance
- Degree of interference emission:
  emission of interference and its effect on the electrical environment

All three areas are considered when testing an electrical device.

The RFID modules are tested for conformity with the limit values required by the CE and RTTE guidelines. Since the RFID modules are merely components of an overall system, and sources of interference can arise as a result of combining different components, certain guidelines have to be followed when setting up a plant.

EMC measures usually consist of a complete package of measures, all of which need to be implemented in order to ensure that the plant is immune to interference.

Note

The plant manufacturer is responsible for the observance of the EMC guidelines; the plant operator is responsible for radio interference suppression in the overall plant.

All measures taken when setting up the plant prevent expensive retrospective modifications and interference suppression measures.

The plant operator must comply with the locally applicable laws and regulations. They are not covered in this document.

4.7.3 Basic rules

It is often sufficient to follow a few elementary rules in order to ensure electromagnetic compatiblity (EMC).

The following rules must be observed:

Shielding by enclosure

- Protect the device against external interference by installing it in a cabinet or housing. The housing or enclosure must be connected to the chassis ground.
- Use metal plates to shield against electromagnetic fields generated by inductances.
- Use metal connector housings to shield data conductors.

Wide-area ground connection

- Bond all passive metal parts to chassis ground, ensuring large-area and low-HF-impedance contact.
- Establish a large-area connection between the passive metal parts and the central grounding point.
- Don't forget to include the shielding bus in the chassis ground system. That means the actual shielding busbars must be connected to ground by large-area contact.
- Aluminium parts are not suitable for ground connections.

Plan the cable installation

- Break the cabling down into cable groups and install these separately.
- Always route power cables, signal cables and HF cables through separated ducts or in separate bundles.
- Feed the cabling into the cabinet from one side only and, if possible, on one level only.
- Route the signal cables as close as possible to chassis surfaces.
- Twist the feed and return conductors of separately installed cables.
- Routing HF cables:
  avoid parallel routing of HF cables.
- Do not route cables through the antenna field.

Shielding for the cables

- Shield the data cables and connect the shield at both ends.
- Shield the analog cables and connect the shield at one end, e.g. on the drive unit.
- Always apply large-area connections between the cable shields and the shielding bus at the cabinet inlet and make the contact with clamps.
- Feed the connected shield through to the module without interruption.
- Use braided shields, not foil shields.

Line and signal filter

- Use only line filters with metal housings
- Connect the filter housing to the cabinet chassis using a large-area low-HF-impedance connection.
- Never fix the filter housing to a painted surface.
- Fix the filter at the control cabinet inlet or in the direction of the source.

4.7.4 Propagation of electromagnetic interference

Three components have to be present for interference to occur in a system:

- Interference source
- Coupling path
- Interference sink

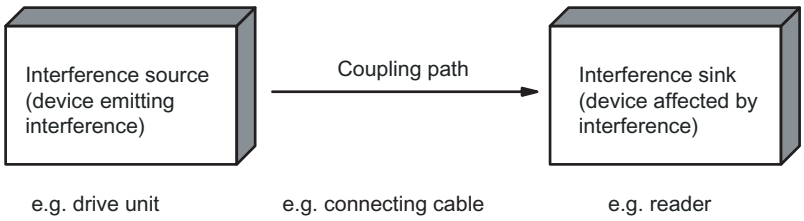

Figure 4-19 Propagation of interference

If one of the components is missing, e.g. the coupling path between the interference source and the interference sink, the interference sink is unaffected, even if the interference source is transmitting a high level of noise.

The EMC measures are applied to all three components, in order to prevent malfunctions due to interference. When setting up a plant, the manufacturer must take all possible measures in order to prevent the occurrence of interference sources:

- Only devices fulfilling limit class A of VDE 0871 may be used in a plant.
- Interference suppression measures must be introduced on all interference-emitting devices. This includes all coils and windings.
- The design of the system must be such that mutual interference between individual components is precluded or kept as small as possible.

Information and tips for plant design are given in the following sections.

Interference sources

In order to achieve a high level of electromagnetic compatibility and thus a very low level of disturbance in a plant, it is necessary to recognize the most frequent interference sources. These must then be eliminated by appropriate measures.

Table 4- 26 Interference sources: origin and effect

Interference source	Interference results from	Effect on the interference sink
Contactors, electronic valves	Contacts	System disturbances
	Coils	Magnetic field
Electrical motor	Collector	Electrical field
	Winding	Magnetic field
Electric welding device	Contacts	Electrical field
	Transformer	Magnetic field, system disturbance, transient currents
Power supply unit, switched-mode	Circuit	Electrical and magnetic field, system disturbance
High-frequency appliances	Circuit	Electromagnetic field
Transmitter (e.g. service radio)	Antenna	Electromagnetic field
Ground or reference potential difference	Voltage difference	Transient currents
Operator	Static charge	Electrical discharge currents, electrical field
Power cable	Current flow	Electrical and magnetic field, system disturbance
High-voltage cable	Voltage difference	Electrical field

What interference can affect RFID?

Interference source	Cause	Remedy
Switched-mode power supply	Interference emitted from the current infeed	Replace the power supply
Interference injected through the cables connected in series	Cable is inadequately shielded	Better cable shielding
	The reader is not connected to ground.	Ground the reader
HF interference over the antennas	caused by another reader	• Position the antennas further apart. • Erect suitable damping materials between the antennas. • Reduce the power of the readers. Please follow the instructions in the section *Installation guidelines/reducing the effects of metal*

Coupling paths

A coupling path has to be present before the disturbance emitted by the interference source can affect the system. There are four ways in which interference can be coupled in:

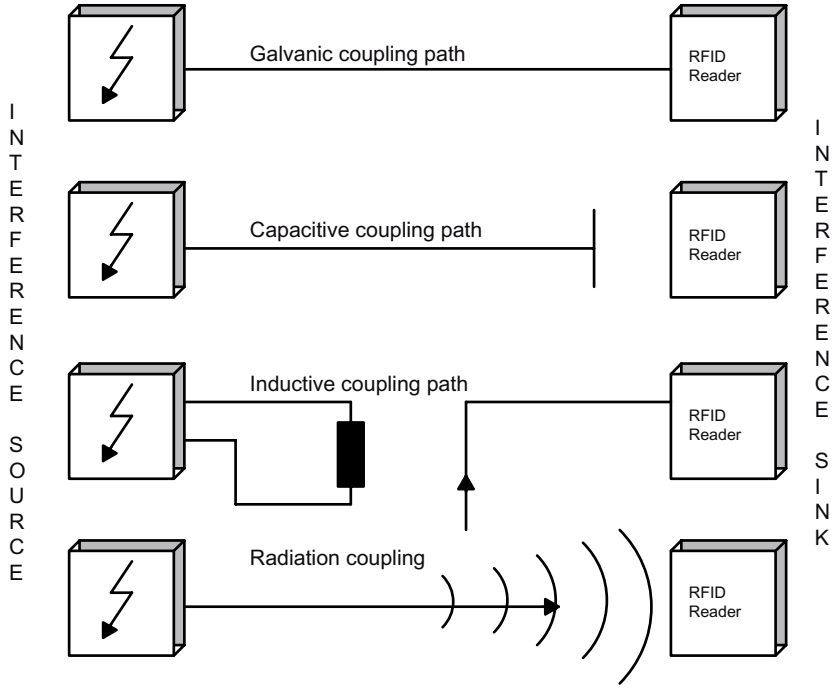

Figure 4-20 Ways in which interference can be coupled in

When RFID modules are used, different components in the overall system can act as a coupling path:

Table 4- 27 Causes of coupling paths

Coupling path	Invoked by
Conductors and cables	• Incorrect or inappropriate installation • Missing or incorrectly connected shield • Inappropriate physical arrangement of cables
Control cabinet or housing	• Missing or incorrectly wired equalizing conductor • Missing or incorrect earthing • Inappropriate physical arrangement • Components not mounted securely • Unfavorable cabinet configuration

4.7.5 Cabinet configuration

The influence of the user in the configuration of an electromagnetically compatible plant encompasses cabinet configuration, cable installation, ground connections and correct shielding of cables.

Note

For information about electromagnetically compatible cabinet configuration, please consult the installation guidelines for SIMATIC PLCs.

Shielding by enclosure

Magnetic and electrical fields and electromagnetic waves can be kept away from the interference sink by using a metal enclosure. The easier the induced interference current can flow, the greater the intrinsic weakening of the interference field. All enclosures and metal panels in the cabinet should therefore be connected in a manner allowing good conductance.

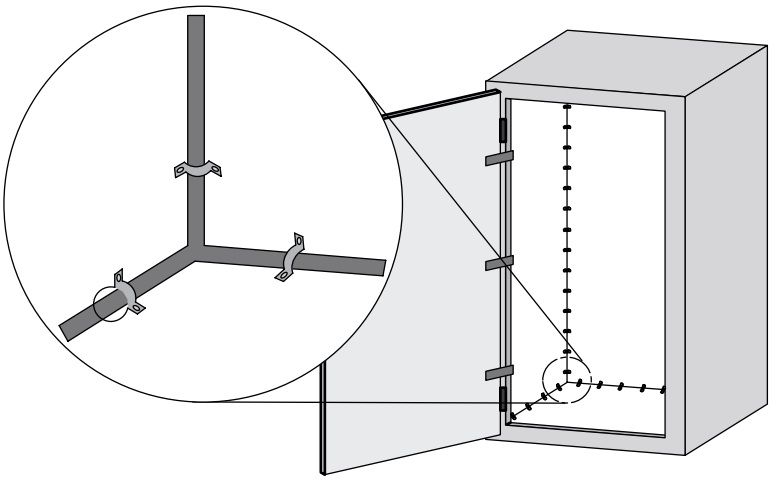

Figure 4-21 Shielding by enclosure

If the control cabinet panels are insulated from each other, a high-frequency-conducting connection can be established using ribbon cables and high-frequency terminals or HF conducting paste. The larger the area of the connection, the greater the high-frequency conductivity. This is not possible using single-wire connections.

Prevention of interference by optimum configuration

Good interference suppression can be achieved by installing SIMATIC PLCs on conducting mounting plates (unpainted). When setting up the control cabinet, interference can be prevented easily by observing certain guidelines. Power components (transformers, drive units, load power supply units) should be arranged separately from the control components (relay control unit, SIMATIC S7).

As a rule:

- The effect of the interference decreases as the distance between the interference source and interference sink increases.
- The interference can be further decreased by installing grounded shielding plates.
- The load connections and power cables should be installed separately from the signal cables with a minimum clearance of 10 cm.

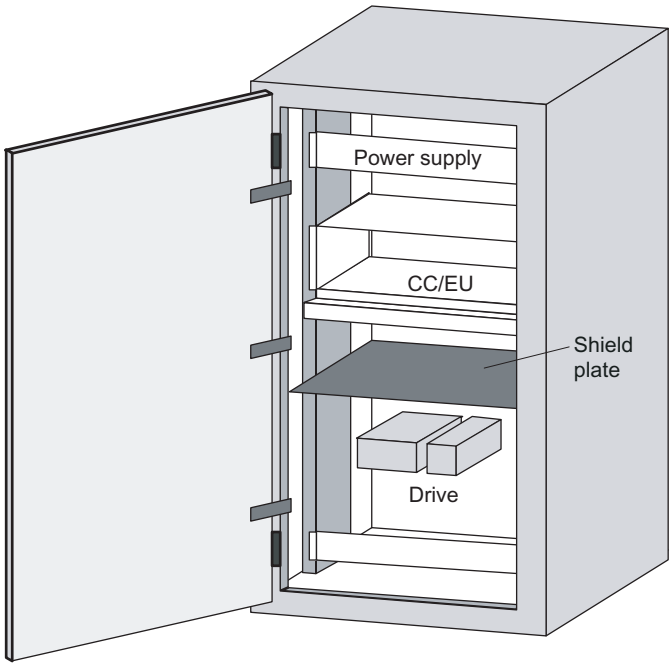

Figure 4-22 Prevention of interference by optimum configuration

Filtering of the supply voltage

External interference from the mains can be prevented by installing line filters. Correct installation is extremely important, in addition to appropriate dimensioning. It is essential that the line filter is mounted directly at the cabinet inlet. As a result, interference is filtered promptly at the inlet, and is not conducted through the cabinet.

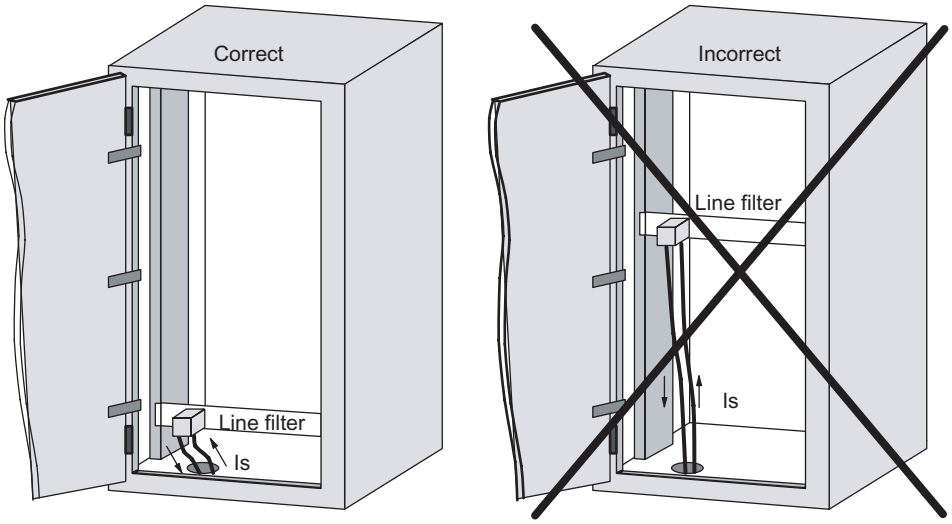

Ic = interference current

Figure 4-23 Filtering of the supply voltage

4.7.6 Prevention of interference sources

A high level of immunity to interference can be achieved by avoiding interference sources. All switched inductances are frequent sources of interference in plants.

Suppression of inductance

Relays, contactors, etc. generate interference voltages and must therefore be suppressed using one of the circuits below.

Even with small relays, interference voltages of up to 800 V occur on 24 V coils, and interference voltages of several kV occur on 230 V coils when the coil is switched. The use of freewheeling diodes or RC circuits prevents interference voltages and thus stray interference on conductors installed parallel to the coil conductor.

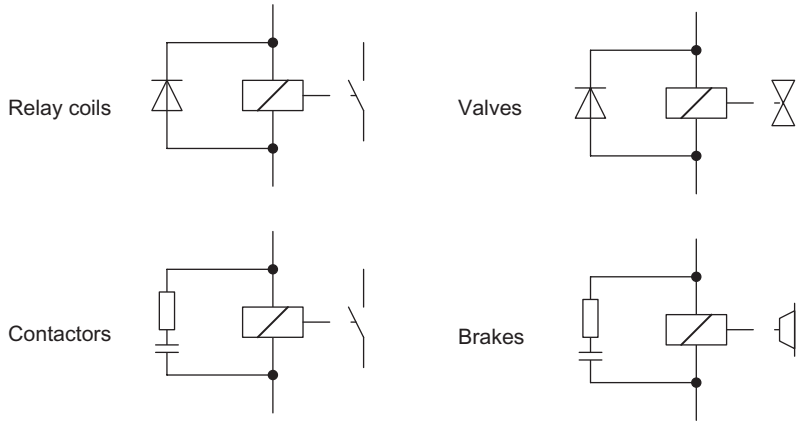

Figure 4-24 Suppression of inductance

Note

All coils in the cabinet should be suppressed. The valves and motor brakes are frequently forgotten. Fluorescent lamps in the control cabinet should be tested in particular.

4.7.7 Equipotential bonding

Potential differences between different parts of a plant can arise due to the different design of the plant components and different voltage levels. If the plant components are connected across signal cables, transient currents flow across the signal cables. These transient currents can corrupt the signals.

Proper equipotential bonding is thus essential.

- The equipotential bonding conductor must have a sufficiently large cross section (at least 10 mm^2).
- The distance between the signal cable and the associated equipotential bonding conductor must be as small as possible (antenna effect).
- A fine-strand conductor must be used (better high-frequency conductivity).
- When connecting the equipotential bonding conductors to the centralized equipotential bonding strip (EBS), the power components and non-power components must be combined.
- The equipotential bonding conductors of the separate modules must lead directly to the equipotential bonding strip.

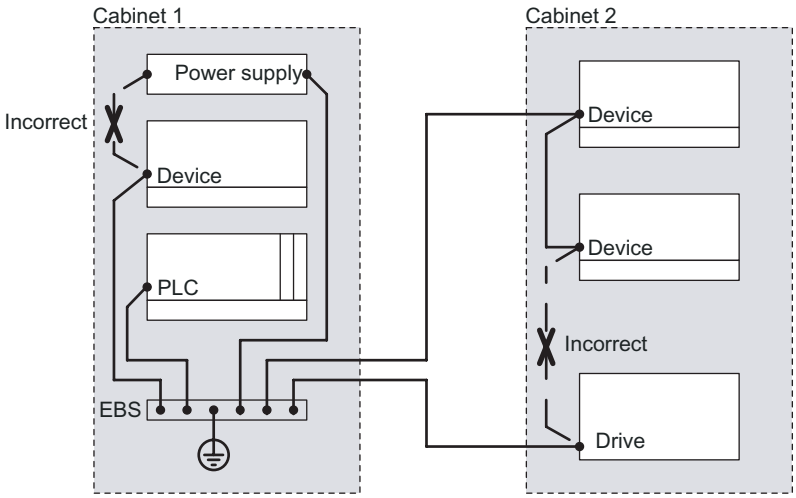

Figure 4-25 Equipotential bonding (EBS = Equipotential bonding strip)

The better the equipotential bonding in a plant, the smaller the chance of interference due to fluctuations in potential.

Equipotential bonding should not be confused with protective earthing of a plant. Protective earthing prevents the occurrence of excessive shock voltages in the event of equipment faults whereas equipotential bonding prevents the occurrence of differences in potential.

4.7.8 Cable shielding

Signal cables must be shielded in order to prevent coupling of interference.

The best shielding is achieved by installing the cables in steel tubes. However, this is only necessary if the signal cable is routed through an environment prone to particular interference. It is usually adequate to use cables with braided shields. In either case, however, correct connection is vital for effective shielding.

Note

An unconnected or incorrectly connected shield has no shielding effect.

As a rule:

- For analog signal cables, the shield should be connected at one end on the receiver side
- For digital signals, the shield should be connected to the enclosure at both ends
- Since interference signals are frequently within the HF range (> 10 kHz), a large-area HF-proof shield contact is necessary

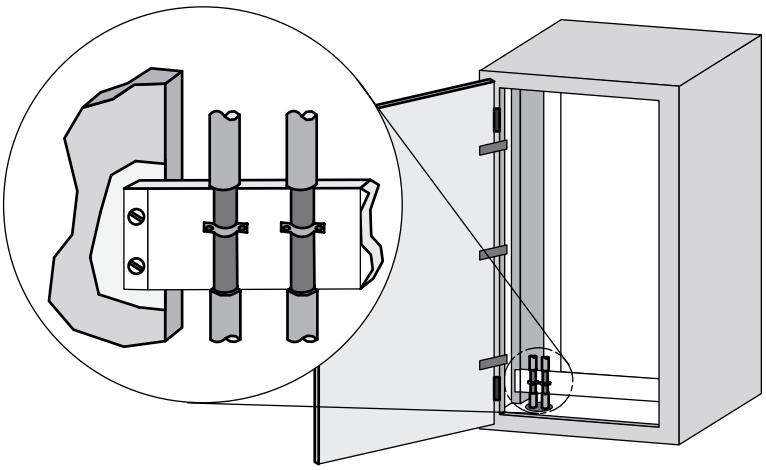

Figure 4-26 Cable shielding

The shielding bus should be connected to the control cabinet enclosure in a manner allowing good conductance (large-area contact) and must be situated as close as possible to the cable inlet. The cable insulation must be removed and the cable clamped to the shielding bus (high-frequency clamp) or secured using cable ties. Care should be taken to ensure that the connection allows good conductance.

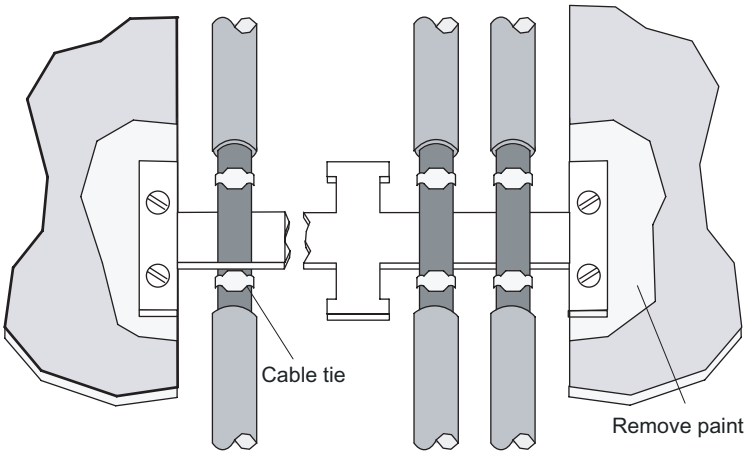

Figure 4-27 Connection of shielding bus

The shielding bus must be connected to the PE busbar.

If shielded cables have to be interrupted, the shield must be continued via the corresponding connector housing. Only suitable connectors may be used for this purpose.

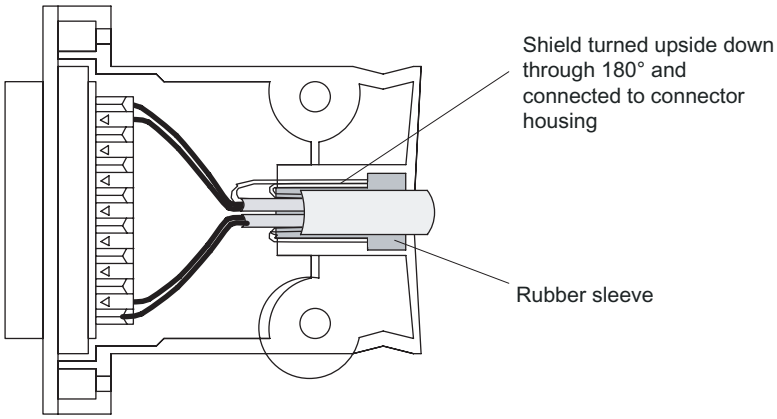

Figure 4-28 Interruption of shielded cables

If intermediate connectors, which do not have a suitable shield connection, are used, the shield must be continued by fixing cable clamps at the point of interruption. This ensures a large-area, HF-conducting contact.

Readers

5

Overview

The reader ensures inductive communication with the transponders, and handles the serial connection to the communication modules or the 8xIQ-Sense module.

Communication between the transponder and reader takes place over inductive alternating fields.

The transmittable data volume between reader and transponder depends on:

- the speed at which the transponder moves through the transmission window of the reader.
- the length of the transmission window.
- the RF300 transponder type (FRAM, EEPROM).
- the use of ISO transponders

ISO functionality

With the following readers, you can also use ISO tags:

- SIMATIC RF310R reader (with RS422 interface)
- SIMATIC RF380R reader

The readers must either be parameterized for the RF300 or ISO mode. The parameterization is done with the aid of the RESET message frame (INIT-Run).

You can find more detailed information on the software parameterization in Product Information "FB 45 and FC 45 input parameters for RF300 and ISO transponders" (http://support.automation.siemens.com/WW/view/en/33315697) or the Function Manuals FB 45 (http://support.automation.siemens.com/WW/view/en/21738808) and FC 45 (http://support.automation.siemens.com/WW/view/en/21737722) as of the A3 edition.

Note

ISO functionality is only possible with certain reader MLFBs.

Only the SIMATIC RF310R and SIMATIC RF380R readers with the MLFB 6GT2801-xxBxx are suitable for operating with ISO tags.

5.1 SIMATIC RF310R with IQ-Sense interface

5.1.1 Features

RF310R with IQ-Sense	Characteristics	
	Design	① IQ-Sense interface ② Status display
	Field of application	Identification tasks on small assembly lines in harsh industrial environments
	Read/write distance to transponder	Max. 35 mm
	Data transmission rate	• Read: approx. 50 bytes/s • Write: approx. 40 bytes/s

Note

SIMATIC RF310R with IQ-Sense interface is not suitable for combining with ISO tags.

5.1.2 Ordering data of RF310R with IQ-Sense interface

Table 5- 1

RF310R	Order number
• With IQ-Sense interface • IP67 • Operating temperature: -25 °C to +70 °C • Dimensions: 55 x 75 x 30 (L x W x H, in mm) • with integrated antenna • Max. limit distance: 35 mm (depending on transponder)	6GT2801-0AA00

5.1.3 Pin assignment of RF310R IQ-Sense interface

Table 5- 2 Pin assignment of RF310R with IQ-Sense interface

Pin	Pin, device end, 4-pin M12	Assignment
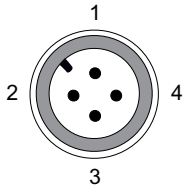	1	IQ-Sense
	2	Not assigned
	3	IQ-Sense
	4	Not connected

5.1.4 Display elements of the RF310R reader with IQ-Sense interface

Color	Meaning
Green	Operating voltage available
yellow	Transponder present
Red	Error occurred (see FC35 documentation, Section "Error messages and troubleshooting", Subsection "Error messages, error_MOBY")

5.1.5 Ensuring reliable data exchange

The "center point" of the transponder must be situated within the transmission window.

5.1.6 Metal-free area

The RF310R can be flush-mounted in metal. Please allow for a possible reduction in the field data values.

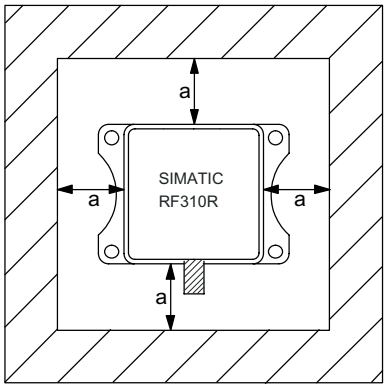

Figure 5-1 Metal-free area for RF310R

To avoid any impact on the field data, the distance a should be ≥ 20 mm.

5.1.7 Minimum distance between RF310R readers

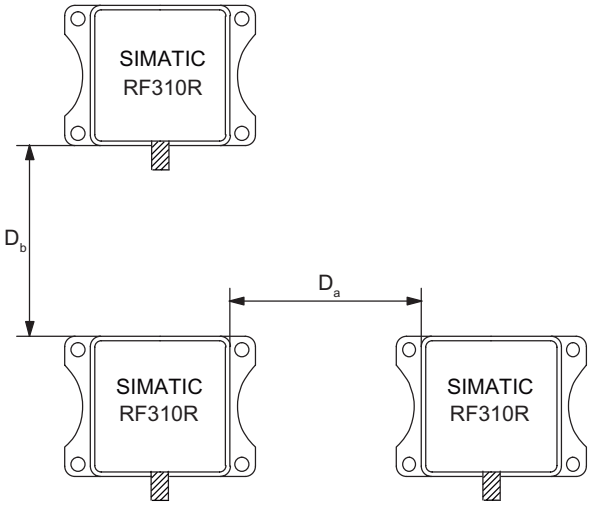

D_a ≥ 100 mm

D_b ≥ 100 mm

Figure 5-2 Minimum distance between RF310R readers

5.1.8 Technical data for RF310R reader with IQ-Sense interface

Table 5- 3 Technical specifications for RF310R reader with IQ-Sense interface

Inductive interface to the transponder Transmission frequency for power/data	 13.56 MHz
Interface to SIMATIC S7-300 Required master module RFID channels (RF310R) Mixed operation with other profiles	IQ-Sense, 2-wire non-polarized 8-IQ-Sense (6ES7 338-7XF00-0AB0) max. 2 per master module, max. 4 Opto-BEROs, 1x SIMATIC RF310R
Cable length reader - communication module	Max. 50 m (unshielded cable)
Read/write distances of reader	See Chapter Field data of RF300 transponders (Page 44)
Minimum distance between two RF310R readers	≥ 100 mm
Data transfer rate for read/write device Reading Writing	 Approx. 50 byte/s Approx. 40 byte/s
Passing speed Reading Writing	 Approx. 0.8 m/s (2 bytes) Approx. 0.8 m/s (2 bytes)
Function	Read, write, initialize transponder
Multi-tag	No
Power supply	via IQ-Sense master module 24 V DC
Display elements	2-color LED (operating voltage, presence, error)
Plug-in connector	M12 (4-pin)
Enclosure Dimensions (in mm) Color Material	 55 x 75 x 30 (without M12 enclosure connector) Anthracite Plastic PA 12
Fixing	4 x M5 screws
Ambient temperature during operation during transport and storage	 -25°C to +70°C -40°C to +85°C
Degree of protection to EN 60529 Shock to EN 60721-3-7 Class 7 M2 Vibration to EN 60721-3-7 Class 7 M2	IP67 50 g 20 g
Weight	Approx. 150 g
MTBF (Mean Time Between Failures) in years	153.5
Approvals	Radio to R&TTE guidelines EN 300 330, EN 301 489, CE, FCC, UL/CSA
Current consumption	Typ. 40 mA

5.1.9 FCC information

Siemens SIMATIC RF300 with IQ-Sense interface

FCC ID: NXW-RF310R-IQ

This device complies with Part 15 of the FCC Rules. Operation is subject to the following two conditions:

(1) This device may not cause harmful interference.

(2) This device must accept any interference received, including interference that may cause undesired operation.

Caution

Any changes or modifications not expressly approved by the party responsible for compliance could void the user's authority to operate the equipment.

5.1.10 Dimension drawing

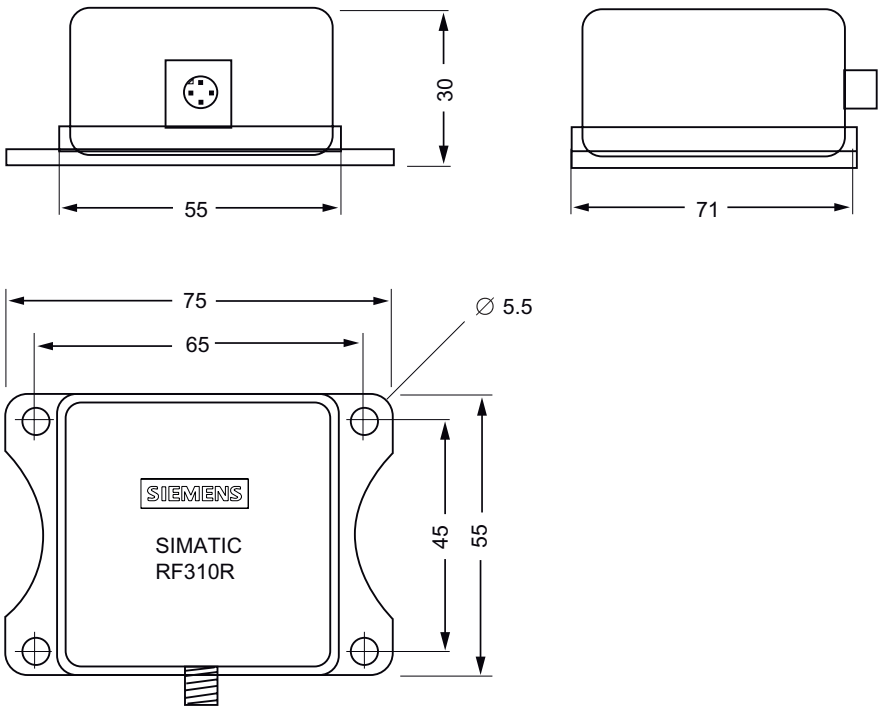

Figure 5-3 Dimension drawing for RF310R

Dimensions in mm

5.2 SIMATIC RF310R with RS422 interface

5.2.1 Features

RF310R with RS422	Characteristics		
	Design	① RS422 interface ② Status display	
	Field of application	Identification tasks on small assembly lines in harsh industrial environments	
	Read/write distance to transponder	Max. 35 mm	
	Data transmission rate	**RF300 tags**	**ISO tags**
	Read write	Approx. 8000 bytes/s Approx. 8000 bytes/s	Approx. 600 bytes/s Approx. 400 bytes/s

5.2.2 Ordering data for RF310R with RS422 interface

RF310R	Order number
• With RS422 interface (3964R) • IP67 • Operating temperature: -25 °C to +70 °C • Dimensions: 55 x 75 x 30 (L x W x H, in mm) • with integrated antenna • Max. limit distance: 35 mm (depending on transponder)	6GT2801-1AB10

5.2.3 Pin assignment of RF310R RS422 interface

Pin	Pin Device end 8-pin M12	Assignment
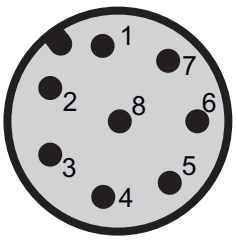	1	+ 24 V
	2	- Transmit
	3	0 V
	4	+ Transmit
	5	+ Receive
	6	- Receive
	7	Free
	8	Earth (shield)

5.2.4 Display elements of the RF310R reader with RS422 interface

Color		Meaning
Green	Flashing	Operating voltage present, reader not initialized or antenna switched off
	Permanently on	Operating voltage present, reader initialized and antenna switched on
Yellow[1)]		Transponder present
Flashing red		Error has occurred, the type of flashing corresponds to the error code in the table in Section "Error codes". The optical error display is only reset if the corresponding reset parameter ("option_1", see FC45 / FB45 documentation, Section "Input parameters") is set.

1) Only in the "with presence" mode.

5.2.5 Ensuring reliable data exchange

The "center point" of the transponder must be situated within the transmission window.

5.2.6 Metal-free area

The RF310R can be flush-mounted in metal. Please allow for a possible reduction in the field data values.

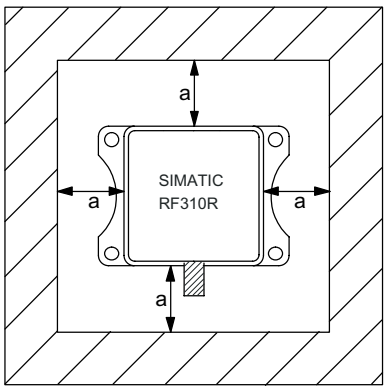

Figure 5-4 Metal-free area for RF310R

To avoid any impact on the field data, the distance a should be ≥ 20 mm.

5.2.7 Minimum distance between RF310R readers

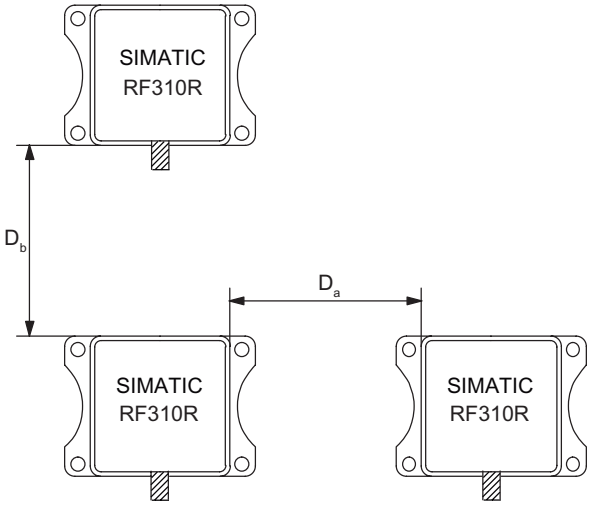

D_a ≥ 100 mm

D_b ≥ 200 mm

Figure 5-5 Minimum distance between RF310R readers

5.2.8 Technical specifications of the RF310R reader with RS422 interface

Table 5- 4 Technical specifications of the RF310R reader with RS422 interface

Inductive interface to the transponder Transmission frequency for power/data	13.56 MHz	
Antenna	integrated	
Interface to the communication module	RS422 (3964R protocol)	
Baud rate	19200 baud, 57600 baud, 115200 baud	
Cable length reader - communication module	Data cable length max. 1000 m (shielded cable)	
Read/write distances of reader	See Chapter Field data of RF300 transponders (Page 44)	
Minimum distance between two RF310R readers	≥ 100 mm or ≥ 200 mm	
Maximum data transmission range, reader - transponder (tag)	**RF300 tags**	**ISO tags**
Read write	Approx. 8000 bytes/s Approx. 8000 bytes/s	Approx. 600 bytes/s Approx. 400 bytes/s
Functions	Initialize/read/write transponder Scan status and diagnostics information Switch antenna on/off Repeat command Scan transponder serial numbers	
Power supply	24 V DC	
Display elements	2-color LED (operating voltage, presence, error)	
Plug-in connector	M12 (8-pin)	
Enclosure Dimensions (in mm) Color Material	 55 x 75 x 30 (without M12 plug connector) Anthracite Plastic PA 12	
Fixing	4 x M5 screws	
Ambient temperature during operation during transport and storage	 -25 °C to +70 °C -40 °C to +85 °C	
Degree of protection to EN 60529 Shock to EN 60721-3-7 Class 7 M2 Vibration to EN 60721-3-7 Class 7	IP67 50 g 20g	
Weight	Approx. 170 g	
MTBF (Mean Time Between Failures) in years	169.9	
Approvals	Radio to R&TTE guidelines EN 300 330, EN 301 489, CE, FCC, UL/CSA	
Current consumption	Typ. 50 mA	

5.2.9 FCC information

Siemens SIMATIC RF310R with RS422 interface

FCC ID: NXW-RF310R

This device complies with Part 15 of the FCC Rules. Operation is subject to the following two conditions:

(1) This device may not cause harmful interference.

(2) This device must accept any interference received, including interference that may cause undesired operation.

Caution

Any changes or modifications not expressly approved by the party responsible for compliance could void the user's authority to operate the equipment.

5.2.10 Dimension drawing

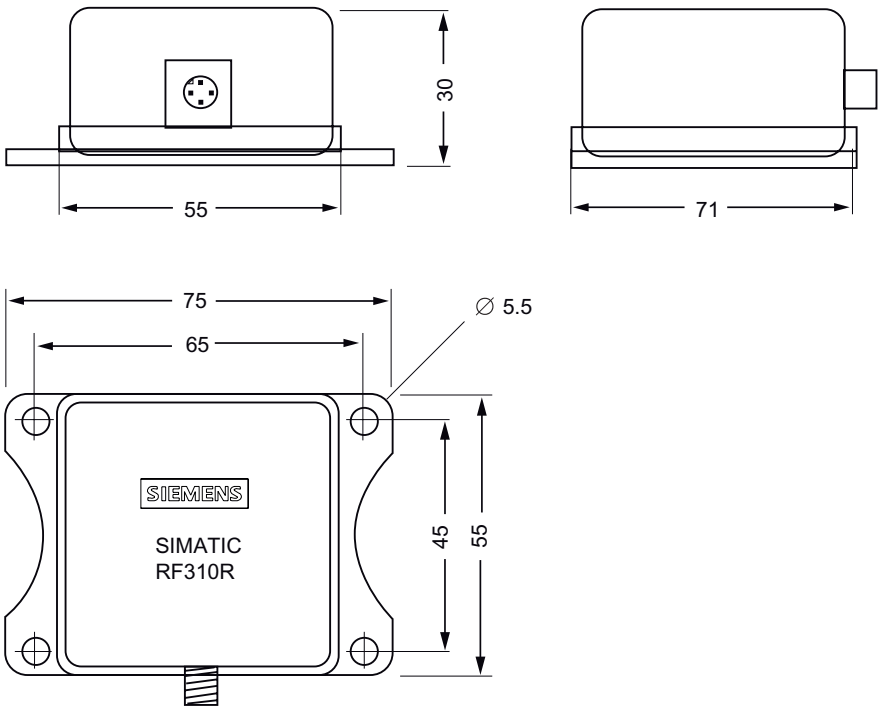

Figure 5-6 Dimension drawing for RF310R

Dimensions in mm

5.3 SIMATIC RF340R

5.3.1 Features

RF340R	Characteristics	
	Design	① RS422 interface ② Status display
	Field of application	Identification tasks on assembly lines in harsh industrial environments
	Read/write distance to transponder	Max. 65 mm
	Data transmission rate	• Read: approx. 8000 bytes/s • Write: approx. 8000 bytes/s

5.3.2 Ordering data for RF340R

RF340R	Order number
• With RS422 interface (3964R) • IP67 • Operating temperature -25 °C … +70 °C • Dimensions 75 x 91 x 41 (L x W x H in mm) • with integrated antenna • Max. limit distance: 65 mm (depending on transponder)	6GT2801-2AA10

5.3.3 Pin assignment of RF340R RS422 interface

Pin	Pin Device end 8-pin M12	Assignment
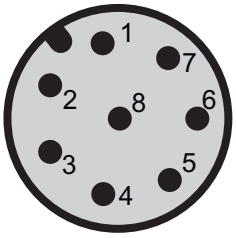	1	+ 24 V
	2	- Transmit
	3	0 V
	4	+ Transmit
	5	+ Receive
	6	- Receive
	7	Free
	8	Earth (shield)

5.3.4 Display elements of the RF340R reader

Color		Meaning
Green	Flashing	Operating voltage present, reader not initialized or antenna switched off
	Permanently on	Operating voltage present, reader initialized and antenna switched on
Yellow[1)]		Transponder present
Flashing red		Error has occurred, the type of flashing corresponds to the error code in the table in Section "Error codes". The optical error display is only reset if the corresponding reset parameter ("option_1", see FC45 / FB45 documentation, Section "Input parameters") is set.

1) Only in the "with presence" mode.

5.3.5 Ensuring reliable data exchange

The "center point" of the transponder must be situated within the transmission window.

5.3.6 Metal-free area

The RF340R can be flush-mounted in metal. Please allow for a possible reduction in the field data values.

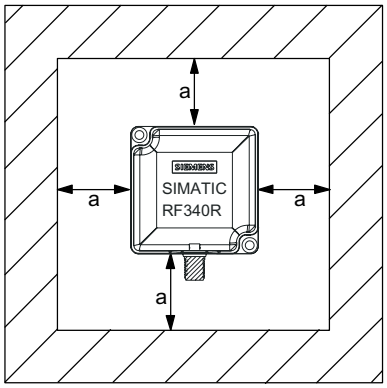

Figure 5-7 Metal-free area for RF340R

To avoid any impact on the field data, the distance a should be ≥ 20 mm.

5.3.7 Minimum distance between RF340R readers

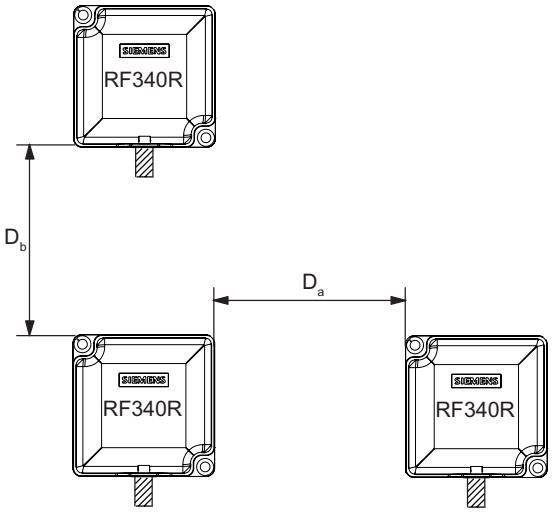

D_a ≥ 100 mm

D_b ≥ 250 mm

Figure 5-8 Minimum distance between RF340R readers

5.3.8 Technical data of the RF340R reader

Table 5- 5 Technical specifications of the RF340R reader

Inductive interface to the transponder Transmission frequency for power/data	 13.56 MHz
Antenna	integrated
Interface to the communication module	RS422 (3964R protocol)
Baud rate	19200 baud, 57600 baud, 115200 baud
Cable length reader - communication module	Data cable length max. 1000 m (shielded cable)
Read/write distances of reader	See Chapter Field data of RF300 transponders (Page 44)
Minimum distance between two RF340R readers	≥ 100 mm or ≥ 250 mm
Maximum data transfer rate reader - transponder (tag) Reading Writing	 Approx. 8000 byte/s Approx. 8000 byte/s
Functions	Initialize/read/write transponder Scan status and diagnostics information Switch antenna on/off Repeat command Scan transponder serial numbers
Power supply	24 V DC
Display elements	2-color LED (operating voltage, presence, error)
Plug-in connector	M12 (8-pin)
Enclosure Dimensions (in mm) Color Material	 75 x 75 x 40 (without M12 device connector) Anthracite Plastic PA 12
Fixing	2 x M5 screws
Ambient temperature during operation during transport and storage	 -25 °C to +70 °C -40 °C to +85 °C
Degree of protection to EN 60529 Shock to EN 60721-3-7 Class 7 M2 Vibration to EN 60721-3-7 Class 7 M2	IP 67 50 g 20 g
Weight	Approx. 250 g
MTBF (Mean Time Between Failures) in years	140
Approvals	Radio to R&TTE guidelines EN 300 330, EN 301 489, CE, FCC, UL/CSA
Current consumption	Typ. 100 mA

5.3.9 FCC information

Siemens SIMATIC RF340R

FCC ID: NXW-RF340R

This device complies with Part 15 of the FCC Rules. Operation is subject to the following two conditions:

(1) This device may not cause harmful interference.

(2) This device must accept any interference received, including interference that may cause undesired operation.

Caution

Any changes or modifications not expressly approved by the party responsible for compliance could void the user's authority to operate the equipment.

5.3.10 Dimension drawing

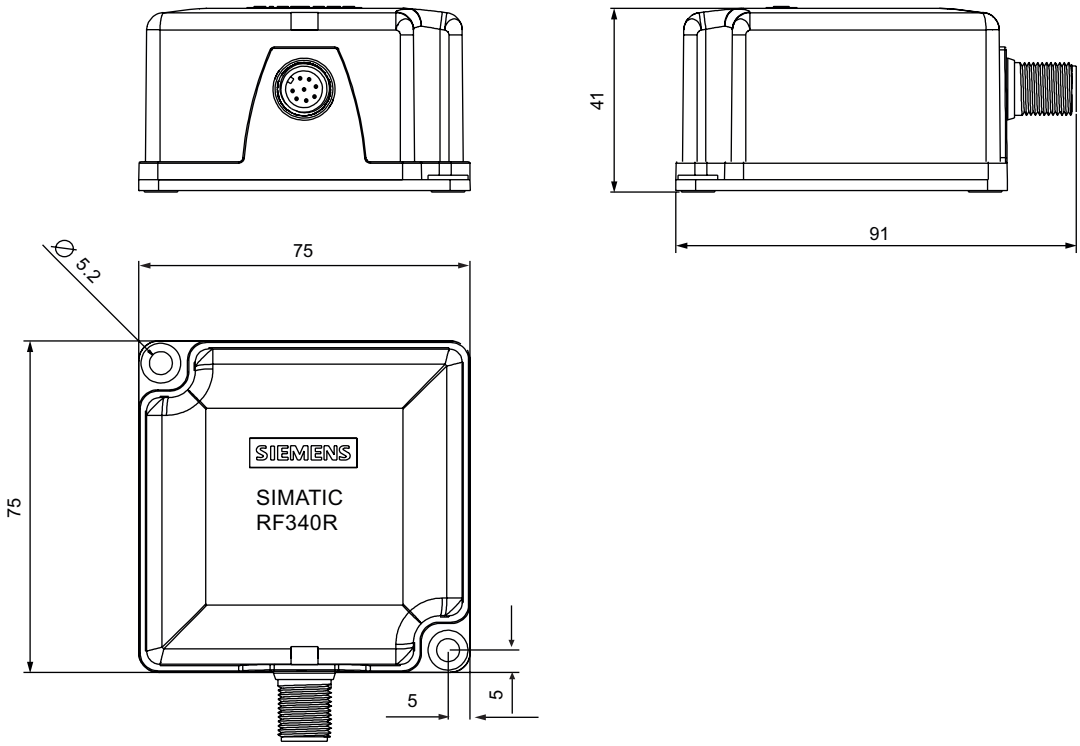

Figure 5-9 Dimension drawing for RF340R

Dimensions in mm

5.4 SIMATIC RF350R

5.4.1 Features

RF350R	Characteristics	
	Design	① Antenna connection ② RS422 interface ③ Status display
	Field of application	Identification tasks in assembly lines in harsh industrial environments; for external antennas (ANT 1, ANT 18, ANT 30)
	Read/write distance to transponder	Max. 60 mm
	Data transmission rate	• Read: approx. 8000 bytes/s • Write: approx. 8000 bytes/s

5.4.2 Ordering data for RF350R

RF350R	Order number
• With RS422 interface (3964R) • IP65 • Operating temperature: -25 °C … +70 °C • Dimensions: 75 x 96 x 41 (L x W x H, in mm) • For pluggable antennas ANT 1, ANT 18, ANT 30	6GT2801-4AA10

5.4.3 Pin assignment of RF350R RS422 interface

Pin	Pin Device end 8-pin M12	Assignment
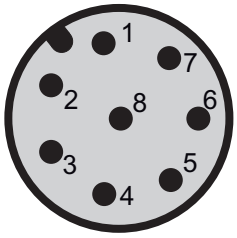	1	+ 24 V
	2	- Transmit
	3	0 V
	4	+ Transmit
	5	+ Receive
	6	- Receive
	7	Free
	8	Earth (shield)

5.4.4 Display elements of the RF350R reader

Table 5- 6

Color		Meaning
Green	Flashing	Operating voltage present, reader not initialized or antenna switched off
	Permanently on	Operating voltage present, reader initialized and antenna switched on
Yellow[1)]		Transponder present
Flashing red		Error has occurred, the type of flashing corresponds to the error code in the table in Section "Error codes". The optical error display is only reset if the corresponding reset parameter ("option_1", see FC45 / FB45 documentation, Section "Input parameters") is set.

1) Only in the "with presence" mode.

5.4.5 Ensuring reliable data exchange

The "center point" of the transponder must be situated within the transmission window.

5.4.6 Metal-free area

The RF350R reader does not have an internal antenna. Operation is not affected by mounting on metal or flush-mounting in metal. For information about the metal-free area required by the external antennas, refer to the corresponding section of the chapter Antennas (Page 113).

5.4.7 Technical data of the RF350R reader

Table 5- 7 Technical specifications of the RF350R reader

Inductive interface to the transponder Transmission frequency for power/data	 13.56 MHz
Antenna	External, antennas ANT 1, ANT 18 or ANT 30
Interface to the communication module	RS422 (3964R protocol)
Baud rate	19200 baud, 57600 baud, 115200 baud
Cable length reader - communication module	Data cable length max. 1000 m (shielded cable)
Read/write distances of reader	See Chapter Field data of RF300 transponders (Page 44)
Minimum distance between two antennas	See Chapter Minimum clearances (Page 48)
Maximum data transfer rate reader - transponder (tag) Reading Writing	 Approx. 8000 byte/s Approx. 8000 byte/s
Functions	Initialize/read/write transponder Scan status and diagnostics information Switch antenna on/off Repeat command Scan transponder serial numbers
Power supply	24 V DC
Display elements	2-color LED (operating voltage, presence, error)
Plug-in connector	M12 (8-pin); M8 (4-pin) for antenna
Enclosure Dimensions (in mm) Color Material	 75 x 75 x 40 (without M12 plug connector) Anthracite Plastic PA 12
Fixing	2 x M5 screws
Ambient temperature during operation during transport and storage	 -25 °C to +70 °C -40 °C to +85 °C
Degree of protection to EN 60529 Shock to EN 60721-3-7 Class 7 M2 Vibration to EN 60721-3-7 Class 7 M2	IP 65 50 g 20 g
Weight	250 g
MTBF (Mean Time Between Failures) in years	140
Approvals	Radio to R&TTE guidelines EN 300 330, EN 301 489, CE, FCC, UL/CSA
Current consumption	Typ. 100 mA

5.4.8 FCC information

Siemens SIMATIC RF350R

FCC ID: NXW-RF350R

This device complies with Part 15 of the FCC Rules. Operation is subject to the following two conditions:

(1) This device may not cause harmful interference.

(2) This device must accept any interference received, including interference that may cause undesired operation.

Caution

Any changes or modifications not expressly approved by the party responsible for compliance could void the user's authority to operate the equipment.

5.4.9 Dimension drawing

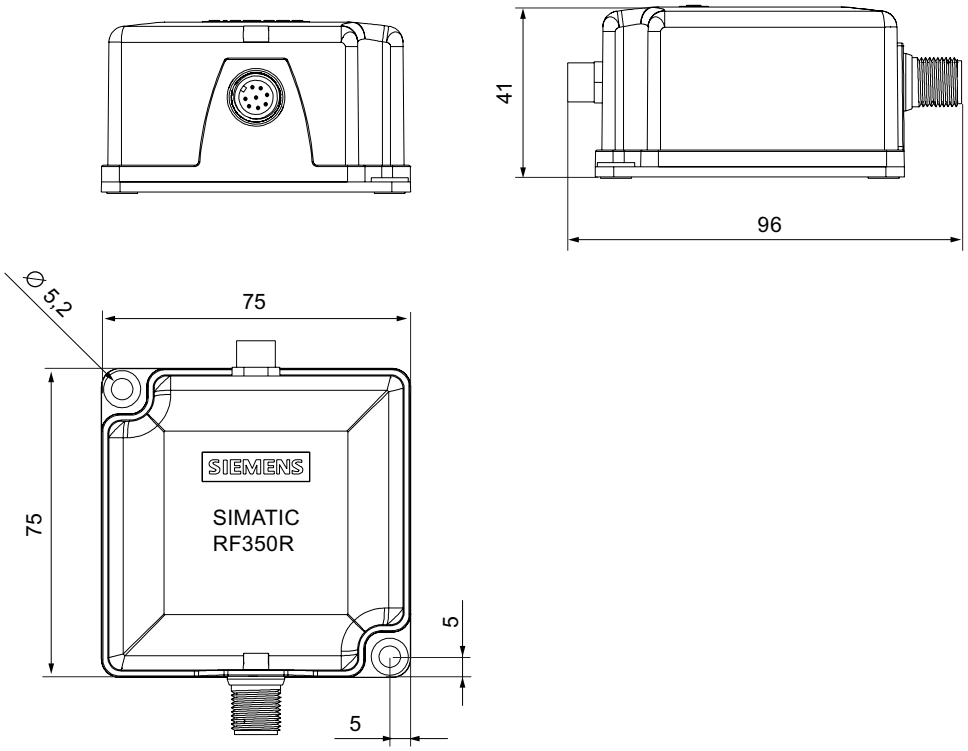

Figure 5-10 RF350R dimension drawing

Dimensions in mm

5.4.10 Antennas

5.4.10.1 Features

For the RF350R reader, you can use the following pluggable antennas:

Antenna	Product photo	Limit distance S_g in mm [1]	Dimensions (L x B x H) in mm	Suitable for dynamic operation
ANT 1		to 60	75 x 75 x 20	Yes
ANT 18		to 13	Ø M18 x 50	No
ANT 30		to 22	Ø M30 x 58	No

[1] Depending on the transponder used

ANT 1

The ANT 1 is an antenna in the mid performance range and can be used to the customer's advantage in production and assembly lines due to its manageable housing shape. The antenna dimensions make it possible to read/write large quantities of data dynamically from/to the tag during operation. The antenna cable can be connected at the reader end.

ANT 18

The ANT 18 is designed for use in small assembly lines. Due to its small, compact construction, the antenna can be easily positioned for any application using two plastic nuts (included in the package). The antenna cable can be connected at the reader end. Data communication is only possible with the RF320T and RF340T tags in static mode.

ANT 30

The ANT 30 is designed for use in small assembly lines. In comparison to ANT 18, the maximum write/read distance is approximately 60 % larger. Due to its compact construction, the antenna can be easily positioned for any application using two plastic nuts (included in the package). The antenna cable can be connected at the reader end. With the RF320T, RF340T and RF350T tags, communication with the data storage unit is only possible in static mode.

5.4.10.2 Ordering data for antennas

Antenna	Order number
ANT 1	6GT2398-1CB00
ANT 18	6GT2398-1CA00
ANT 30	6GT2398-1CD00

5.4.10.3 Ensuring reliable data exchange

The "center point" of the transponder must be situated within the transmission window.

5.4.10.4 Metal-free area

The antennas ANT1, ANT18 and ANT30 can be flush-mounted on metal. Please allow for a possible reduction in the field data values. During installation, maintain the minimum distances (a and b) on/flush with the metal.

NOTICE
Reduction of range if the metal-free space is not maintained At values lower than a and b, the field data changes significantly, resulting in a reduction in the limit distance and operating distance. Therefore, during installation, maintain the minimum distances (a and b) on/flush with the metal.

Metal-free space for flush-mounted installation of ANT 1

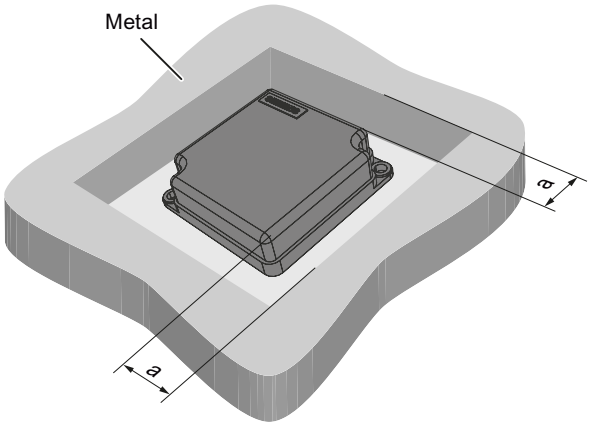

a = 40 mm

Figure 5-11 Metal-free area for ANT 1

Metal-free space for flush-mounted installation of ANT 18

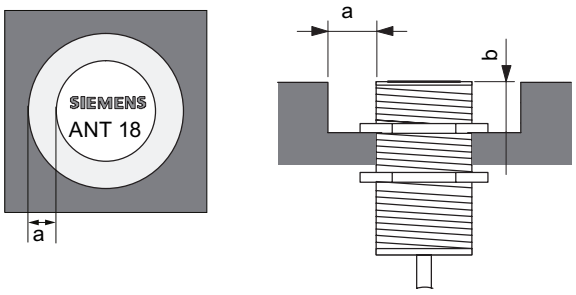

a = 10 mm

b = 10 mm

Metal-free space for flush-mounted installation of ANT 30

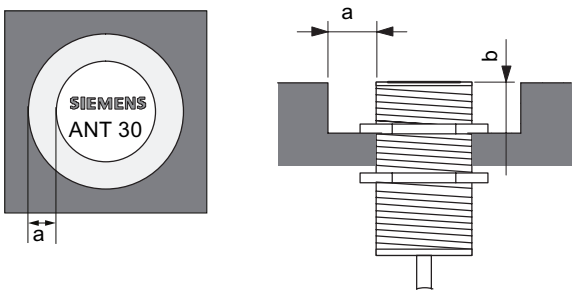

a = 20 mm

b = 20 mm

Figure 5-12 Metal-free area for ANT 30

5.4.10.5 Minimum distance between antennas

Minimum distance for ANT 1

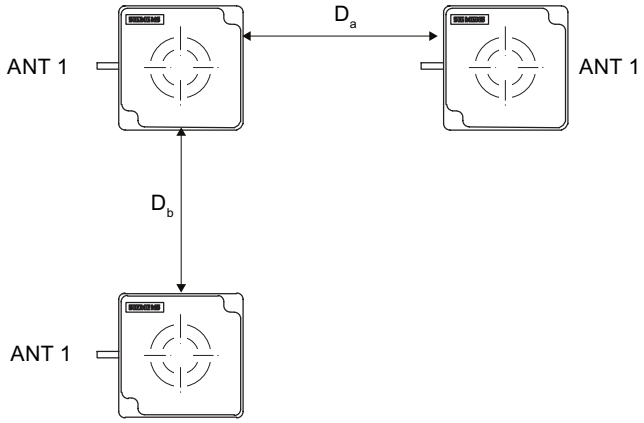

D_a ≥ 100 mm

D_b ≥ 250 mm

Figure 5-13 Minimum distance for ANT 1

The reader electronics can be mounted directly alongside each other.

Minimum distance for ANT 18

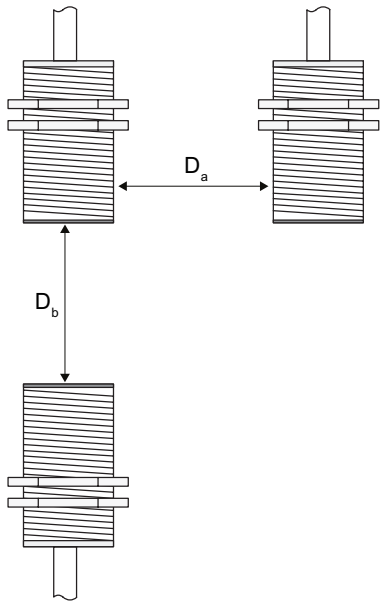

D_a ≥ 100 mm

D_b ≥ 200 mm

Figure 5-14 Minimum distance for ANT 18

Minimum distance for ANT 30

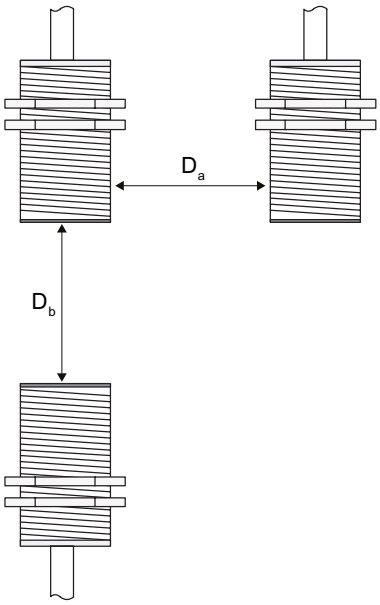

D_a ≥ 100 mm

D_b ≥ 250 mm

Figure 5-15 Minimum distance for ANT 30

5.4.10.6 Technical data for antennas

Table 5- 8 Technical data for antennas ANT1, ANT18 and ANT30

	ANT 1	ANT 18	ANT 30
Read/write distance antenna to transponder (Sg) max	100 mm	15 mm	22 mm
Enclosure dimensions in mm	75 x 75 x 20 (L x W x H)	M18 x 1.0 x 55 (Ø x thread x L)	M30 x 1.5 x 58 (Ø x thread x L)
Color	Anthracite	Pale turquoise	
Material	Plastic PA 12	Plastic Crastin	
Plug connection	4-pin (pins on antenna side)		
Antenna cable lengths	3 m		
Degree of protection to EN 60529	IP 67	IP 67 (at the front)	
Shock-resistant acc. to EN 60721-3-7, Class 7M2	50 g [1]		
Vibration-resistant to EN 60721-3-7, Class 7M2	20 g (3 to 500 Hz) [1]		
Attachment of the antenna	2 x M5 screws	2 plastic nuts M18 x 1.0	2 plastic nuts M30 x 1.5
Ambient temperature • Operation • Transport and storage	 • -25 °C to +70 °C • -40 °C to +85 °C		
MTBF (at +40 °C)	2.5 x 10^5 hours		
Approx. weight	80 g	120 g	150 g

[1] Warning: The values for shock and vibration are maximum values and must not be applied continuously.

5.4.10.7 Dimension drawings for antennas

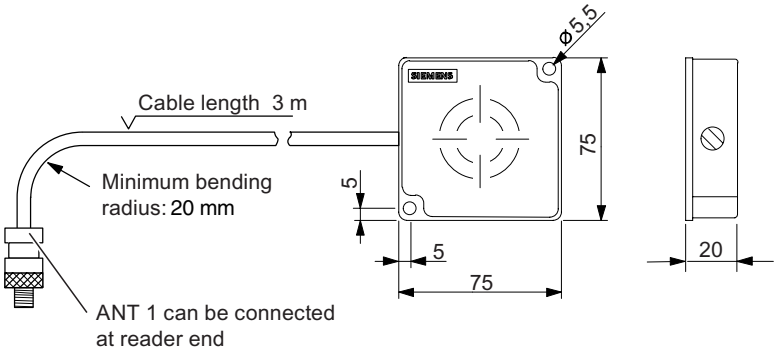

Figure 5-16 Dimension drawing for ANT 1

Dimensions in mm

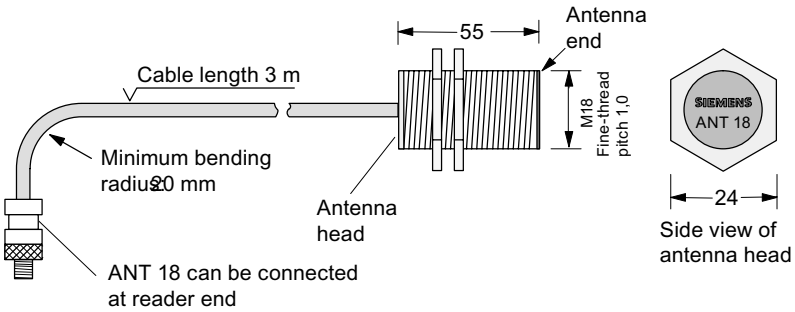

Figure 5-17 Dimension drawing for ANT 18

Dimensions in mm

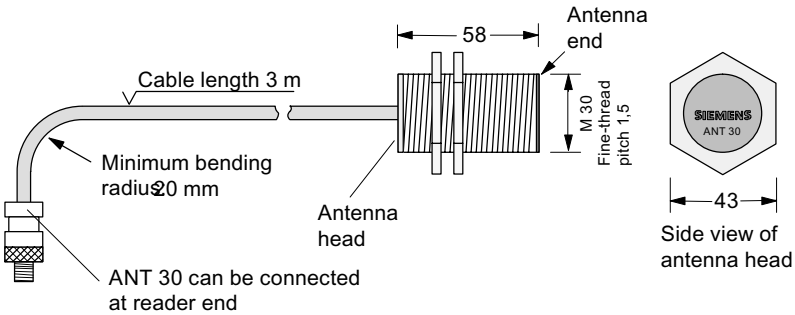

Figure 5-18 Dimension drawing for ANT 30

Dimensions in mm

5.5 SIMATIC RF380R

5.5.1 Features

RF380R	Characteristics		
	Design	① RS232 or RS422 interface ② Status display	
	Field of application	Identification tasks on assembly lines in harsh industrial environments	
	Read/write distance to transponder	Max. 125 mm	
	Data transmission rate	**RF300 tags**	**ISO tags**
	Read write	Approx. 8000 bytes/s Approx. 8000 bytes/s	Approx. 600 bytes/s Approx. 400 bytes/s

5.5.2 RF380R ordering data

RF380R	Order number
• With RS422 interface (3964R) • IP67 • Operating temperature: -25 °C … +70 °C • Dimensions: 160 x 96 x 40 (L x W x H, in mm) • with integrated antenna • max. limit distance 150 mm (dependent on transponder)	6GT2801-3AB10

5.5.3 Pin assignment of RF380R RS232/RS422 interface

You can connect the RF380R reader to a higher-level system via the internal RS422 interface or via the RS232 interface. After connection, the interface module automatically detects which interface has been used.

Note correct assignment of the pins here:

Pin	Pin Device end 8-pin M12	Assignment	
		RS232	RS422
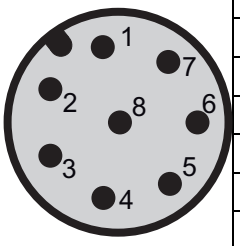	1	+ 24 V	+ 24 V
	2	RXD	- Transmit
	3	0 V	0 V
	4	TXD	+ Transmit
	5	NC	+ Receive
	6	NC	- Receive
	7	not used	not used
	8	Earth (shield)	Earth (shield)

5.5.4 Display elements of the RF380R reader

Table 5- 9

Color		Meaning
Green	Flashing	Operating voltage present, reader not initialized or antenna switched off
	Permanently on	Operating voltage present, reader initialized and antenna switched on
Yellow[1)]		Transponder present
Flashing red		Error has occurred, the type of flashing corresponds to the error code in the table in Section "Error codes". The optical error display is only reset if the corresponding reset parameter ("option_1", see FC45 / FB45 documentation, Section "Input parameters") is set.

1) Only in the "with presence" mode.

5.5.5 Ensuring reliable data exchange

The "center point" of the transponder must be situated within the transmission window.

5.5.6 Metal-free area

The RF380R can be flush-mounted in metal. Please allow for a possible reduction in the field data values.

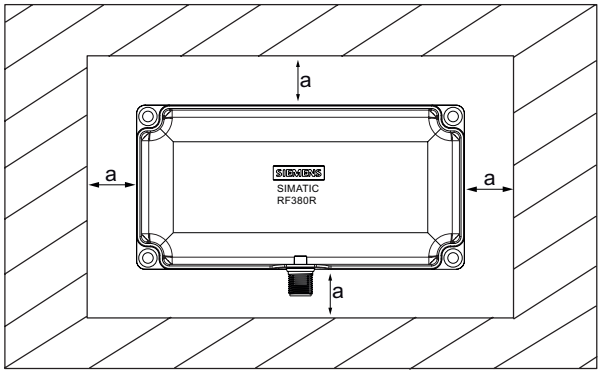

Figure 5-19 Metal-free area for RF380R

To avoid any impact on the field data, the distance a should be ≥ 20 mm.

5.5.7 Minimum distance between RF380R readers

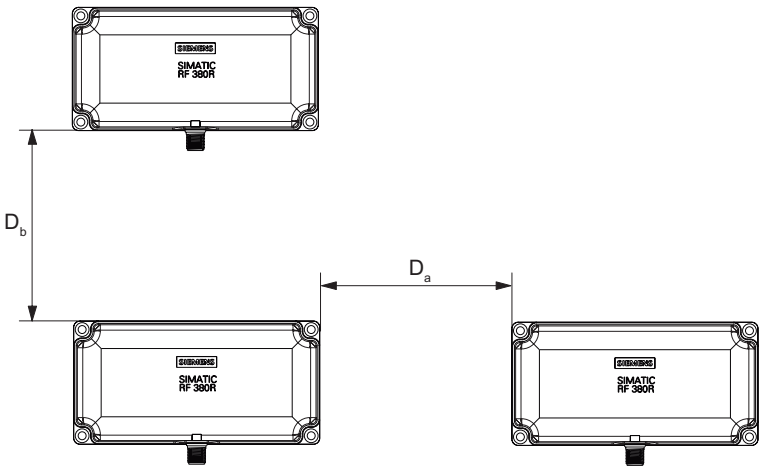

D_a ≥ 400 mm

D_b ≥ 400 mm

Figure 5-20 Minimum distance between RF380R readers

5.5.8 Technical specifications of the RF380R reader

Table 5- 10 Technical specifications of the RF380R reader

Inductive interface to the transponder Transmission frequency for power/data	13.56 MHz	
Antenna	integrated	
Interface to the communication module	RS232 or RS422 (3964R protocol)	
Baud rate	19200 baud, 57600 baud, 115200 baud	
Cable length reader - communication module	RS422 data cable length: max. 1000 m RS232 data cable length: Max. 30 m	
Read/write distances of reader	See Chapter Field data of RF300 transponders (Page 44)	
Minimum distance between two RF380R readers	≥ 500 mm	
Maximum data transmission range reader - transponder (tag)	**RF300 tags**	**ISO tags**
Read write	Approx. 8000 bytes/s Approx. 8000 bytes/s	Approx. 600 bytes/s Approx. 400 bytes/s
Functions	Initialize/read/write transponder Scan status and diagnostics information Switch antenna on/off Repeat command Scan transponder serial numbers	
Power supply	24 V DC	
Display elements	2-color LED (operating voltage, presence, error)	
Plug-in connector	M12 (8-pin)	
Enclosure Dimensions (in mm) Color Material	 160 x 80 x 40 (without M12 plug connector) Anthracite Plastic PA 12	
Fixing	4 x M5 screws	
Ambient temperature during operation during transport and storage	-25 °C to +70 °C -40 °C to +85 °C	
Degree of protection to EN 60529 Shock to EN 60721-3-7 Class 7 M2 Vibration to EN 60721-3-7 Class 7 M2	IP67 50 g 20 g	
Weight	Approx. 600 g	
MTBF (Mean Time Between Failures) in years	109 years	
Approvals	Radio to R&TTE guidelines EN 300 330, EN 301 489, CE, FCC, UL/CSA	
Current consumption	Typ. 160 mA	

5.5.9 FCC information

Siemens SIMATIC RF380RFCC ID: NXW-RF380R

This device complies with part 15 of the FCC rules. Operation is subject to the following two conditions:

(1) This device may not cause harmful interference.

(2) This device must accept any interference received, including interference that may cause undesired operation.

Caution

Any changes or modifications not expressly approved by the party responsible for compliance could void the user's authority to operate the equipment.

5.5.10 Dimension drawing

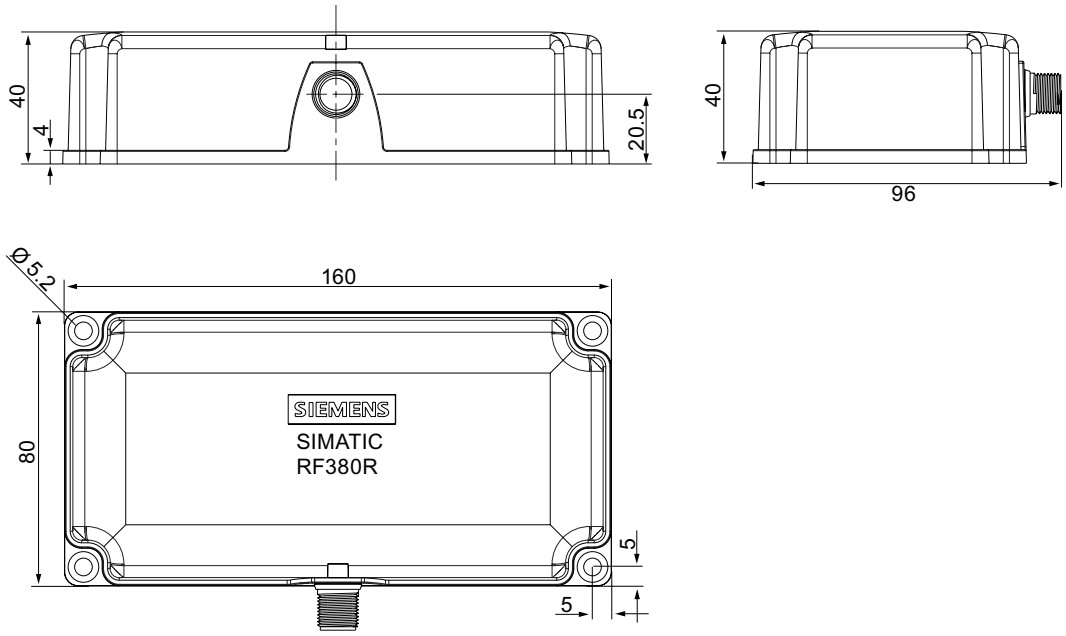

Figure 5-21 Dimension drawing RF380R

Dimensions in mm

RF300 transponder

6

6.1 Overview of RF300 tags

Characteristics of the RF300 tags

The RF300 tags (RF3xxT) stand out particularly for their extremely fast data exchange with the RF300 readers (RF3xxR). With the exception of the RF320T transponder, all of the RF300 tags have 8 to 64 KB of FRAM memory, which has an almost unlimited capacity for read/write actions.

RF300 tags

The following RF300 tags can be used at any time with RF300:

- RF320T
- RF340T
- RF350T
- RF360T
- RF370T
- RF380T

6.2 Memory configuration of the RF300 tags

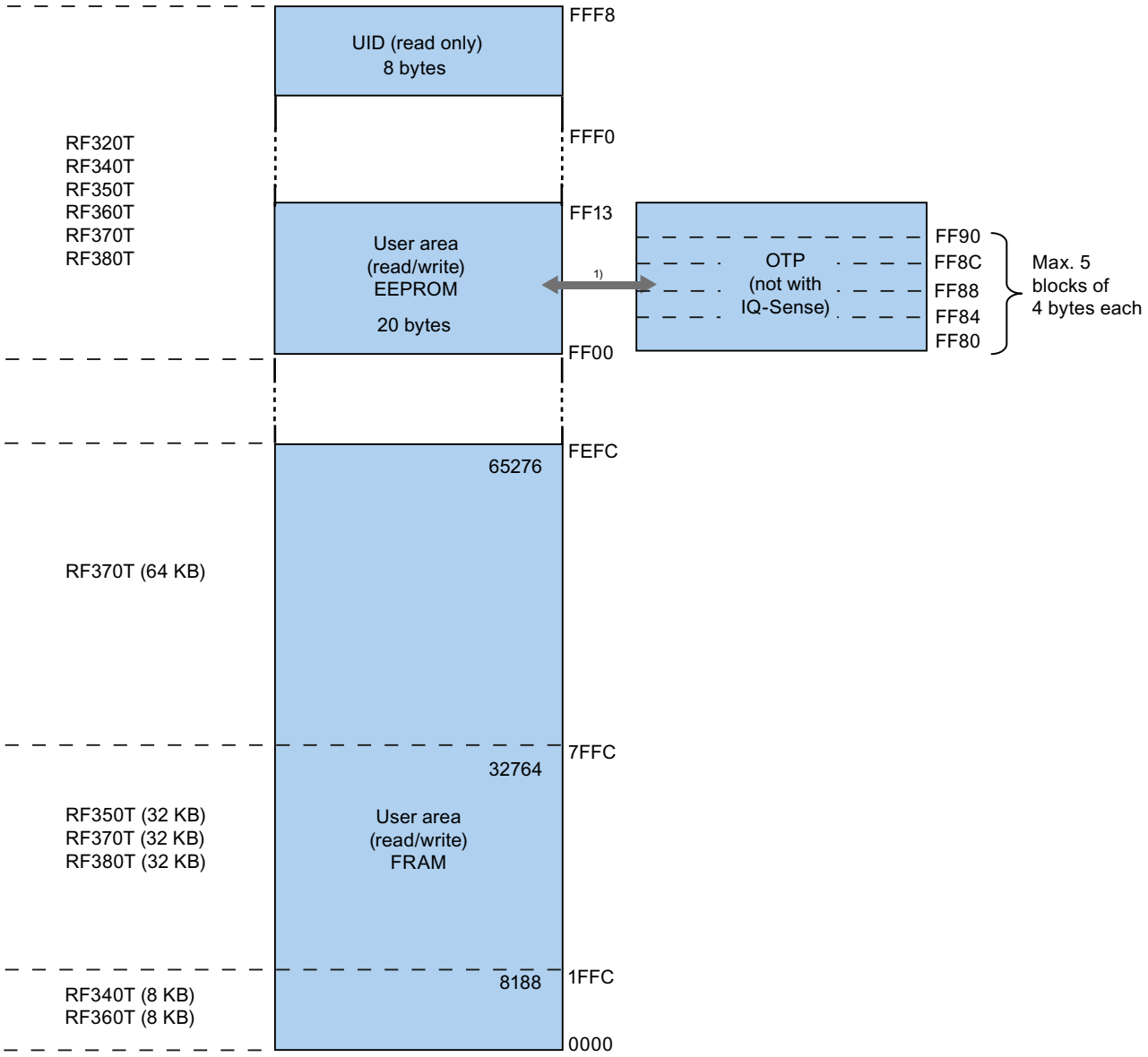

1) Physically identical memory When the OTP area is used, the corresponding user area (FF00-FF13) can no longer be modified (read only).

Figure 6-1 Memory configuration of the RF300 tags

EEPROM area

The memory configuration of an RF300 tag always comprises an EEPROM memory that has 20 bytes for user data (read/write) and a 4 byte unique serial number (UID, read only). For reasons of standardization, the UID is transferred as an 8 byte value through a read command to address FFF0 with a length of 8. The unused 4 high bytes are filled with zeros.

Note

The EEPROM user memory (address FF00-FF13, or FF80-FF90) requires significantly more time for writing (approx. 11 ms/byte) than the high-speed FRAM memory. For time-critical applications with a write function, it is therefore recommended that FRAM tags are used (e.g. RF340T, RF350T, RF360T, RF370T, RF380T).

FRAM area

Depending on the tag type, high-speed FRAM memory is available. (8 KB, 32 KB, 64 KB). This area does not exist for the RF320T.

OTP area

The EEPROM memory area (address FF00-FF13) can also be used as a so-called "OTP" memory (One Time Programmable). The 5 block addresses FF80, FF84, FF88, FF8C and FF90 are used for this purpose. A write command to this block address with a valid length (4, 8, 12, 16, 20 depending on the block address) protects the written data from subsequent overwriting.

Note

The OTP area cannot be used for the IQ-Sense reader variant.

Note

Seamless use of the OTP area

When the OTP area is used, it must be ensured that the blocks are used starting from Block 0 consecutively.

Examples:

3 blocks (with write command), Block 0, 1, 2 (FF80, length = 12): valid

2 blocks (consecutive), Block 0 (FF80, length =4), Block 1 (FF84, length = 4): valid

2 blocks (consecutive), Block 0 (FF80, length =4), Block 2 (FF88, length = 4): Invalid

1 Block, Block 4 (FF90, length = 4): Invalid

NOTICE
Use of the OTP area is not reversible. If you use the OPT area, you cannot undo it, because the OPT area can only be written to once.

6.3 SIMATIC RF320T

6.3.1 Features

RF320T	Characteristics	
	Field of application	Identification tasks on small assembly lines in harsh industrial environments
	Memory	Read-only area (4 bytes UID) User data area (20 bytes)
	Read/write range	See Section Field data of RF300 transponders (Page 44)
	Mounting on metal	Not possible: Recommended distance from metal ≥ 20 mm

6.3.2 Ordering data

Table 6- 1 Ordering data RF320T

RF320T	Order number
• Button • Memory size: 20 byte EEPROM • IP67 • Operating temperature: -25 °C to +85 °C • Dimensions: Ø = 27 mm x 4 mm	6GT2800-1CA00

6.3.3 Metal-free area

Mounting of RF320T on metal

Direct mounting of the RF320T on metal is not allowed.

The following figures show the minimum distance between the RF320T and metal:

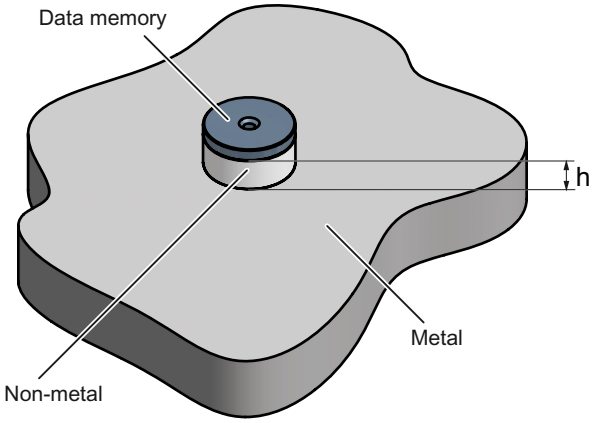

h > 20 mm

Figure 6-2 Mounting of an RF320T on metal with spacer

Flush-mounting of RF320T in metal

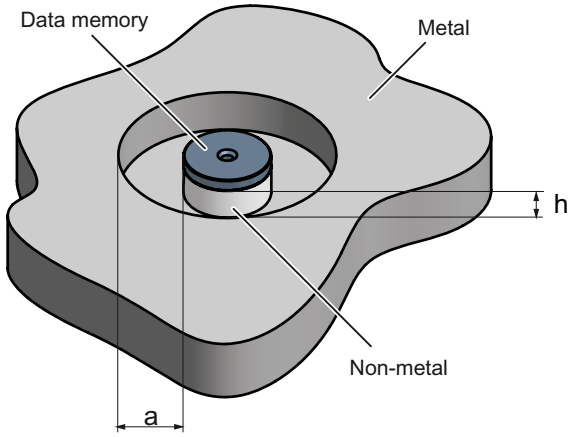

h > 20 mm

a > 20 mm

Figure 6-3 Flush-mounting of RF320T in metal with spacer

At lower values, the field data change significantly, resulting in a reduced range.

6.3.4 Technical data

Table 6- 2 Technical data for RF320T

Memory size	20 bytes EEPROM (r/w), 4 bytes UID (ro)
Memory organization	Byte-oriented access, write protection possible in 4-byte blocks
MTBF (Mean Time Between Failures) in years	1800
Read cycles	Unlimited
Write cycles, min.	50 000
at ≤ 40 °C, typical	> 100 000
Data retention time	> 10 years (at < +40 °C)
Read/write distance	Dependent on the reader used [see Chapter Field data of RF300 transponders (Page 44)]
Energy source	Inductive power transmission
Shock/vibration-resistant to EN 60721-3-7, Class 7 M3	100 g/20 g
Torsion and bending load	Not permissible
Fixing	Adhesive/M3 screws
Recommended spacing from metal	> 20 mm
Degree of protection to EN 60529	• IP67/IPX9K
Housing • Dimensions • Color/material	Button • Ø 27 mm x 4 mm • Black/epoxy resin
Ambient temperature • Operation • Transport and storage	 • -25 to +85 °C • -40 to +125 °C
Weight	Approx. 5 g

Note

All the technical data listed are typical data and are applicable for an ambient temperature between 0 and +50 °C and a metal-free environment.

6.3.5 Dimension drawing

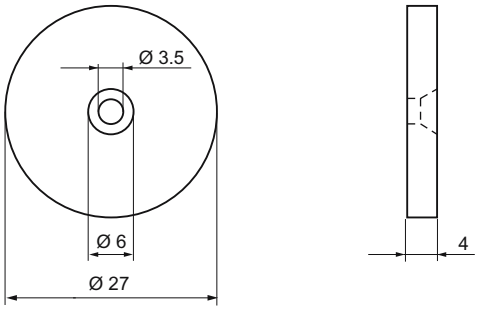

Figure 6-4 RF320T dimension drawing

Dimensions in mm

6.4 SIMATIC RF340T

6.4.1 Features

Table 6- 3

RF340T	Characteristics	
	Field of application	Identification tasks on small assembly lines in harsh industrial environments
	Memory	Read-only area (4 bytes UID) Read/write memory (8 KB) OTP [1] memory (20 bytes)
	Read/write range	See Section Field data of RF300 transponders (Page 44)
	Mounting on metal	Direct mounting on metal is possible.

[1] OTP: (One Time Programmable)

6.4.2 Ordering data

Table 6- 4 Ordering data RF340T

RF340T	Order number
• IP68 • Memory size: 8 KB FRAM • Operating temperature: -25 °C to +85 °C • Dimensions: 48 x 25 x 15 (L x W x H, in mm)	6GT2800-4BB00

6.4.3 Metal-free area

Direct mounting of the RF340T on metal is permitted.

Mounting of RF340T on metal

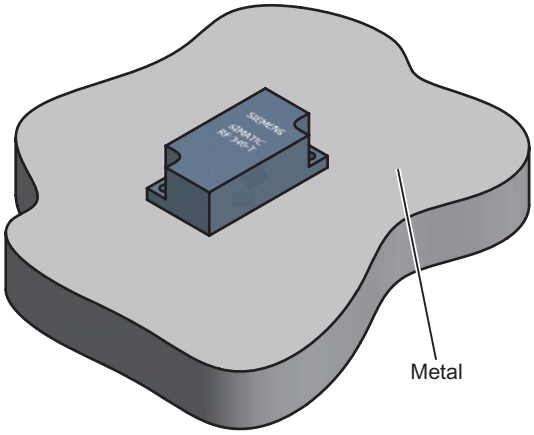

Figure 6-5 Mounting of RF340T on metal

Flush-mounting of RF340T in metal:

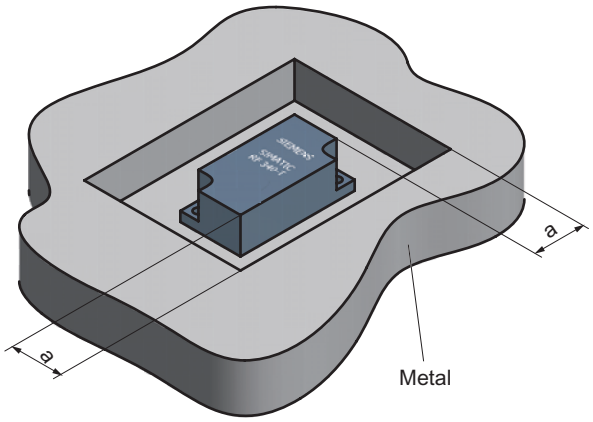

Figure 6-6 Flush-mounting of RF340T in metal

The standard value for a is ≥ 20 mm. At lower values, the field data change significantly, resulting in a reduction in the range.

6.4.4 Technical specifications

Table 6- 5 Technical specifications for RF340T

Memory size	8 KB	
Memory organization	Blocks of 8 bits/byte-by-byte	
Memory configuration • Serial number (UID) • Application memory • OPT memory	 • 4 bytes (fixed code) • 8189 bytes r/w • 20-byte OTP [1] memory	
Storage technology	FRAM / EEPROM	
MTBF (Mean Time Between Failures) in years	1200	
Write cycles, at +40 °C	Virtually unlimited (>10^{10})	
Read cycles	Virtually unlimited (>10^{10})	
Data transmission time • Read • Write	With RS422 reader: Approx. 0.13 ms/byte approx. 0.13 ms/byte	With IQ-Sense reader: Approx. 20 ms/byte approx. 25 ms/byte
Data retention	> 10 years	
Read/write distance	Dependent on the reader used [see Chapter Field data of RF300 transponders (Page 44)]	
Multitag capability	max. 4 transponders	
Recommended spacing from metal	can be directly mounted on metal	
Power supply	Inductive, without battery	
Degree of protection to EN 60529 Shock to EN 60721-3-7 Vibration to EN 60721-3-7 Torsion and bending load	IP68/IPX9K 50 g 20 g Not permitted permanently	
Enclosure dimensions Color Material Fixing	48 x 25 x 15 mm (L x W x H) Anthracite PA12 2 screws (M3)	
Ambient temperature • Operation • Storage and transport	 -25°C to +85°C -40°C to +85°C	
Weight	Approx. 25 g	

[1] OTP: One Time Programmable

6.4.5 Dimension drawing

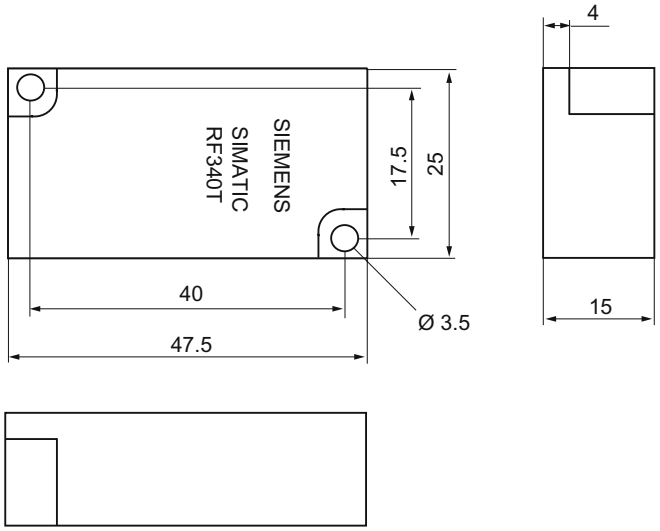

Figure 6-7 RF340T dimension drawing

Dimensions in mm

6.5 SIMATIC RF350T

6.5.1 Features

RF350T	Characteristics	
	Field of application	Identification tasks on small assembly lines in harsh industrial environments
	Memory	Read-only area (4 bytes UID) Read/write memory (32 KB) OTP [1] memory (20 bytes)
	Read/write range	See Section Field data of RF300 transponders (Page 44)
	Mounting on metal	Direct mounting on metal is possible.

[1] OTP: One Time Programmable

6.5.2 Ordering data

Table 6- 6 Ordering data RF350T

RF350T	Order number
• IP68 • Memory size: 32 KB FRAM (read/write) and 4 byte EEPROM (read only) • Operating temperature: -25 °C … +85 °C • Dimensions: 50 x 50 x 20 (L x W x H, in mm)	6GT2800-5BD00

6.5.3 Metal-free area

Direct mounting of the RF350T on metal is permitted.

Mounting of RF350T on metal

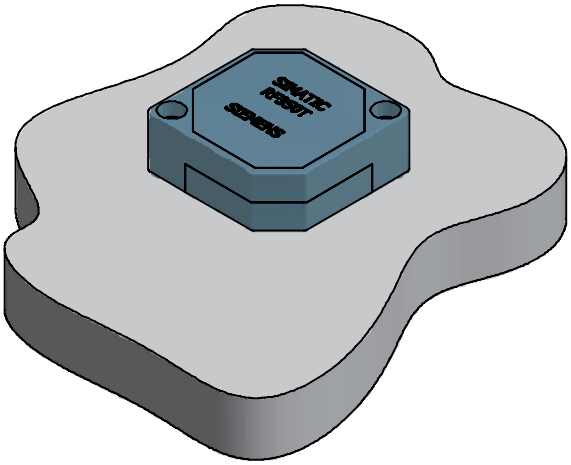

Figure 6-8 Mounting of RF350T on metal

Flush-mounting of RF350T in metal:

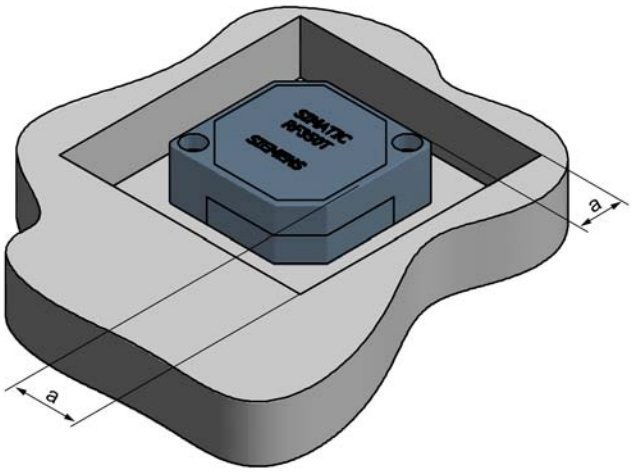

Figure 6-9 RF350T flush-mounted in metal

The standard value for a is ≥ 20 mm. At lower values, the field data change significantly, resulting in a reduction in the range.

6.5.4 Technical data

Table 6- 7 Technical specifications for RF350T

Memory size	32 KB	
Memory organization	Blocks of 8 bits/byte-by-byte	
Memory configuration • Serial number (UID) • Application memory • OTP [1] memory	 • 4 bytes (fixed code) • 32765 bytes r/w • 20 bytes	
Storage technology	FRAM / EEPROM	
MTBF (Mean Time Between Failures) in years	1200	
Write cycles, at +40 °C	Virtually unlimited (>10^{10})	
Read cycles	Virtually unlimited (>10^{10})	
Data transmission time • Read • Write	With RS422 reader: Approx. 0.13 ms/byte approx. 0.13 ms/byte	With IQ-Sense reader: Approx. 20 ms/byte approx. 25 ms/byte
Data retention	> 10 years	
Read/write distance	Dependent on the reader used [see Chapter Field data of RF300 transponders (Page 44)]	
Multitag capability	max. 4 transponders	
Recommended spacing from metal	can be directly mounted on metal	
Power supply	Inductive, without battery	
Degree of protection to EN 60529 Shock to EN 60721-3-7 Vibration to EN 60721-3-7 Torsion and bending load	IP68 50 g 20 g Not permitted permanently	
Enclosure dimensions Color Material Fixing	50 x 50 x 20 mm (L x W x H) Anthracite PA12 2 screws M4	
Ambient temperature • Operation • Transport and storage	 -25 °C to +85 °C -40 °C to +85 °C	
Weight	Approx. 25 g	

[1] OTP: One Time Programmable

6.5.5 Dimension drawing

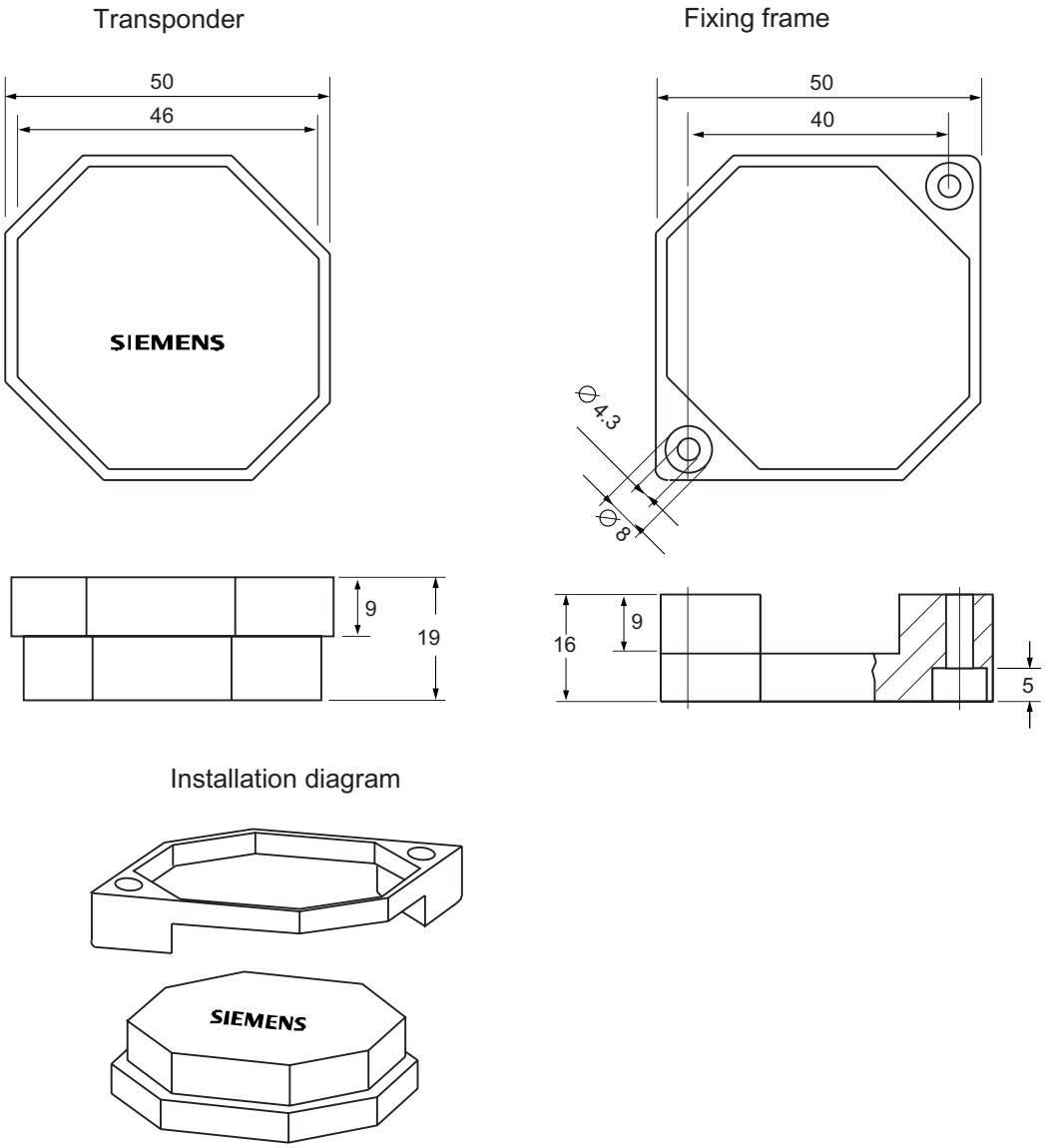

The transponder can be mounted as shown with the fixing frame.

Figure 6-10 RF350T dimension drawing

Dimensions in mm

6.6 SIMATIC RF360T

6.6.1 Features

RF360T	Characteristics	
	Field of application	Identification tasks on small assembly lines in harsh industrial environments
	Memory	Read-only area (4 bytes UID) Read/write memory (8 KB) OTP [1] memory (20 bytes)
	Read/write range	Refer to SectionField data of RF300 transponders (Page 44)
	Mounting on metal	Not possible; recommended distance from metal ≥ 20 mm

[1] OTP. One Time Programmable

6.6.2 Ordering data

Table 6- 8 Ordering data RF360T

RF360T	Order number
• IP67 • Memory size: 8 KB FRAM (read/write) and 4 byte EEPROM (read only) • Operating temperature: -25 °C … +75 °C • Dimensions: 85.8 x 54.8 x 2.5 (L x W x H, in mm)	6GT2800-4AC00

Table 6- 9 Ordering data for RF360T accessories

RF360T accessories	Order number
Spacers	6GT2190-0AA00
Fixing pocket	6GT2190-0AB00

6.6.3 Metal-free area

Direct mounting of the RF360T on metal is not allowed. A distance ≥ 20 mm is recommended. This can be achieved using the spacer 6GT2190-0AA00 in combination with the fixing pocket 6GT2190-0AB00.

Mounting of RF360T on metal

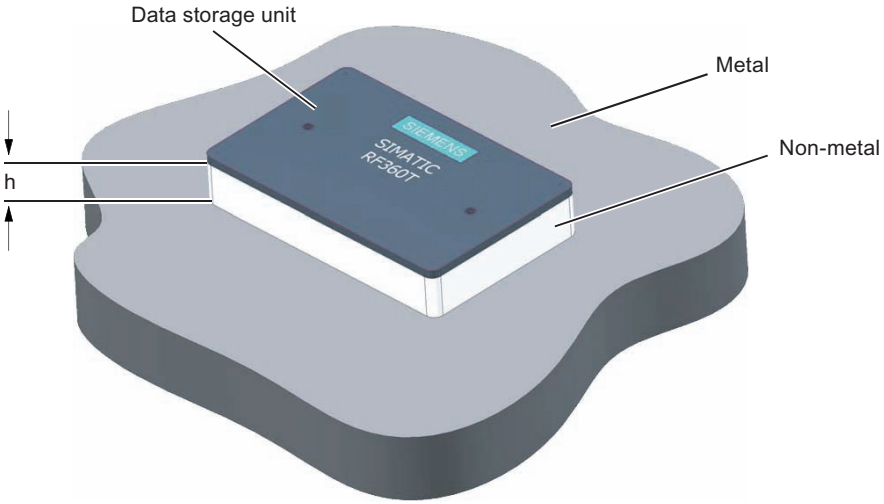

Figure 6-11 Mounting of RF360T with spacer

The standard value for h is ≥ 20 mm.

Flush-mounting of RF360T in metal:

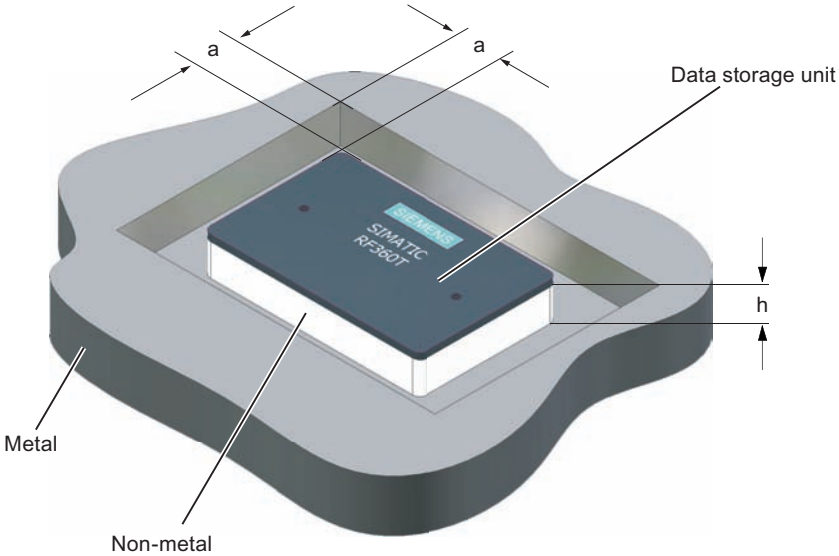

Figure 6-12 Flush-mounting of RF360T with spacer

The standard value for a is ≥ 20 mm. At lower values, the field data change significantly, resulting in a reduction in the range.

Dimensions of spacer and fixing pocket for RF360T

Dimension sketch

Spacer: 6GT2190-0AA00

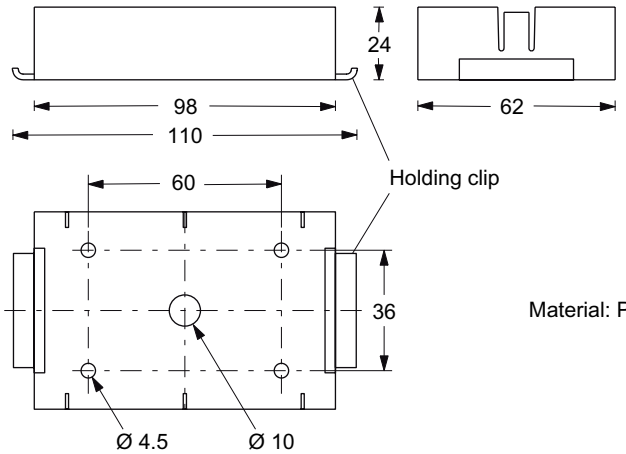

Fixing pocket: 6GT2190-0AB00

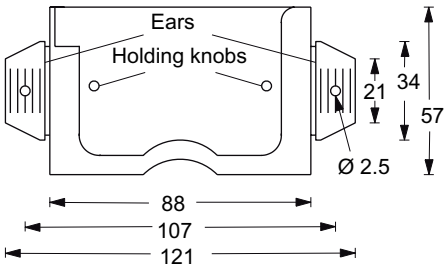

Material: PA 6

The spacer can be directly mounted on metal. In combination with the fixing pocket, a non-metal distance of 20 mm results between the transponder and metal.

Mounting:
- With 2 or 4 screws (M4)
- With rubbers on the holding clips (e.g. on mesh boxes)
- With cable ties on the holding clips (e.g. on mesh boxes)

Transponder with fixing pocket

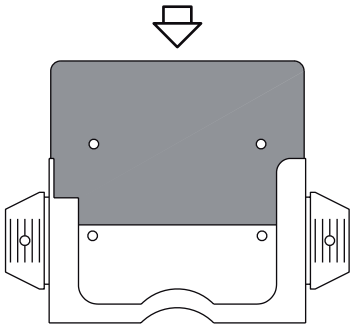

The transponder is inserted into the fixing pocket. Locking is via the holding knobs in the fixing pocket.

The fixing pocket is attached to a non-metal base by the ears. This can be achieved with:
- Screws in the holes provided
- Rivets in the holes provided
- Nails through the holes
- Tacks through the plastic of the ears
- Pushing into the spacers

The ears can be moved through up to 90°.

Transponder with fixing pocket and spacer (connected together)

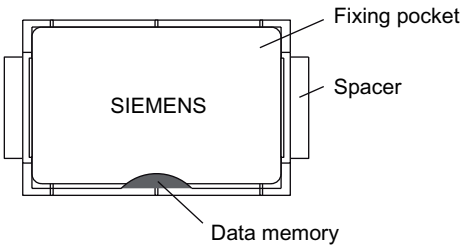

Re-assembly instructions:

The transponder is inserted into the fixing pocket. The ears are moved by 90° and inserted into the spacer. The fixing pocket must be aligned such that it covers the transponder (see Figure). Locking is automatic.

Figure 6-13 Dimensions of spacer and fixing pocket for RF360T

6.6.4 Technical data

Table 6- 10 Technical specifications for RF360T

Memory size	8 KB	
Memory organization	Blocks of 8 bits/byte-by-byte	
Memory configuration • Serial number (UID) • Application memory • OTP [1] memory	 • 4 bytes (fixed code) • 8189 bytes r/w • 20 bytes	
Storage technology	FRAM / EEPROM	
MTBF (Mean Time Between Failures) in years	1200	
Write cycles, at +40 °C	Virtually unlimited (>10^{10})	
Read cycles	Virtually unlimited (>10^{10})	
Data transmission time • Read • Write	With RS422 reader: Approx. 0.13 ms/byte approx. 0.13 ms/byte	With IQ-Sense reader: Approx. 20 ms/byte approx. 25 ms/byte
Data retention	> 10 years	
Read/write distance	Dependent on the reader used [see Chapter Field data of RF300 transponders (Page 44)]	
Multitag capability	max. 4 transponders	
Recommended spacing from metal	≥ 20 mm; e.g. using spacer 6GT2190-0AA00 in conjunction with fixing pocket 6GT2190-0AB00	
Power supply	Inductive, without battery	
Degree of protection to EN 60529 Shock to EN 60721-3-7 Vibration to EN 60721-3-7 Torsion and bending load	IP67 50 g 20 g Not permitted permanently	
Enclosure dimensions Color Material Fixing	85.8 x 54.8 x 2.5 mm (L x W x H) Anthracite Epoxy resin 2 screws (M3) or with fixing pocket 6GT2190-0AB00	
Ambient temperature • Operation • Transport and storage	 -25°C to +75°C -40°C to +85°C	
Weight	Approx. 25 g	

[1] OTP: One Time Programmable

6.6.5 Dimension drawing

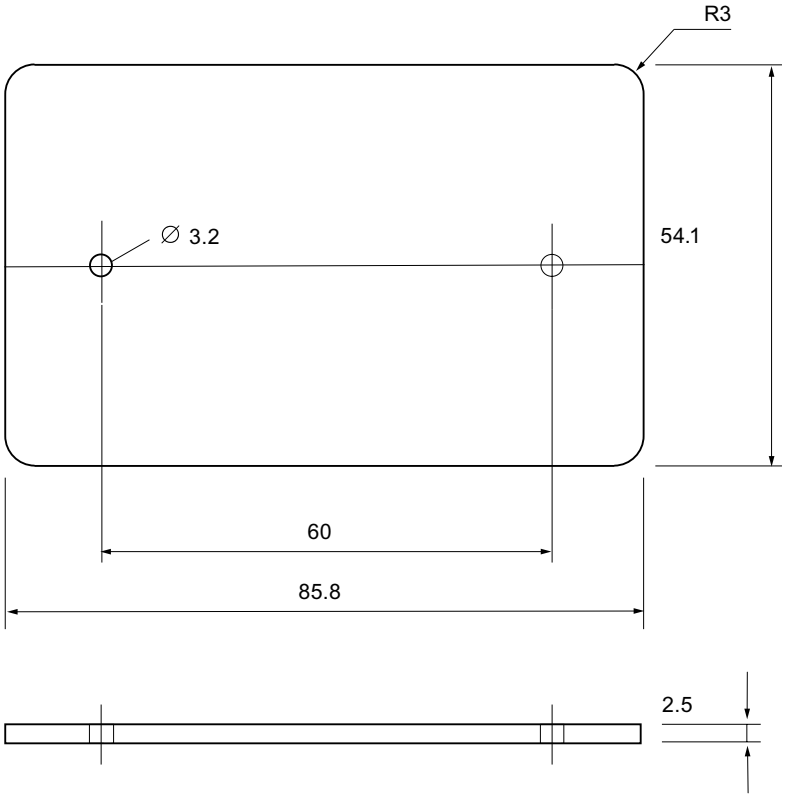

Figure 6-14 RF360T dimension drawing

Dimensions in mm

6.7 SIMATIC RF370T

6.7.1 Features

The SIMATIC RF370T transponder is a passive (i.e. battery-free) data carrier in a square type of construction.

RF370T	Characteristics	
	Field of application	Identification tasks on assembly lines in harsh industrial environments, suitable for larger ranges, e.g. automotive industry
	Memory	Read-only area: 4 byte UID read/write memory: 32/64 KB OTP [1] memory: 20 bytes
	Read/write range	Refer to SectionField data of RF300 transponders (Page 44)
	Assembly	Direct assembly on metal or flush-mounting is possible (with two M5 screws)
	Degree of protection	IP68 IPx9K
	High resistance	to mineral oils, lubricants and cleaning agents

[1] OTP: One Time Programmable

6.7.2 Ordering data

Table 6- 11 Ordering data RF370T

RF370T	Order number
• IP68 • Memory size: **32 KB FRAM** • Operating temperature: -25 to +85 °C • Dimensions: 75 x 75 x 40 (L x W x H, in mm)	6GT2800-5BE00
• IP68 • Memory size: **64 KB FRAM** • Operating temperature: -25 to +85 °C • Dimensions: 75 x 75 x 40 (L x W x H, in mm)	6GT2800-6BE00

6.7.3 Metal-free area

Direct mounting of the RF370T on metal is permitted.

Mounting of RF370T on metal

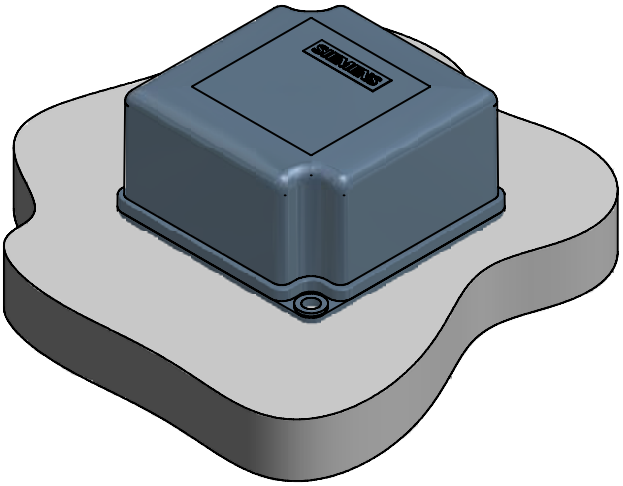

Figure 6-15 Mounting of RF370T on metal

Flush-mounting of RF370T in metal:

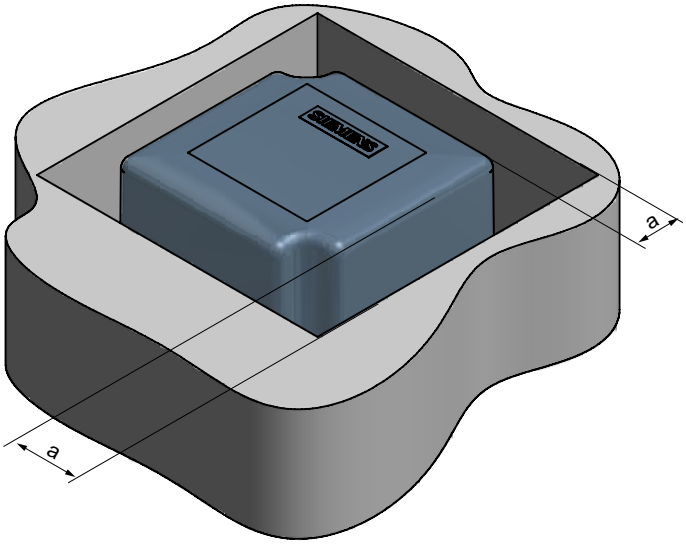

Figure 6-16 RF370T flush-mounted in metal

The standard value for a is ≥ 20 mm. At lower values, the field data change significantly, resulting in a reduction in the range.

6.7.4 Mounting instructions

It is essential that you observe the instructions in the Section Installation guidelines (Page 61).

Properties	Description
Type of installation	Screw fixing (two M5 screws)
Tightening torque	< 1.2 Nm (at room temperature)

6.7.5 Technical data for RF370T with 32 KB FRAM

Table 6- 12 Technical specifications for RF370T with 32 KB FRAM/64 KB FRAM

Memory size	32 KB/64 KB	
Memory organization	Blocks of 8 bits/byte-by-byte	
Memory configuration	Serial number	4 bytes (fixed code)
	Application memory	32765 bytes r/w (32 KB) 65276 bytes r/w (64 KB)
	OTP [1] memory	20 bytes
Storage technology	FRAM / EEPROM	
MTBF (Mean Time Between Failures) in years	1200	
Write cycles, at +40 °C	Virtually unlimited (>10^{10})	
Read cycles	Virtually unlimited (>10^{10})	
Data transmission time	Read	Approx. 0.13 ms/byte
	Write	Approx. 0.13 ms/byte
Data retention in years	> 10	
Read/write distance	Dependent on the reader used [see Chapter Field data of RF300 transponders (Page 44)]	
Multitag capability	max. 4 transponders	
Recommended spacing from metal	can be directly mounted on metal	
Power supply	Inductive, without battery	
Degree of protection to EN 60529	IPx9K	
Shock resistant to EN 60721-3-7	50 g	
Vibration resistant to EN 60721-3-7	20 g	
Torsion and bending load	Not permissible continuously	
Enclosure dimensions	75 x 75 x 40 mm (L x W x H)	
Color	Anthracite	
Material	PA12	
Fixing	Two M5 screws	
Ambient temperature	Operation	-25 °C to +85 °C
	Transport and storage	-40°C to +85°C
Weight	Approx. 200 g	

[1] OTP: One Time Programmable; single write

6.7.6 Dimensional drawing

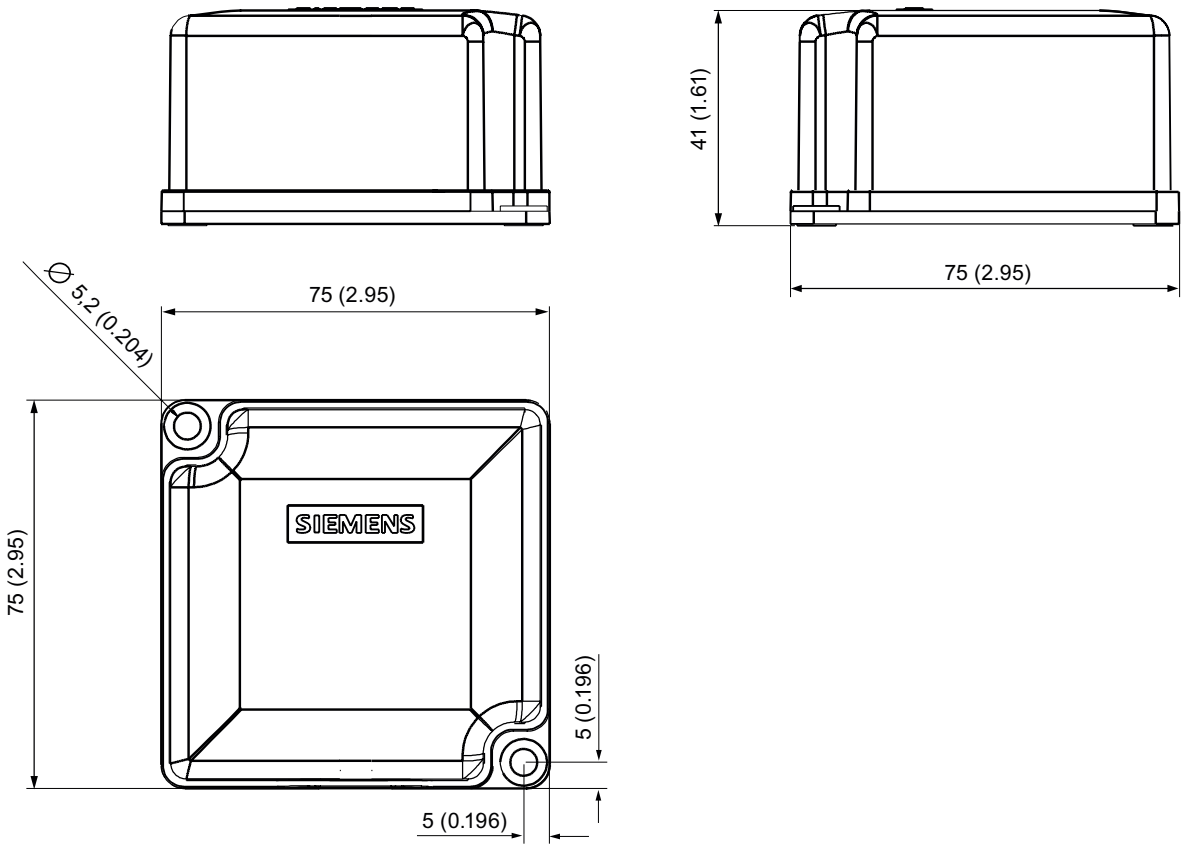

Figure 6-17 RF370T dimension drawing

Dimensions in mm (inches in brackets)

6.8 SIMATIC RF380T

6.8.1 Features

The SIMATIC RF380T transponder is an extremely rugged and heat-resistant round data carrier suitable e.g. for applications in the automotive industry.

SIMATIC RF380T transponder	Characteristics	
	Field of application	Identification tasks in applications (e.g. automotive industry) with cyclic **high temperature stress** > 85 °C and < 220 °C Typical applications: • Primer coat, electrolytic dip area, cataphoresis with the associated drying furnaces • Top coat area with drying furnaces • Washing areas at temperatures > 85°C • Other applications with higher temperatures
	Memory	• Read-only area (4 bytes UID) • Read/write memory (32 KB) • OTP [1] memory (20 bytes)
	Read/write range	Refer to SectionField data of RF300 transponders (Page 44)
	Assembly	• Direct assembly on metal or flush-mounting is possible. • The transponder can be secured using a special holder (see installation guidelines, section on RF380T). The tag size is designed such that it can be secured on a skid or also directly on a body.
	Degree of protection	IP 68
	High resistance	to mineral oils, lubricants and cleaning agents

[1] OTP: One Time Programmable

6.8.2 Ordering data

RF380T	Order number
• IP68 • Memory size 32 KB FRAM (read/write) and 4 byte EEPROM • Operating temperature -25 … +200 °C (cyclic) • Dimensions: 114 x 83 (ØxH in mm)	6GT2800-5DA00

Accessories for RF380T	Order number
Holder (short version)	6GT2090-0QA00
Holder (long version)	6GT2090-0QA00-0AX3
Covering hood	6GT2090-0QB00
Universal holder	6GT2590-0QA00

6.8.3 Installation guidelines for RF380T

It is essential that you observe the instructions in the Section Installation guidelines (Page 61).

The following section only deals with features specific to the SIMATIC RF380T.

6.8.3.1 Mounting instructions

NOTICE
Only use tag with original holder You are strongly recommended to only use the tag with the original holder specified. Only this holder guarantees that the data memory observes the listed values for shock, vibration and temperature. A protective cover is recommendable for applications in paint shops.

Data memory holder

Short version (6GT2 090-0QA00)	Long version (6GT2090-0QA00-0AX3)
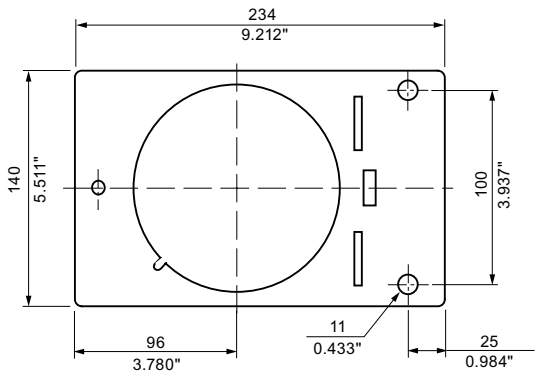	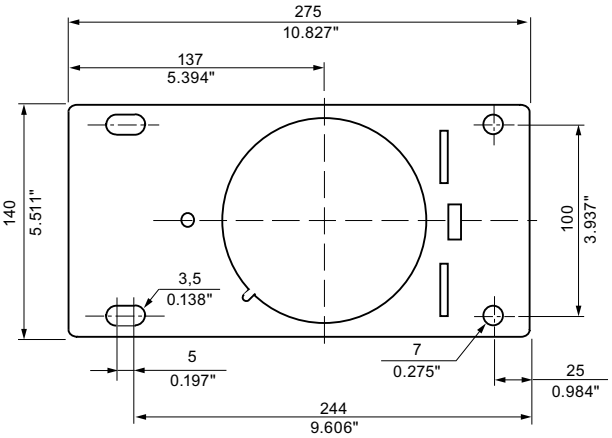
Material: V2A sheet-steel with thickness 2.5 mm BI 2.5 DIN 59382 1.4541	

Assembly of data memory with holder

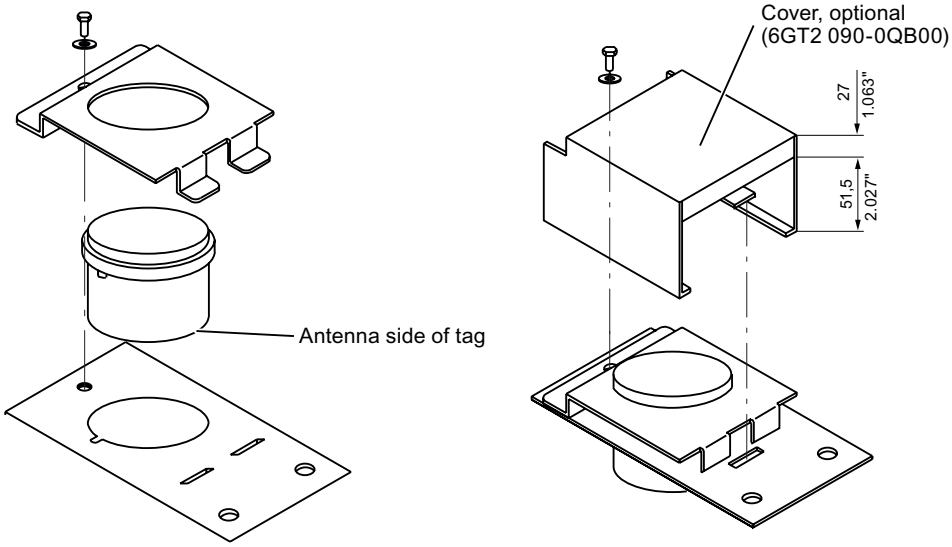

Figure 6-18 Assembly of tag with holder

Scope of supply

The holder is provided with all mounting parts and a mounting diagram. Mounting screws for securing the holder are not included. The mounting screws are of diameter M 10. The minimum length is 25 mm. The optional cover can be used for the long and short versions of the holder.

Universal holder

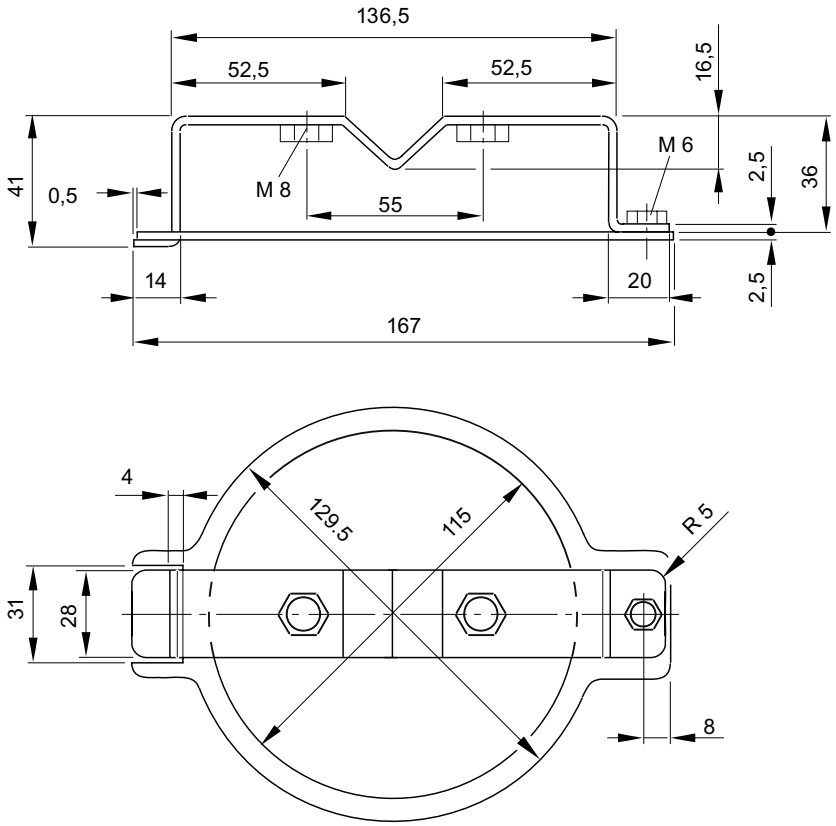

Figure 6-19 Universal holder 6GT2590-0QA00

6.8.3.2 Metal-free area

Direct mounting of the RF380T on metal is permitted.

Mounting of RF380T on metal

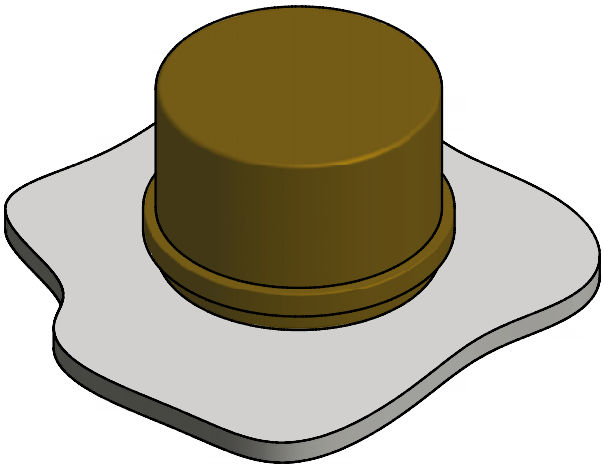

Figure 6-20 Mounting of RF380T on metal

Flush-mounting of RF380T in metal:

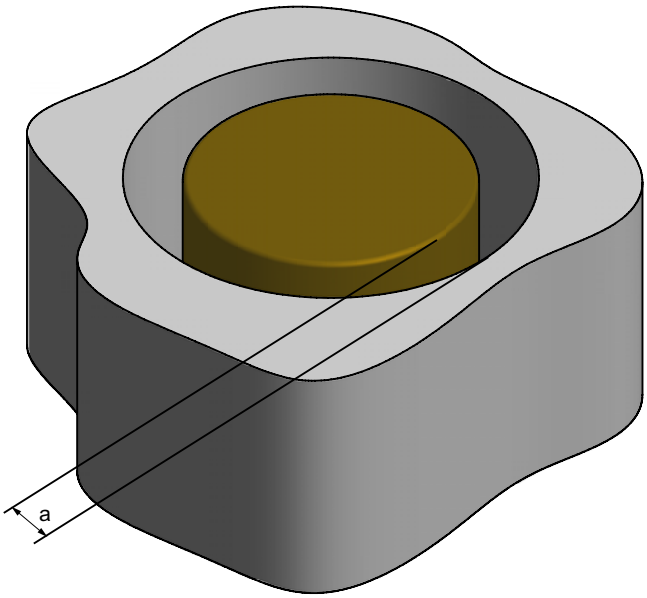

Figure 6-21 RF380T flush-mounted in metal

The standard value for a is ≥ 40 mm. At lower values, the field data change significantly, resulting in a reduction in the range.

6.8.4 Configuring instructions

6.8.4.1 Temperature dependence of the transmission window

The guidelines in Section "Planning the RF300 system" apply to configuration of heat-resistant data memories, with the exception of the limit distance and field length at temperatures above 85 °C.

Calculation of transmission window with heat-resistant data memories

The factor 0.8 is required for calculating the transmission window, and takes into account production tolerances and temperature influences of to 85 °C.

An additional correction factor C must be included in the calculation at temperatures > 85 °C (up to 110 °C):

$$t_{v[T<85\,°C]} = \frac{L \cdot 0,8}{V_{MDS}}$$

$$S_{g[T>85\,°C]} = S_g \cdot C \qquad L_{[T>85\,°C]} = L \cdot C$$

$$t_{v[T>85\,°C]} = \frac{L \cdot C \cdot 0,8}{V_{MDS}} \frac{[m]}{[m/s]}$$

L	Field length
S_g	Limit distance tag - reader
V_{Tag}	Tag speed
C	Correction factor at temperatures > 85 °C (cf. following picture with correction factor C depending on temperature)
t_v	Tag dwell time

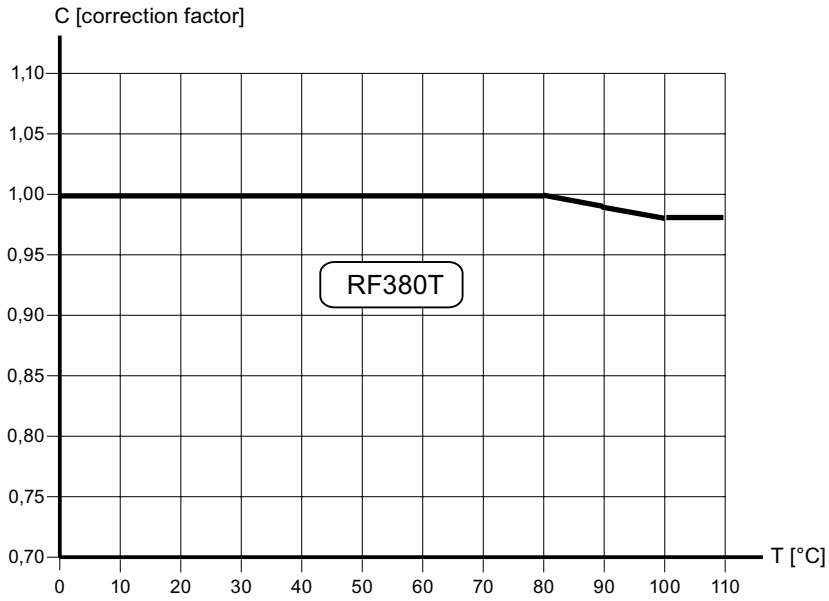

Figure 6-22 Correction factor C depending on temperature

The following diagram shows the reduction in the limit distance and field length at increased processing temperatures (internal temperature of tag):

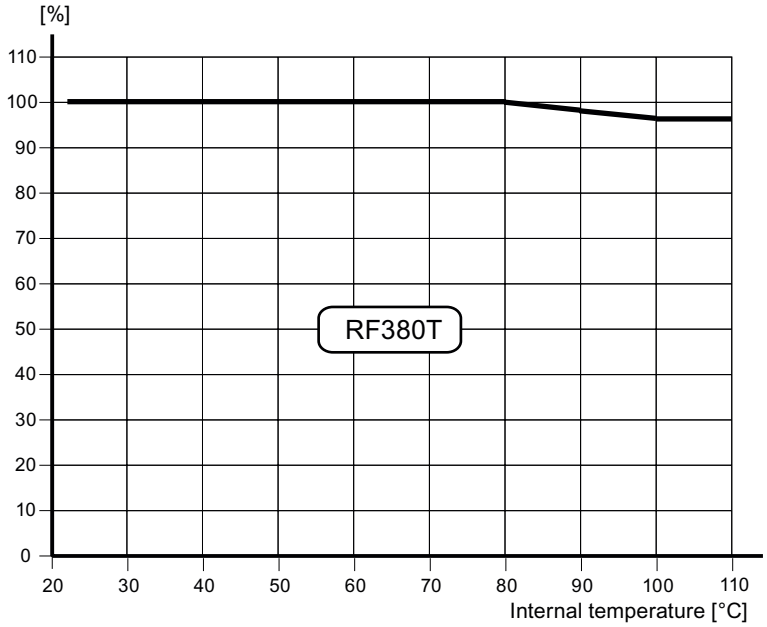

Figure 6-23 Reduction in field length and limit distance

The reduction in the field data at higher temperatures is due to the increased current consumption of the electronics.

6.8.4.2 Temperature response in cyclic operation

At ambient temperatures (T_u) up to 110 °C, cyclic operation is not necessary, i.e. up to this temperature, the transponder can be in constant operation.

Note

Calculation of the temperature curves

Calculation of the temperature curves or of a temperature profile can be carried out on request by Siemens AG. Exact knowledge of the internal temperature facilitates configuration for time-critical applications.

You can also carry out the calculation with the aid of the "SIMATIC RF Temperature Calculator" on the "RFID Systems Software & Documentation" CD [see Accessories (Page 246)].

Ambient temperatures > 110 °C

NOTICE

Cancellation of warranty

The internal temperature of the data memory must not exceed the critical threshold of 110 °C. Each heating phase must be followed by a cooling phase. No warranty claims will otherwise be accepted.

Some limit cycles are listed in the table below:

Table 6- 13 Limit cycles of data memory temperature

T_u (heating up)	Heating up	T_u (cooling down)	Cooling down
220 °C	0.5 h	25 °C	> 2 h
200 °C	1 h	25 °C	> 2 h
190 °C	1 h	25 °C	> 1 h 45 min
180 °C	2 h	25 °C	> 5 h
170 °C	2 h	25 °C	> 4 h

The internal temperature of the tag follows an exponential function with which the internal temperature and the operability of the tag can be calculated in advance. This is particularly relevant to temperature-critical applications or those with a complex temperature profile.

Ambient temperatures > 220°C

NOTICE
Cancellation of warranty The data memory must not be exposed to ambient temperatures > 220 °C. No warranty claims will otherwise be accepted. However, the mechanical stability is retained up to 230 °C!

Example of a cyclic sequence

Table 6- 14 Typical temperature profile of an application in the paint shop

Start of tag at initial point	Duration (min)	Ambient temperature (°C)
Electrolytic dip	20	30
Electrolytic dip dryer	60	200
Transport	60	25
PVC dryer	25	170
Transport	60	25
Filler dryer	60	160
Transport	60	25
Top coat dryer	60	120
Transport	60	25
Wax dryer	25	100
Transport	150	25

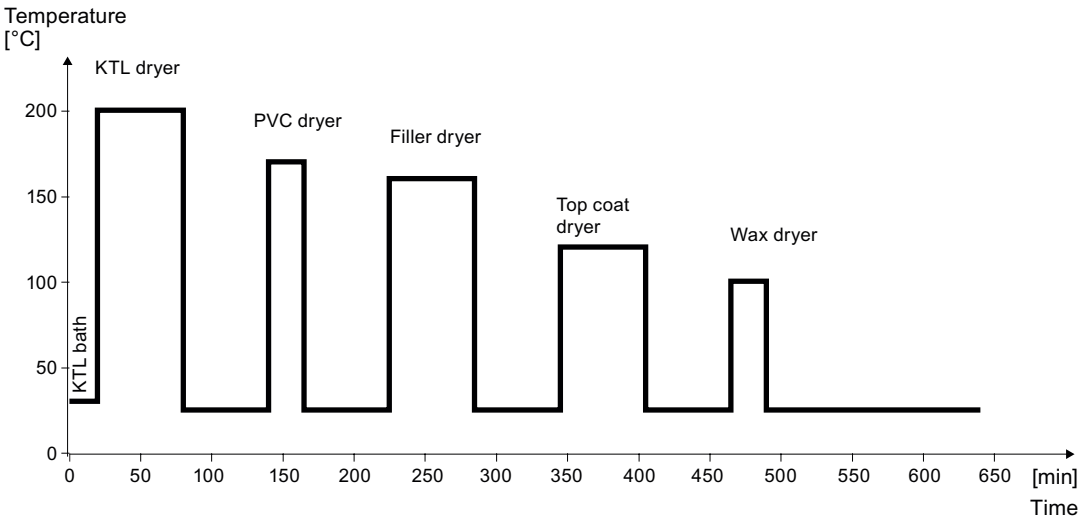

Figure 6-24 Graphic trend of temperature profile from above table

The simulation results in the following:

Following a simulation time of 36.5 hours, a total of 3 cycles were carried out, and an internal temperature of 90 degrees Celsius was reached.

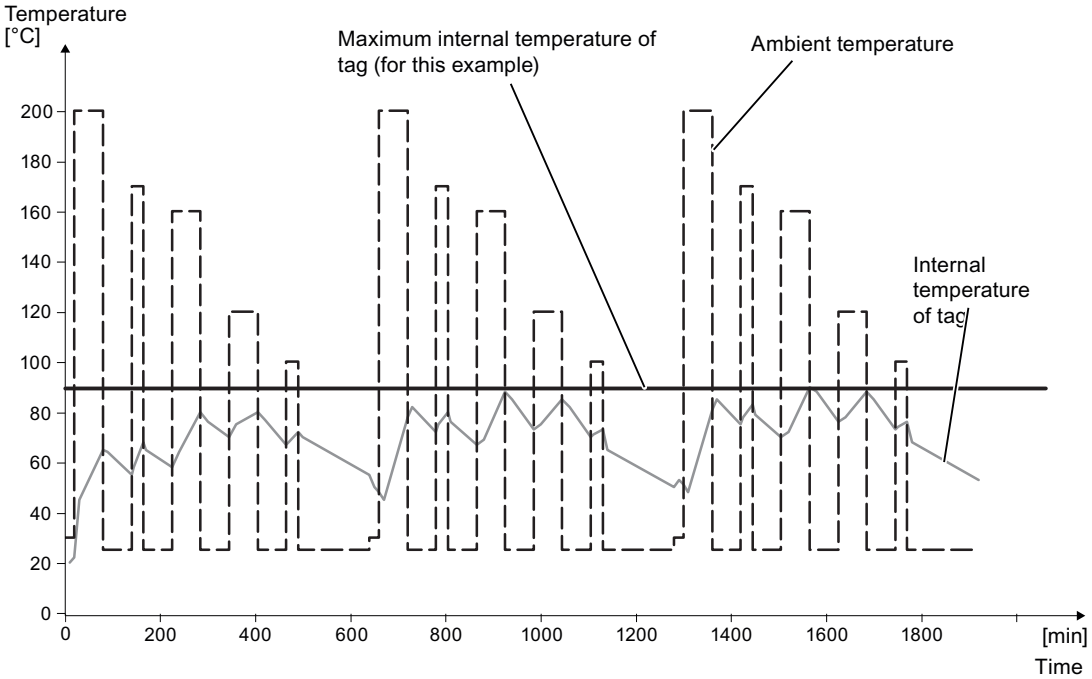

Figure 6-25 Complete temperature response due to simulation

6.8.5 Technical specifications

Table 6- 15 RF380T with 32 KB FRAM

Memory size	32KB	
Memory organization	Blocks of 8 bits/byte-by-byte	
Memory configuration	Serial number	4 bytes (fixed code)
	Application memory	32765 bytes r/w
	OTP [1] memory	20 bytes
Storage technology	FRAM / EEPROM	
MTBF (Mean Time Between Failures) in years	1177	
Write cycles, at +40 °C	Virtually unlimited (>10^{10})	
Read cycles	Virtually unlimited (>10^{10})	
Data transmission time	Read	Approx. 0.13 ms/byte
	Write	Approx. 0.13 ms/byte
Data retention	> 10 years	
Read/write distance	Dependent on the reader used [see Chapter Field data of RF300 transponders (Page 44)]	
Multitag capability	max. 4 transponders	
Recommended spacing from metal	can be directly mounted on metal	
Power supply	Inductive, without battery	
Degree of protection to EN 60529	IP68	
Shock resistant[2] to EN 60721-3-7	50 g	
Vibration[2] to EN 60721-3-7	5 g	
Direction-dependent	No	
Torsion and bending load	Not permissible continuously	
Enclosure dimensions	(diam. x H in mm) 114 x 83	
Color	Brown	
Material	PPS	
Fixing	Holder to be ordered separately	
Ambient temperature	During operation, continuously	-25 °C to +110°C
	During cyclic operation	-25 °C to +220°C
	Transport and storage	-40°C to +110°C
Weight	Approx. 900 g	

[1] OTP: One Time Programmable

[2] Applies only in connection with original bracket

6.8.6 Dimensional drawing

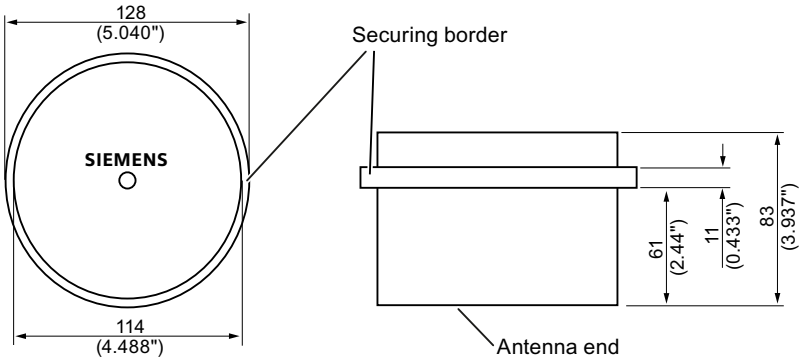

Figure 6-26 Dimension drawing RF380T

Dimensions in mm (inches in brackets)

ISO transponder

7

ISO 15693-compatible transponders, such as the MDS Dxxx from the MOBY D range of products, represent a cost-effective alternative to RF300 tags. The performance that can be achieved with this (data rate, memory size), however, is considerably less than with RF300 tags (see Chapter Communication between communication module, reader and transponder (Page 40)).

Operating with the following ISO tags from MOBY D is described in this manual:

- MDS D100
- MDS D124
- MDS D139
- MDS D160
- MDS D324

Compatible RF300 readers

ISO tags can currently only be read using the following readers

- SIMATIC RF310R (RS422) [6GT2801-1AB10]
- SIMATIC RF380R [6GT2801-3AB10]

7.1 Memory configuration of the ISO tags

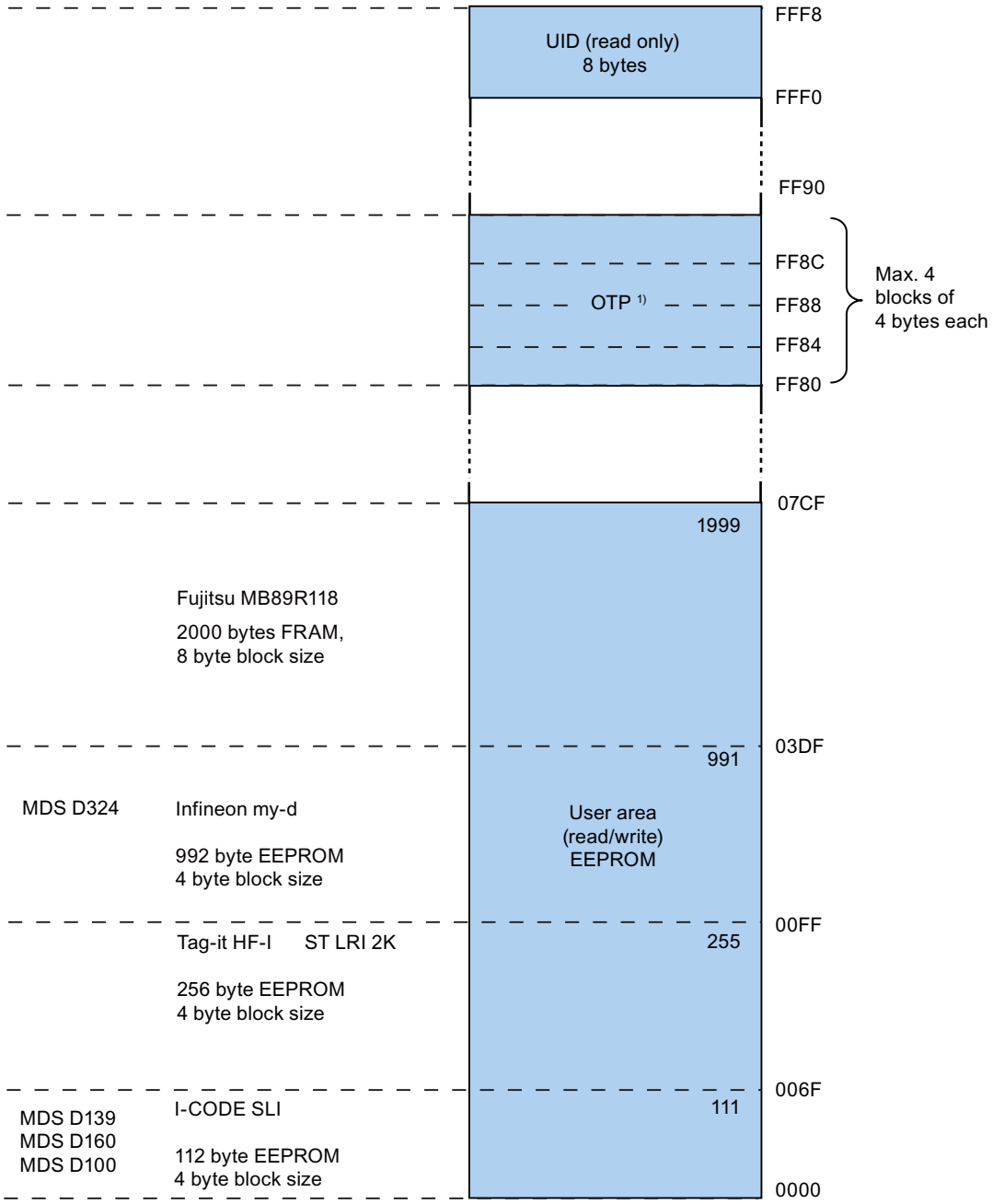

1) If the OTP area is used, there will be a correspondingly lower amount of user memory available, because the OTP area always occupies the uppermost 16 bytes of the user memory.

Figure 7-1 Memory configuration of ISO tags

Memory areas

Depending on the manufacturer of the transponder chip, the memory configuration of an ISO tag consists of EEPROM memory of varying sizes. Except for transponders that are equipped with a Fuijtsu 2k FRAM, these are equipped with only one FRAM.

The typical sizes are 112 bytes, 256 bytes, 992 bytes or 2000 bytes. Each ISO transponder chip features an 8-byte unique serial number (UID, read only). This UID is transferred as an 8 byte value through a read command to address FFF0 with a length of 8.

OTP area

For the OTP area, a 16-byte address space is always reserved at the end of the memory area. The blocks are divided up depending on the chip (see technical specifications). For the user, this means that the corresponding addresses for the user data are not available to the application when the OTP area is used.

A total of 4 block addresses ("mapped" addresses) are provided:

- FF80
- FF84
- FF88
- FF8C

A write command to this block address with a valid length (4, 8, 12, 16 depending on the block address) protects the written data from subsequent overwriting.

Note

Exception - Fujitsu chip

This chip only has 8-byte blocks, which means that only 2 block addresses have to be addressed: FF80 and FF88 (lengths 8 and 16).

NOTICE
OTP writing/locking should only be used in static operation.

NOTICE
Use of the OTP area is not reversible. If you use the OPT area, you cannot undo it, because the OPT area can only be written to once.

7.2 MDS D100

7.2.1 Characteristics

The MDS D100 mobile data memory is a passive, maintenance-free transponder based on the ISO 15693 standard with I-Code technology.

MDS D100	Characteristics	
	Field of application	From simple identification such as electronic barcode replacement/supplementation, through warehouse and distribution logistics, right up to product identification.
	Memory	EEPROM 128 bytes gross 112 bytes net capacity
	Read/write range	See Chapter Field data of ISO transponders (Page 47).
	Mounting on metal	Not possible; recommended distance from metal ≥ 20 mm
	ISO standard	15693 with I-code technology

7.2.2 Ordering data

Table 7- 1 Ordering data for MDS D100

MDS D100	Order number
• IP68 • Memory size: 112 byte EEPROM • Operating temperature: -25 … +80 °C • Dimensions: 85.6 x 54 x 0.9 (L x W x H, in mm) • ISO card	6GT2600-0AD10

Table 7- 2 Ordering data for MDS D100 accessory

MDS D100 accessory	Order number
Spacers	6GT2190-0AA00
Fixing pocket	6GT2190-0AB00
Fixing pocket (cannot be mounted directly on metal)	6GT2390-0AA00

7.2.3 Metal-free area

Direct mounting of the MDS D100 on metal is not allowed. A distance of ≥ 20 mm is recommended. This can be achieved using the spacer 6GT2190-0AA00 in combination with the fixing pocket 6GT2190-0AB00.

Mounting on metal

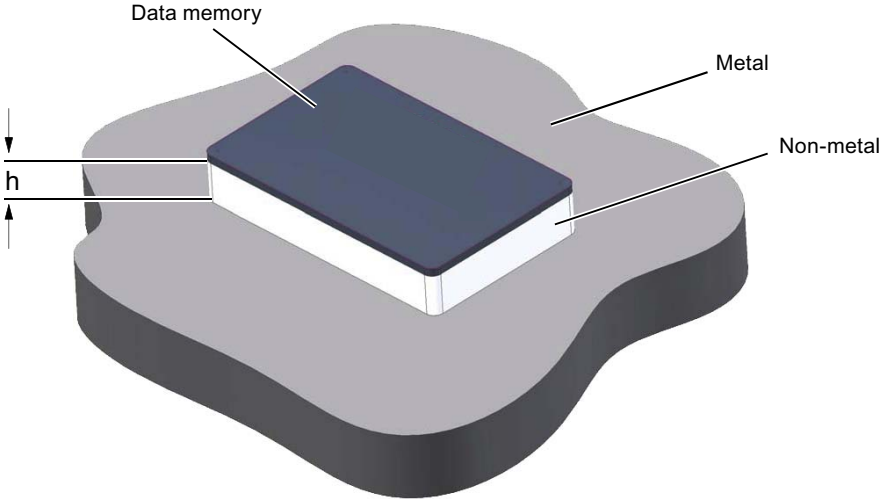

h ≥ 20 mm

Figure 7-2 Mounting of the MDS D100 on metal with spacer

Flush-mounting

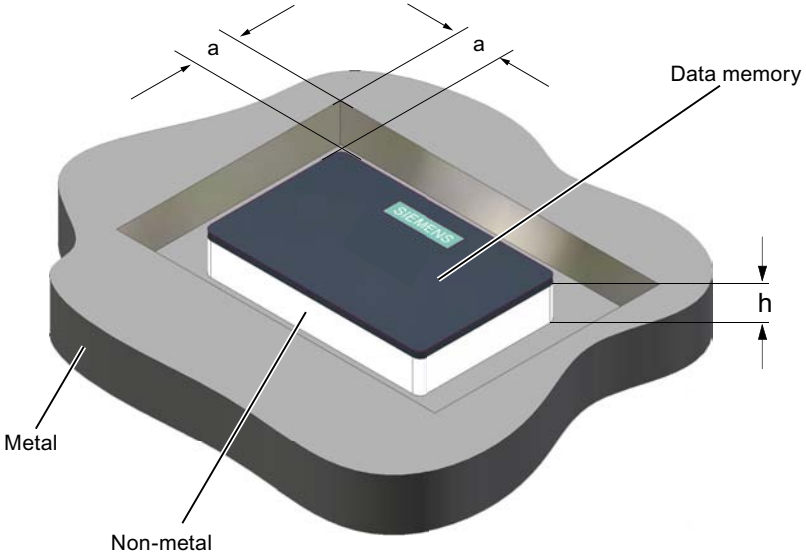

h ≥ 20 mm

a ≥ 20 mm

Figure 7-3 Flush-mounting of MDS D100 in metal with spacer

Note

If the minimum guide values (h) are not observed, a reduction of the field data results.

Fixing pocket for MDS D100

The fixing pocket is secured on a non-metallic surface with M4 countersunk head screws in the holes provided.

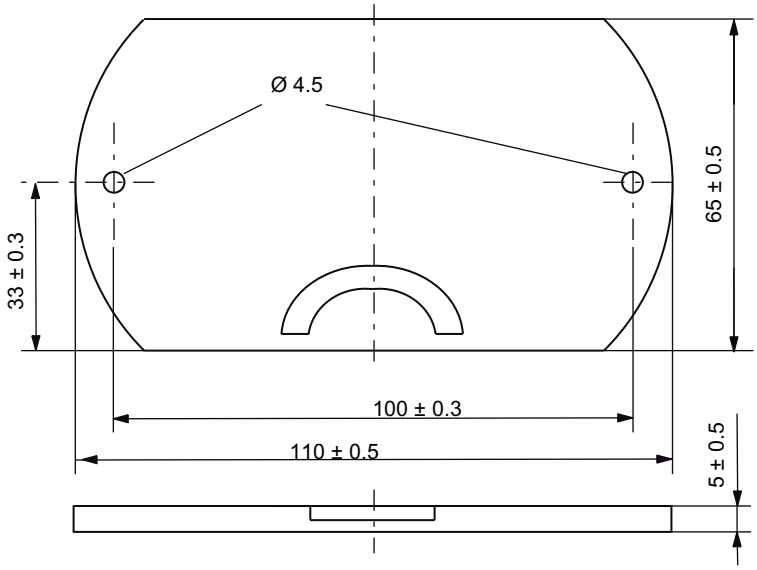

Figure 7-4 Fixing pocket 6GT2390-0AA00 for MDS D100

Note

The fixing pocket shown here with Order No.: 6GT2 390-0AA00 is not suitable for use with the spacer (6GT2 190-0AA00).

Note

When mounting the MDS D100 on metal, it is also possible to use the 6GT2 190-0AB00 fixing pocket, but only in combination with the 6GT2 190-0AA00 spacer.

Fixing pocket with spacer for MDS D100

Dimension sketch

Spacer: 6GT2190-0AA00

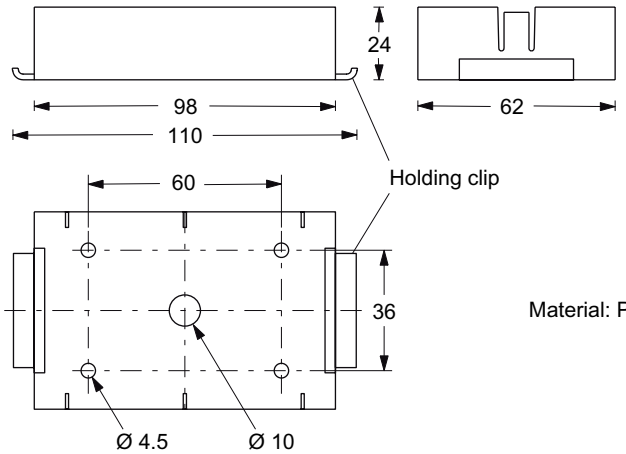

Fixing pocket: 6GT2190-0AB00

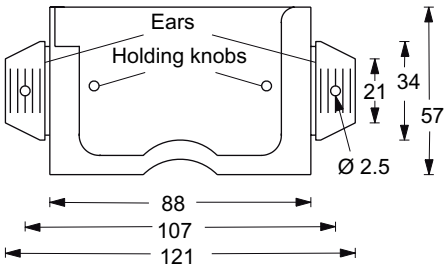

Material: PA 6

The spacer can be directly mounted on metal. In combination with the fixing pocket, a non-metal distance of 20 mm results between the transponder and metal.

Mounting:
- With 2 or 4 screws (M4)
- With rubbers on the holding clips (e.g. on mesh boxes)
- With cable ties on the holding clips (e.g. on mesh boxes)

Transponder with fixing pocket

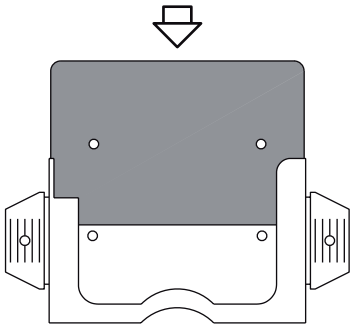

The transponder is inserted into the fixing pocket. Locking is via the holding knobs in the fixing pocket.

The fixing pocket is attached to a non-metal base by the ears. This can be achieved with:
- Screws in the holes provided
- Rivets in the holes provided
- Nails through the holes
- Tacks through the plastic of the ears
- Pushing into the spacers

The ears can be moved through up to 90°.

Transponder with fixing pocket and spacer (connected together)

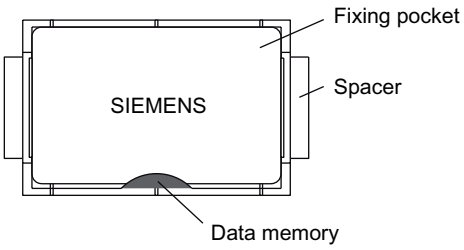

Re-assembly instructions:

The transponder is inserted into the fixing pocket. The ears are moved by 90° and inserted into the spacer. The fixing pocket must be aligned such that it covers the transponder (see Figure). Locking is automatic.

Figure 7-5 Dimensions of the spacer and fixing pocket 6GT2190-0AB00 for MDS 100

7.2.4 Technical data

Table 7- 3 Technical data for MDS D100

Memory size	128 bytes
Memory configuration • Serial number • Configuration memory [1)] • AFI/DSFID [1)] • Application memory	 • 8 bytes (fixed code) • 6 bytes • 2 bytes • 112 bytes
Storage technology	EEPROM
Memory organization	EEPROM 128 bytes gross 112 bytes net capacity When using the OPT area, 16 bytes of it must be subtracted in 4 byte blocks
Protocol	according to ISO 15693
Data retention (at +40 °C)	10 years
MTBF (at +40 °C)	2 x 10^6 hours
Read cycles	Unlimited
Write cycles, typical	200 000
Write cycles, min.	100 000
Read/write distance (S_g)	See Chapter Field data of ISO transponders (Page 47).
Distance from metal	min. 20 mm (approx. 30% reduction of the field data)
Multitag capability	Yes
Power supply	Inductive power transmission (without battery)
Degree of protection to EN 60529	IP68
Vibration	ISO 10373/ISO 7810
Torsion and bending load	ISO 10373/ISO 7816-1
Mechanical design • Color • Material • Dimensions (L x W x H) in mm	Laminated plastic card, printable on both sides • White/petrol • PC • 85.6 x 54 x 0.9
Fixing	Adhesive, fixing pocket
Ambient temperature • Operation • Transport and storage	 • -25 °C to +80 °C • -25 °C to +80 °C
Weight, approx.	5 g

[1)] Configuration memory and AFI/DSFID are used/not used by RF300.

7.2.5 Dimension drawing

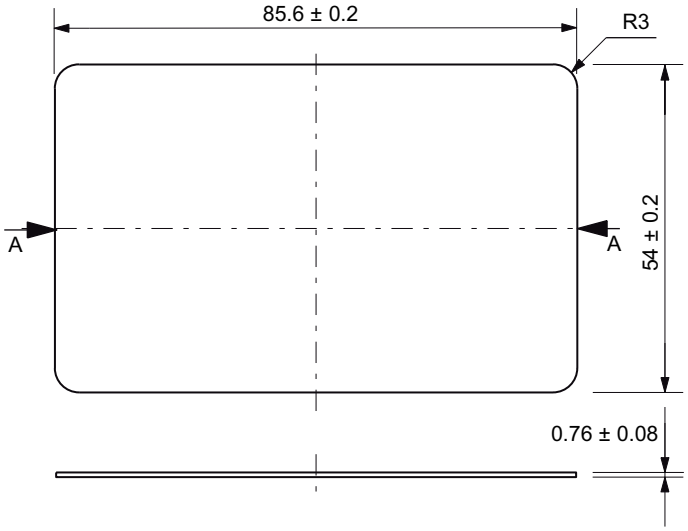

Dimensions in mm

Figure 7-6 MDS D100 dimension drawing

7.3 MDS D124

7.3.1 Characteristics

The MDS D124 is a passive, maintenance-free transponder based on the ISO 15693 standard with I-Code technology.

This mobile data memory can also be easily used in harsh environments under extreme environmental conditions (e.g. with higher temperature load).

MDS D124	Characteristics	
	Field of application	Application areas in production and distribution logistics and product identification
	Memory	EEPROM 128 bytes gross 112 bytes net capacity
	Read/write range	See Chapter Field data of ISO transponders (Page 47).
	Mounting on metal	Not possible: Recommended distance from metal ≥ 25 mm
	ISO standard	15693 with I-code technology

7.3.2 Ordering data

Table 7- 4 Ordering data for MDS D124

MDS D124	Order number
• IP67 • Memory size: 112 byte EEPROM user memory • Operating temperature: -25 … +125 °C • Dimensions: Ø = 27 mm x 4 mm	6GT2600-0AC00

7.3.3 Metal-free area

Mounting on metal

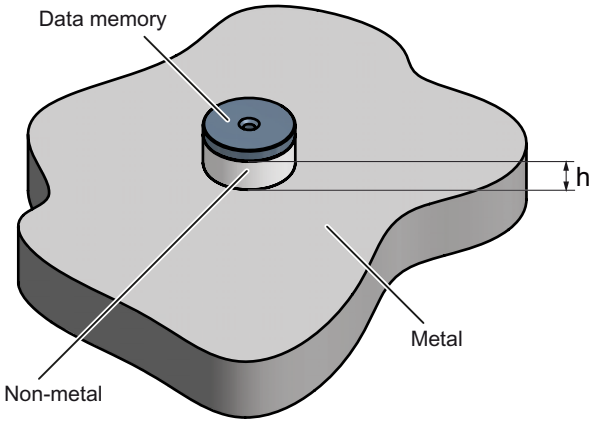

h ≥ 25 mm

Figure 7-7 Mounting of the MDS D124 on metal with spacer

Flush-mounting

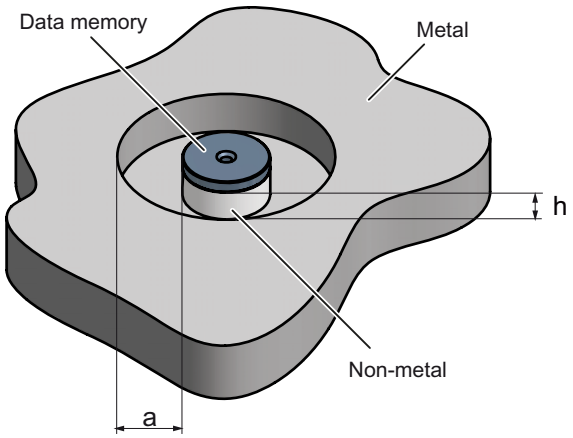

h ≥ 25 mm

a ≥ 25 mm

Figure 7-8 Flush-mounting of MDS D124 in metal with spacer

Note

If the minimum guide values (h) are not observed, a reduction of the field data results. It is possible to mount the MDS with metal screws (M3 countersunk head screws). This has no tangible impact on the range.

7.3.4 Technical specifications

Table 7- 5 Technical data for MDS D124

Memory size	128 bytes
Memory configuration • Serial number • Configuration memory [1)] • AFI/DSFID [1)] • Application memory	 • 8 bytes (fixed code) • 6 bytes • 2 bytes • 112 bytes
Storage technology	EEPROM
Memory organization	EEPROM 128 bytes gross 112 bytes net capacity When using the OPT area, 16 bytes of it must be subtracted in 4 byte blocks
Protocol	to ISO 15693
Data retention (at +40 °C)	10 years
MTBF (at +40 °C)	≥ 1.5 x 10^6 hours
Data transmission rate • Read • Write	 • Approx. 3.5 ms/byte • Approx. 9.5 ms/byte
Read cycles	Unlimited
Write cycles, typical	1 000 000
Write cycles, min.	200 000
Read/write distance (S_g)	See Chapter Field data of ISO transponders (Page 47).
Distance from metal	min. 25 mm (approx. 30% reduction of the field data)
Multitag capability	Yes
Power supply	Inductive power transmission (without battery)
Degree of protection to EN 60529	IP67
Shock according to EN 60721-3-7, Class 7M3 total shock response spectrum, Type II	100 g
Vibration-resistant to EN 60721-3-7, Class 7M3	20 g
Torsion and bending load	Not permissible
Dimensions (D x H) in mm	27 x 4
Color	Black
Material	Epoxy casting resin
Fixing	Adhesive, M3 screw
Tightening torque at +20 °C	≤ 1 Nm (at high temperatures, the expansion coefficients of the materials used must be taken into account)

Ambient temperature	
• Operation	• -25 °C to +125 °C
• Transport and storage	• -40 °C to +150 °C
Weight, approx.	5 g

1) Configuration memory and AFI/DSFID are used/not used by RF300.

7.3.5 Dimension drawings

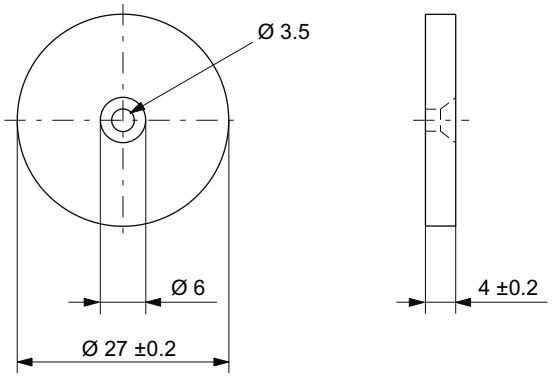

Figure 7-9 Dimensions of MDS D124

7.4 MDS D139

7.4.1 Characteristics

The MDS D139 is a passive, maintenance-free transponder based on the ISO standard 15693.

MDS D139	Characteristics	
	Field of application	Reusable, heat-proof transponders with a limited service life are required for use in production logistics and in assembly lines subject to high temperatures (up to +220 °C).
	Memory	112 byte user memory; considerably less expensive than the heat-proof mobile data storage units available today due to its simple construction (without thermal insulation), but also due to its lack of complexity.
	Read/write range	See Chapter Field data of ISO transponders (Page 47).
	Mounting on metal	Not possible: Recommended distance from metal ≥ 30 mm
	ISO standard	15693

Note

Compatibility with SIMATIC RF300 depending on MLFB number

Only the MDS D139 with MLFB 6GT2600-0AA10 is compatible with SIMATIC RF300.

7.4.2 Ordering data

Table 7- 6 Ordering data for MDS D139

MDS D139	Order number
• IP68 • Memory size: 112-byte user memory • Operating temperature: up to +200 °C/+220 °C [heat-resistant (r/w)] • Dimensions: 85 x 15 (Ø x H in mm)	6GT2600-0AA10

Table 7- 7 Ordering data for MDS D139 accessory

MDS D139 accessory	Order number
Spacers Diameter x height: 85 mm x 30 mm	6GT2690-0AA00

7.4.3 Metal-free area

Mounting on metal

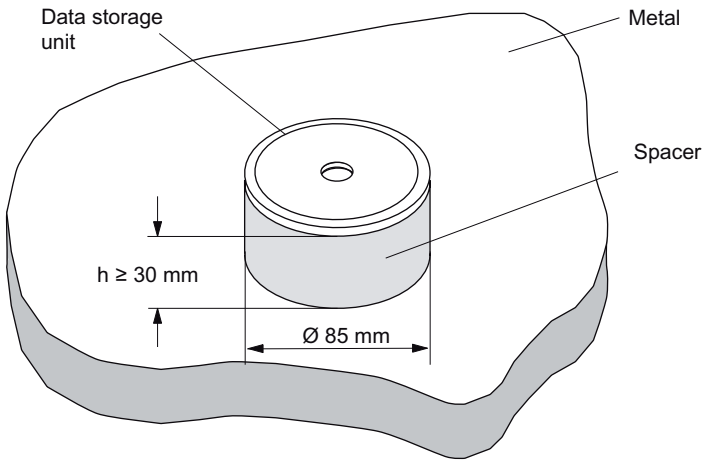

Flush-mounting of the MDS in metal is not permitted!

Figure 7-10 Metal-free area for MDS D139

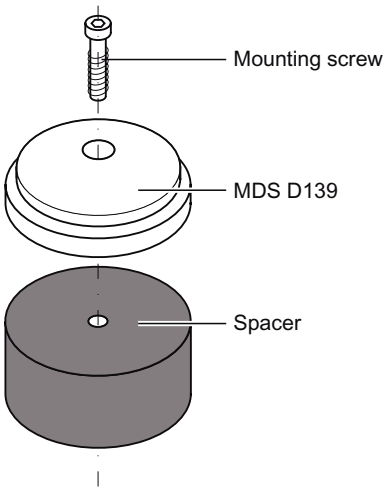

Figure 7-11 MDS D139: Mounting recommended with spacer

Note

If the minimum guide values (h) are not observed, a reduction of the field data results. It is possible to mount the MDS with metal screws (M5). This has no tangible impact on the range. It is recommended that a test is performed in critical applications.

7.4.4 Technical specifications

Table 7- 8 Technical data for MDS D139

Memory size	128 bytes
Memory configuration • Serial number • Configuration memory [1)] • AFI/DSFID [1)] • Application memory	 • 8 bytes (fixed code) • 6 bytes • 2 bytes • 112 bytes
Storage technology	EEPROM
Memory organization	EEPROM 128 bytes gross 112 bytes net capacity When using the OPT area, 16 bytes of it must be subtracted in 4 byte blocks
Data retention	10 years
MTBF	2 x 10^6 hours
Read cycles	Unlimited
Write cycles • at + 40 °C, typical • at + 70 °C, min.	 • 500 000 • 10 000
Read/write distance (S_g)	See Chapter Field data of ISO transponders (Page 47).
Distance from metal	min. 30 mm (approx. 30% reduction of the field data)
Multitag capability	Yes
Power supply	Inductive power transmission (without battery)
Degree of protection to EN 60529	IP68
Shock resistant to EN 60721-3-7, Class 7M3 Total shock response spectrum, Type II	50 g
Vibration-resistant to EN 60721-3-7, Class 7M3	20 g
Torsion and bending load	Not permissible
Dimensions (D x H) in mm	85 x 15
Color	Black
Material	Plastic PPS
Fixing	1x M5 screw [2)]
Tightening torque	1.5 Nm [2]

Ambient temperature	• Operation	-25 °C to +100 °C	Permanent
		+140 °C	20% reduction in the limit distance
		+200 °C 3	Tested up to 4000 hours or 1500 cycles
		+220 °C	Tested up to 2000 hours or 500 cycles
	• Transport and storage	-40 °C to +100 °C	
Weight, approx.		50 g	

1) Configuration memory and AFI/DSFID are used/not used by RF300.

2) For mounting with the spacer (6GT2690-0AA00), use a stainless steel M5 screw to avoid damaging the MDS in high temperatures (expansion coefficient).

In higher temperatures (> +80 °C), observe the expansion coefficient of all materials in order to prevent damage to the transponder due to fastening.

Note that no processing is possible beyond +140 °C.

7.4.5 ATEX

The MDS D139 mobile data memory is classed as a piece of simple, electrical equipment and can be operated in the Category 2G protection zone.

7.4.6 Dimension drawings

Dimensions (in mm)

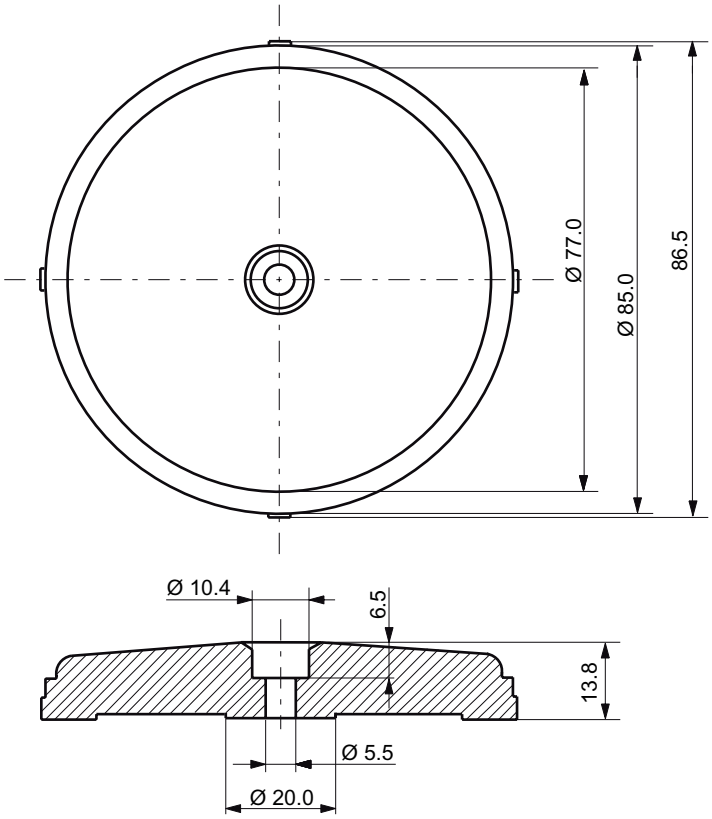

Figure 7-12 Dimensions of MDS D139

7.5 MDS D160

7.5.1 Characteristics

This mobile data memory is a passive, maintenance-free laundry tag based on the ISO 15693 standard with I-Code technology for cyclic applications.

MDS D160	Characteristics	
	Field of application	Typical applications are, for example: • Rented work clothing • Hotel laundry • Surgical textiles • Hospital clothing • Dirt collection mats • Clothing for nursing homes/hostels
	Memory	EEPROM 128 bytes gross 112 bytes net capacity
	Read/write range	See Chapter Field data of ISO transponders (Page 47).
	Mounting on metal	Not possible: Recommended distance from metal ≥ 25 mm
	High resistance	Thanks to its rugged packaging, the MDS D160 is a transponder that can be used under extreme environmental conditions. It is washable, heat-resistant and resistant to all chemicals generally used in the laundry process.
	ISO standard	15693 with I-code technology for cyclic applications

Note

Compatibility with SIMATIC RF300 depending on MLFB number

Only the MDS D160 with MLFB 6GT2600-0AB10 is compatible with SIMATIC RF300.

7.5.2 Ordering data

Table 7- 9 Ordering data for MDS D160

MDS D160	Order number
• IP68 (24 hours, 2 m, +20 °C) • Memory size: 112 byte user memory • Operating temperature: -25 °C ... +70 °C • Dimensions: 16 x 3 ±0.1 (Ø x H in mm) • Laundry tag for cyclical applications (r/w)	6GT2600-0AB10

7.5.3 Metal-free area

Mounting on metal

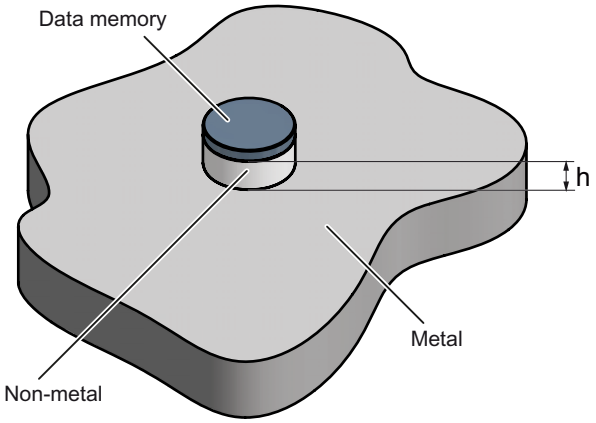

h ≥ 25 mm

Figure 7-13 Mounting of the MDS D160 on metal with spacer

Note

If the minimum guide values (h) are not observed, a reduction of the field data results.
In critical applications, it is recommended that a test is performed.

Flush-mounting

Flush-mounting of the MDS D160 in metal is not permitted!

7.5.4 Technical specifications

Memory size	128 bytes
Memory configuration • Serial number • Configuration memory [1)] • AFI/DSFID [1)] • Application memory	 • 8 bytes (fixed code) • 6 bytes • 2 bytes • 112 bytes
Storage technology	EEPROM
Memory organization	EEPROM 128 bytes gross 112 bytes net capacity When using the OPT area, 16 bytes of it must be subtracted in 4 byte blocks
Protocol	According to ISO 15693
Data retention (at +55 °C)	10 years
MTBF (at +40 °C)	2x 10^6 hours
Data transmission rate • Read • Write	 • Approx. 3.5 ms/byte • Approx. 9.5 ms/byte
Bulk detection/multitag capability	Yes
Data retention	10 years
Read cycles	Unlimited
Write cycles at + 40 °C, typical	1 000 000
Read/write distance (S_g)	See Chapter Field data of ISO transponders (Page 47)
Distance from metal	min. 25 mm (approx. 30% reduction of the field data)
Power supply	Inductive power transmission (without battery)
Degree of protection to EN 60529	IP68 (24 hours, 2 m, +20 °C)
Shock, tested in accordance with IEC 68-2-27	40 g (18 ms; 6 axes; 2000 repeats/h)
Vibration, tested in accordance with IEC 68-2-6	10 g (10 to 2000 Hz; 3 axes; 2.5 h)
Torsion and bending load	Not permissible
Mechanical strength • Isostatic pressure • Axial pressure • Radial pressure	 • 300 bar for 5 min. • 1000 N for 10 s • 1000 N for 10 s
Resistance to chemicals	All chemicals normally used in the washing process
MDS lifespan	At least 100 wash cycles

Mechanical design • Color • Material • Dimensions (D x H) in mm	Pressed, impact-resistant plastic • Gray • PPA (polyphthalamide) • 16 x 3 ±0.1	
MDS fixing	Patch, sew, glue	
Ambient temperature		
• Operation	• -25 °C to +70 °C	• permanent
	• +120 °C	• for 100 hours (20% reduction in the limit distance)
	• +175 °C	• 100 x for 10 minutes
• Transport and storage	• +220 °C	• 1 x for 30 seconds
	• -25 °C to +85 °C	
Weight, approx.	1 g	
* No processing possible from +140 °C upwards		

1) Configuration memory and AFI/DSFID are used/not used by RF300.

Note

- Regeneration time for the MDS D160 between wash cycles must be at least 24 hours
- It is recommended that a test is performed in critical applications.

7.5.5 Dimension drawings

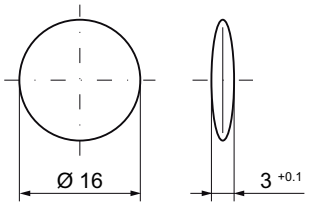

Figure 7-14 Dimensions of MDS D160

7.6 MDS D324

7.6.1 Characteristics

The MDS D324 is a passive, maintenance-free transponder based on the ISO standard 15693 with my-d technology.

MDS D324	Characteristics	
	Field of application	Production and distribution logistics and product identification
	Memory	For the user, the usable application memory amounts to 992 byte.
	Read/write range	See Chapter Field data of ISO transponders (Page 47).
	Mounting on metal	Not possible: Recommended distance from metal ≥ 25 mm
	High resistance	Can also be used in harsh environments under extreme environmental conditions (e.g. with higher temperature load).
	ISO standard	15693 with my-d technology.

7.6.2 Ordering data

Table 7- 10 Ordering data MDS D324

MDS D324	Order number
• IP67 • Memory size: 992 byte EEPROM user memory • Operating temperature: -25 °C...+125 °C • Dimensions: 27 x 4 (Ø x H in mm)	6GT2600-3AC00

7.6.3 Metal-free area

Mounting on metal

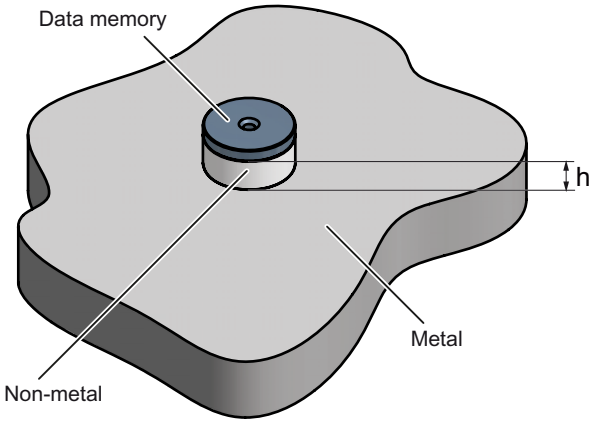

h ≥ 25 mm

Figure 7-15 Mounting of the MDS D324 on metal with spacer

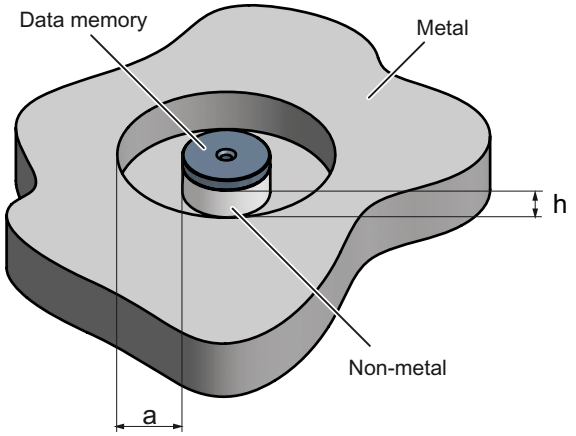

h ≥ 25 mm

a ≥ 25 mm

Figure 7-16 Flush-mounting of MDS D324 in metal with spacer

Note

If the minimum guide values (h) are not observed, a reduction of the field data results. It is possible to mount the MDS with metal screws (M3 countersunk head screws). This has no tangible impact on the range.

7.6.4 Technical specifications

Table 7- 11 Technical data MDS DS324

Memory size	1024 bytes
Memory configuration • Serial number • Configuration memory [1)] • Application memory [1)] • Manufacturer data	 • 8 bytes (fixed code) • 16 bytes • 992 bytes • 8 bytes
Storage technology	EEPROM
Memory organization	1024 EEPROM/gross 992 net capacity When using the OPT area, 16 bytes of it must be subtracted in 4 byte blocks
Protocol	according to ISO 15693
Data retention (at +40 °C)	10 years
MTBF (at +40 °C)	≥ 1.5 x 10^6 hours
Data transmission rate • Read • Write	 • Approx. 3.5 ms/byte • Approx. 9.5 ms/byte
Read cycles	Unlimited
Write cycles, typical	1 000 000
Write cycles, min.	200 000
Read/write distance (S_g)	See Chapter Field data of ISO transponders (Page 47)
Distance from metal	min. 25 mm (approx. 30% reduction of the field data)
Multitag capability	Yes
Anti-collision speed	Approx. 20 transponders/s simultaneously identifiable
Power supply	Inductive power transmission (without battery)
Degree of protection to EN 60529	IP67
Shock according to EN 60721-3-7, Class 7M3 total shock response spectrum, Type II	100 g
Vibration-resistant to EN 60721-3-7, Class 7M3	20 g
Torsion and bending load	Not permissible
Dimensions (D x H) in mm	27 x 4
Color	Black
Material	Epoxy casting resin
Fixing	Adhesive, M3 screw
Tightening torque at +20 °C	≤ 1 Nm (at high temperatures, the expansion coefficients of the materials used must be taken into account)

Ambient temperature	
• Operation	• -25 °C to +125 °C
• Transport and storage	• -40 °C to +150 °C
Weight, approx.	5 g

1) Configuration memory and AFI/DSFID are used/not used by RF300.

7.6.5 Dimension drawings

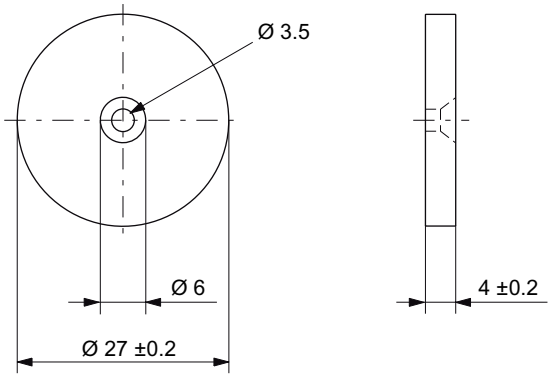

Figure 7-17 Dimensions of MDS D324

System integration 8

The communication modules (interface modules) are links between the RFID components (reader and transponder) and the higher-level controllers (e.g. SIMATIC S7), or PCs or computers.

8.1 Introduction

RF310R, RF340R, RF350R and RF380R readers are connected to the controller via the following interface/communication modules:

- ASM 452
- ASM 456
- ASM 473
- ASM 475
- RF170C
- RF180C
- 8xIQ-Sense

Function blocks, interface modules/communication modules and readers

Function blocks are used for integration into the SIMATIC. Using these, the input parameters are transferred to the reader using the "init_run"(RESET) command.

You can find more detailed information on the software parameterization in Product Information "FB 45 and FC 45 input parameters for RF300 and ISO transponders" (http://support.automation.siemens.com/WW/view/en/33315697) or the Function Manuals FB 45 (http://support.automation.siemens.com/WW/view/en/21738808) and FC 45 (http://support.automation.siemens.com/WW/view/en/21737722) as of the A3 edition.

Interface modules/communication modules and function blocks

The following table shows the most important features of the interface modules/communication modules, as well as the compatible function blocks.

Table 8- 1 Overview of interface modules/communication modules

ASM/ communication module	Interfaces to the application (PLC)	Interfaces to the reader	Function blocks	Reader connections	Dimensions (W x H x D) in mm	Temperature range	Degree of protection
ASM 452	PROFIBUS DP-V1	2 x 8-pin socket, M12	FC 45	1	134 x 110 x 55	0 °C to +55 °C	IP67
ASM 456	PROFIBUS DP-V1	2 x 8-pin socket, M12	FB 45 FC 55 FC 56	2 (parallel) *	60 x 210 x 54 or 79	0 °C to +55 °C	IP67
ASM 473	PROFIBUS DP-V1	2 x 8-pin socket, M12	FC 45 FB 45 FC 55	1	87 x 110 x 55	0 °C to +55 °C	IP67
ASM 475	S7-300 (central), ET200M (PROFIBUS)	Via screw terminals in front connector	FC 45 FB 45 FC 55	2	40 x 125 x 120	0 °C to +60 °C	IP20
SIMATIC RF170C	PROFIBUS DP-V1 PROFINET I O	2 x 8-pin socket, M12	FB 45 FC 55	2 (parallel) *	90 x 130 x 60	-25 °C to +55° C	IP67
SIMATIC RF180C	PROFINET I O	2 x 8-pin socket, M12	FB 45	2 (parallel) *	60 x 210 54	0 °C to +60° C	IP67
8xIQ-Sense	8xIQ-Sense	Via screw terminals in front connector	FC 35	2 (parallel) *	40 x 125 x 120	0 °C to +60 °C	IP20

*) If 2 readers are used on one ASM, the following restrictions apply:

- The maximum operating temperature is 35 °C
- The input voltage is 24 V ±10%

Current consumption ≤ 425 mA per reader

8.2 ASM 452

8.2.1 Features

Area of application

The ASM 452 interface module is a MOBY module for operating MOBY and RF300 components with RS422 over PROFIBUS DP-V1 on

- Any computers and PCs
- Any PLCs

When operating the interface module on a SIMATIC S7, function blocks are made available to the user.

Figure 8-1 Interface module ASM 452

The ASM 452 is the result of consistent development of the familiar ASM 450/451 interface modules. Optimal data throughput can be achieved even in large-scale PROFIBUS configurations thanks to the use of acyclic data traffic on PROFIBUS DP V1. The minimum cyclic data load of the ASM 452 on the PROFIBUS provides the user with the guarantee that other PROFIBUS nodes (e.g. DI/DO) can still be processed at great speed.

The ASM 452 is an interface module for communication between PROFIBUS and the RF310R with RS422 interface. Through the ASM 452, the data on the RF300 transponder can be physically addressed ("Normal" addressing). In SIMATIC S7, FC 45 is available for this purpose.

8.2.2 Ordering data

Table 8- 2 Ordering data for ASM 452 and accessories

Product description	Order No.
ASM 452 interface module for PROFIBUS DP-V1, 1x RF3xxR with RS422 interface, without connector for 24 V DC and PROFIBUS	6GT2002-0EB20
Accessories:	
Connector for PROFIBUS DP and 24 V supply	6ES7194-1AA00-0XA0
Connecting cable RF3xxR ↔ ASM 452	
Plug-in cable, pre-assembled, length: 2 m (standard length)	6GT2891-1CH20
Plug-in cable, pre-assembled, length: 5 m	6GT2891-1CH50
Opt. Cable connector without read/write device cable (for cable lengths > 20 m) ASM 452 ↔ reader	6GT2090-0BC00
M12 blanking cap for unused RF310R connection (1 pack = 10 pieces)	3RX9802-0AA00
CD "RFID Systems Software & Documentation" with FC 45, GSD file	6GT2080-2AA10
Replacement part: Connector plate; T functionality for PROFIBUS connection	 6ES7194-1FC00-0XA0
FC 45 Reference Manual German English French	 Available in electronic form on the CD "RFID Systems Software & Documentation"

The ASM 456 plug-in cables 6GT2891-0Fxxx can be used as extension cables.

8.2.3 Pin assignment and display elements

Pin assignments

The figure below illustrates the pin assignments of ASM 452.

ASM 452

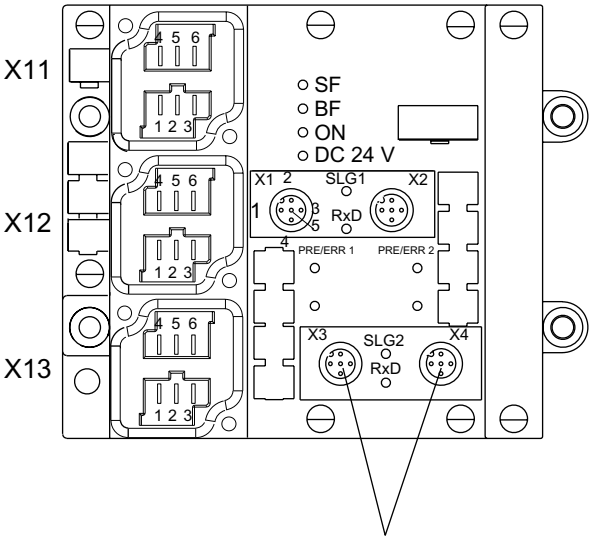

Not available for RF300

LEDs for PROFIBUS DP

SF: System Fault
BF: Bus Fault

ON: Lights up when there is ASM (is generated by the 24 V supply voltage).
24 V DC: Lights up when the 24 V supply voltage is connected to the ASM.

LEDs for RF300 and ASM 452

RxD: Reader active with
PRE/ERR 1 Transponder present or error display
(PRE/ERR 2) for reader
(The "transponder present" display always takes priority. The error is only indicated when a transponder is not present.)

Transponder present: The LED is permanently ON. If more than one transponder is in the field, the number of transponders is indicated by short interruptions. A fault is not output.
Error display:

The LED is permanently OFF. The last error number is indicated by brief light pulses.
Reader 1: Reader 1 is selected
(Reader 2) (Reader 2 is selected.)
Only reader 1 can be selected.

Socket	Pin assignment		
X11 and X12 (PROFIBUS DP)	1	Signal	B
	2	PE	
	3*	PE	
	4	Signal	A
	5*	L+	
	6*	M	
X13 (Supply voltage)	1	PE	
	2	L+	
	3	M	
	4	PE	
	5	L+	
	6	M	

* Not connected

Socket	Pin assignment (reader)		
X1 (X3) (red) (green)	1	+RxD	
	2	+TxD	
	3	-TxD	
	4	-RxD	
	5	PE	
X2 (X4)		X2	X4
	1	+24 V	+24 V
	2	DA1	DE 1
	3	0 V	0 V
	4	DA0	DE 0
	5	PE	PE

Figure 8-2 Pin assignment and LEDs of ASM 452

8.2.4 Configuration

Hardware description

The ASM 452 has the same housing as the distributed I/O system ET 200X. General information on ASM 452 (e.g.: assembly, operation and wiring; general technical data) is available in the ET200X manual (Order No. 6ES7 198-8FA00-8AA0). Descriptions of accessories and network components can also be found in this manual.

Configuration

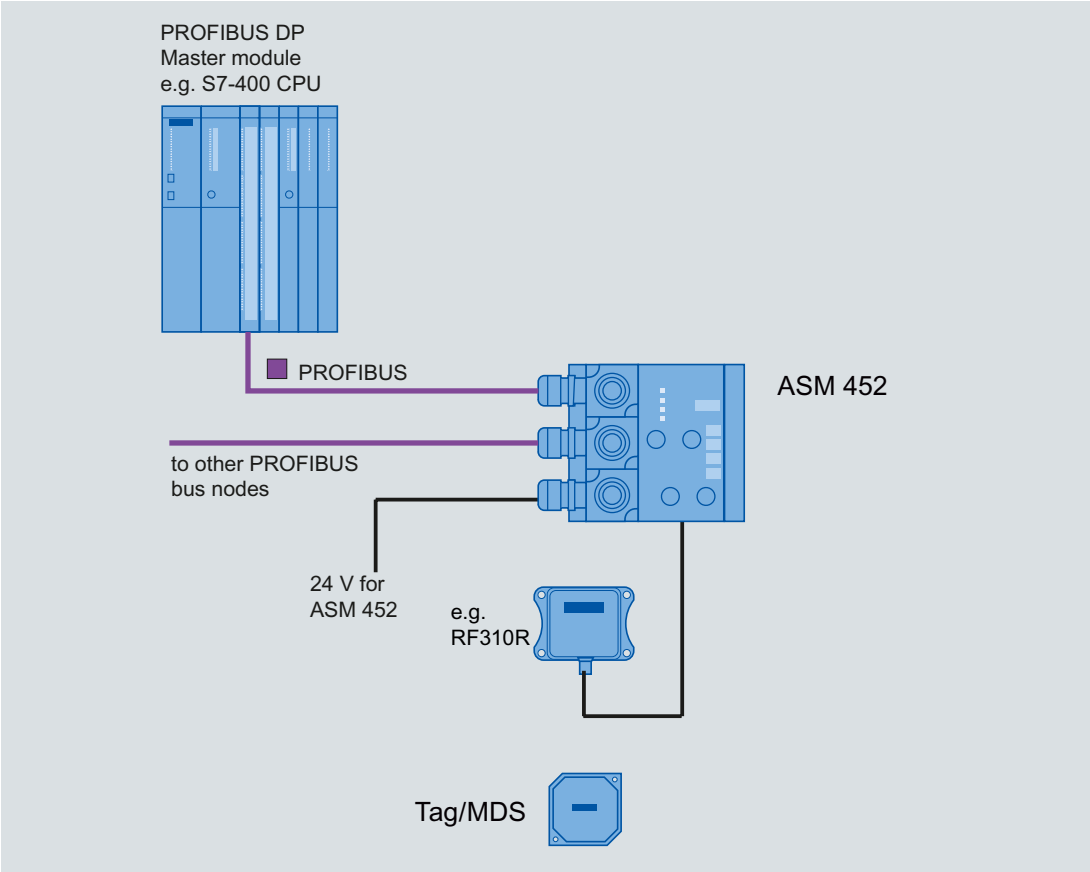

Figure 8-3 Configuration of ASM 452

PROFIBUS configuration

The ASM 452 is integrated into the hardware configuration by means of a GSD file. The ASM can then be configured using the HW Config of SIMATIC Manager or another PROFIBUS tool.
A GSD file is provided for ASM 452 on the CD "RFID Systems Software & Documentation".

Operating mode of the ASM 452

The approved operating modes of ASM 452 are described in the GSD file. It is set using the hardware configuration tool (e.g. STEP 7 HW Config).

Reader connection system

A reader always occupies two M12 connector sockets on the ASM 452.
A pre-assembled cable therefore ensures easy connection of the reader (see figure below).
The connecting cable is available in lengths of 2 m (standard) and 5 m. Extensions are possible up to 1000 m using connecting cables 6GT2891-… .

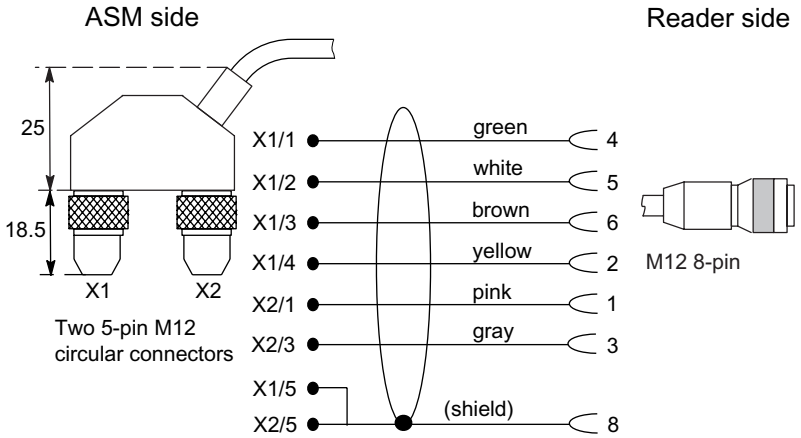

Figure 8-4 Connecting cable (2 m) ASM 452/473 ↔ RF3xxR reader with RS422 (6GT2891-1CH20)

Cable installation

Signal	M12 (reader side)	Cable	X1 / Data	X2
24 V DC	1	Pink	-	1
TX -	2	Yellow	4	-
GND	3	Gray	-	3
TX +	4	Green	1	-
RX +	5	white	2	-
RX -	6	brown	3	-
-			-	-
Shield	8 + terminal piece	Shield	5	5

Cable assignment ASM 452/473 ↔ RF3xxR reader with RS422 (6GT2891-1CH20)

A reader cable connector with screw-type terminals is provided for users who want to individually pre-assemble their own cables (see figure below). Cables and reader cable connectors can be ordered from the MOBY catalog.

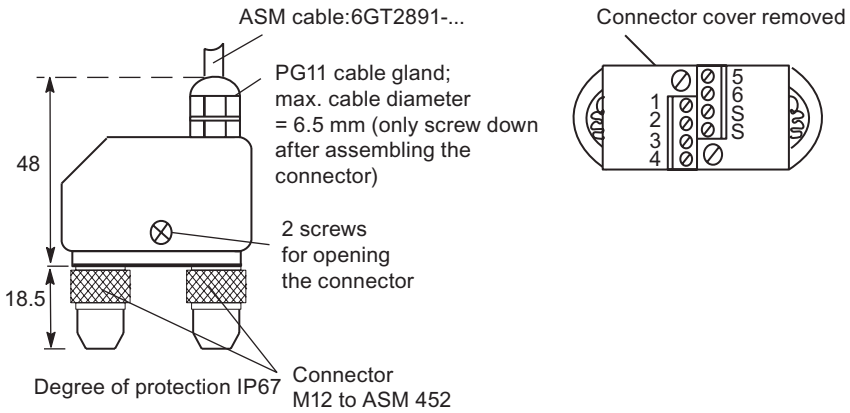

Figure 8-5 Cable connector ASM 452/473 ↔ RF3xx reader with RS422 (6GT2090-0BC00)

Pin assignment for ASM 452/473 cable connector

Connector pin	Connection to pin of the reader	Wire color
1	4	Note data sheet provided by the manufacturer
2	5	
3	6	
4	2	
5	3	
6	1	
	-	
S	8 + terminal piece	
Pin 7 must not be connected.		

PROFIBUS cable with 24 V supply

The ASM 452 can also be operated with the "green" PROFIBUS cable. It is important to ensure that a 24 V cable is connected from X12 to X13. The 24 V cable can be connected to pins 5 and 6 in plug X12.

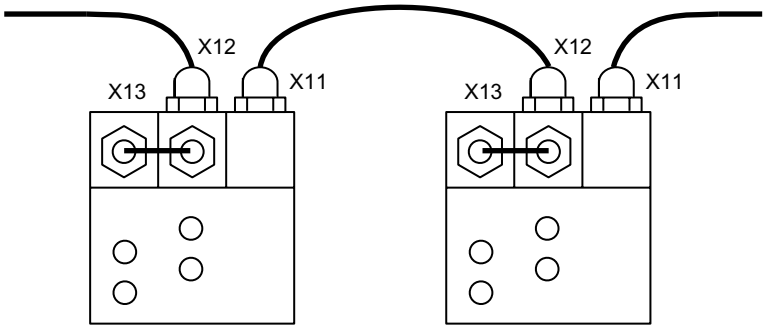

Figure 8-6 PROFIBUS cable with 24 V supply

PROFIBUS address and terminating resistor

You must remove the connector plate from the ASM before you set the PROFIBUS address or connect the terminating resistor. The connector plate covers the DIL switch. The position of the DIL switch in ASM is shown in the figure below with one setting example for each case.

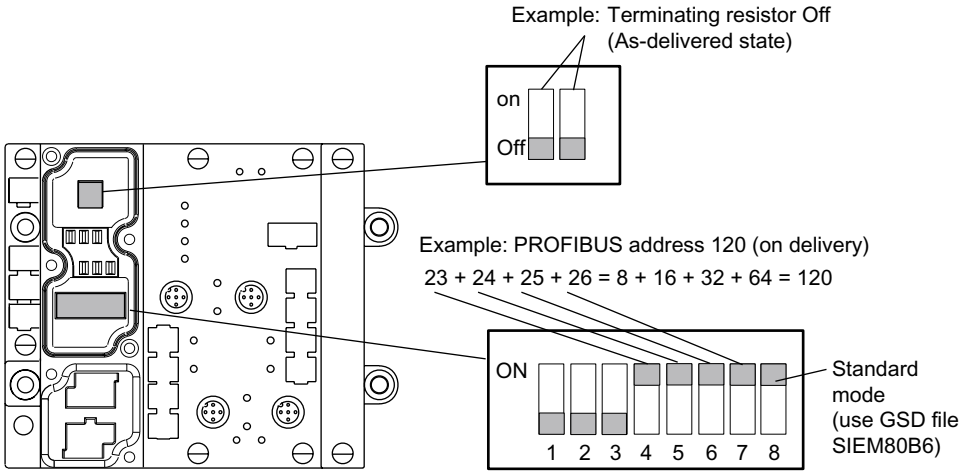

Figure 8-7 Setting the PROFIBUS address/connecting the terminating resistor

Note

- The PROFIBUS address in ASM 452 must always match the PROFIBUS address defined in the configuring software for this ASM.
- To ensure that the terminating resistor functions correctly, you must always switch **both** DIL switches of the terminating resistor to "on" or "off".

8.2.5 Technical data

Table 8- 3 Technical data for ASM 452

Serial interface to the user	PROFIBUS DP-V1
Procedure after connection	EN 50170 Vol. 2 PROFIBUS PG 11 cable gland PROFIBUS and power supply connectors are not included in the scope of delivery
Transmission rate	9600 baud to 12 Mbaud (automatic detection)
Max. block length	2 words cyclic/240 bytes acyclic
Serial interface to the RF3xxR	
Connector	2 x M12 coupler plug
Max. cable length	2 m = Standard length, 5 m, 10 m, 20 m and 50 m, (up to 1000 m on request)
Readers that can be connected	1x RF3xxR with RS422 interface
Software functions	
Programming	Depending on the PROFIBUS DP master
Function blocks for SIMATIC S7	FC 45
Transponder addressing	Direct access via addresses
Commands	Initialize transponder, read data from transponder, write data to transponder
Multi-tag capability	No
S7 data structures via UDTs	Yes
Power supply	
Rated value	24 V DC
Permissible range	20 V to 30 V DC
Current consumption	Max. 180 mA; typ. 130 mA (without reader)
Digital inputs	none
Digital outputs	none
Ambient temperature	
Operation	0 °C to +55 °C
Storage and transport	-40 °C to +70 °C
Dimensions (W x H x D) in mm	134 x 110 x 55 (without bus connector)
Fixing	4 M5 screws; for mounting on any plate or wall
Weight, approx.	0,5 kg
Degree of protection	IP67
MTBF (at 40 °C)	30 • 104 hours = 34 years

8.2.6 PROFIBUS Diagnosis

The following table lists possible error indications with their meanings and provides remedies.

Table 8- 4 LED indication for PROFIBUS diagnosis

"BF" LED	"SF"LED	Cause of error	Error correction
ON	*	• ASM 452 is in start-up mode.	-
		• The connection to the DP master has failed. • ASM 452 not detecting a baud rate.	• Check the PROFIBUS DP connection. • Check the DP master.
		• Bus interrupt • DP Master not functioning	• Check all cables on your PROFIBUS DP network. • Check whether the connector plugs for PROFIBUS DP are securely plugged into the ASM 452.
flashes	on	• The configuration data sent to the ASM 452 by the DP master do not match the configuration of the ASM 452.	• Check the configuration of the ASM 452 (input/output, PROFIBUS address). • Correct GSD file being used? – SIEM80B6.GSD for ASM 452
Flashes	Off	• ASM 452 has detected the baud rate, but is not being addressed by the DP Master. • ASM 452 has not been configured.	• Check the PROFIBUS address set on the ASM 452 or in the configuration software. • Check the configuration of the ASM 452 (station type).
on	Flashes	• There is a hardware defect in the ASM 452.	• Replace the ASM 452.

8.2.7 Dimension drawing

The following figure shows the dimensional drawing of an ASM 452 with bus connectors. You must add the length of the PG cable gland and the radius of the cable used to the measured overall width and depth.

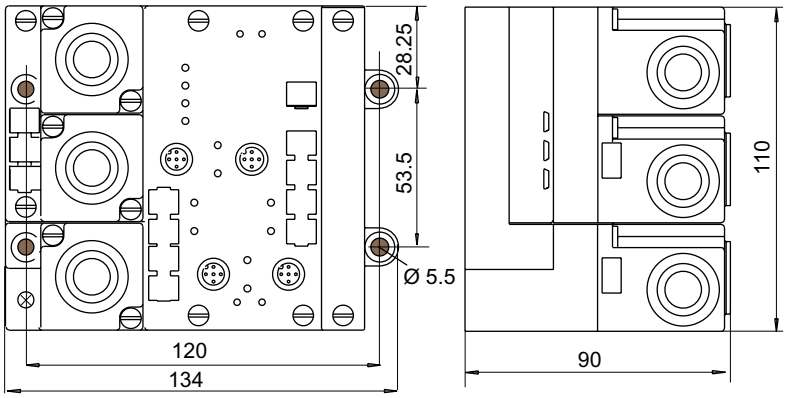

Figure 8-8 Dimensional drawing of ASM 452

Example of stripped lengths

The following diagram shows an example of stripped lengths. The lengths apply to all cables which can be connected to the connector plugs. You must twist any shield braid present, plug into a core end sleeve and cut off any excess.

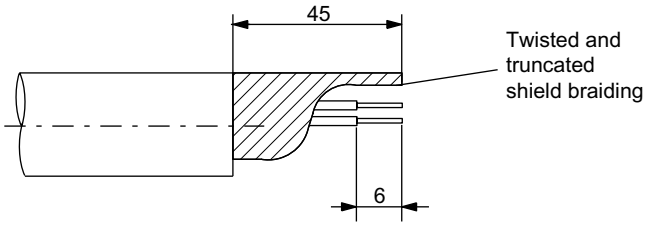

Figure 8-9 Length of stripped insulation for PROFIBUS cables

8.3 ASM 456

Configured with ASM 456

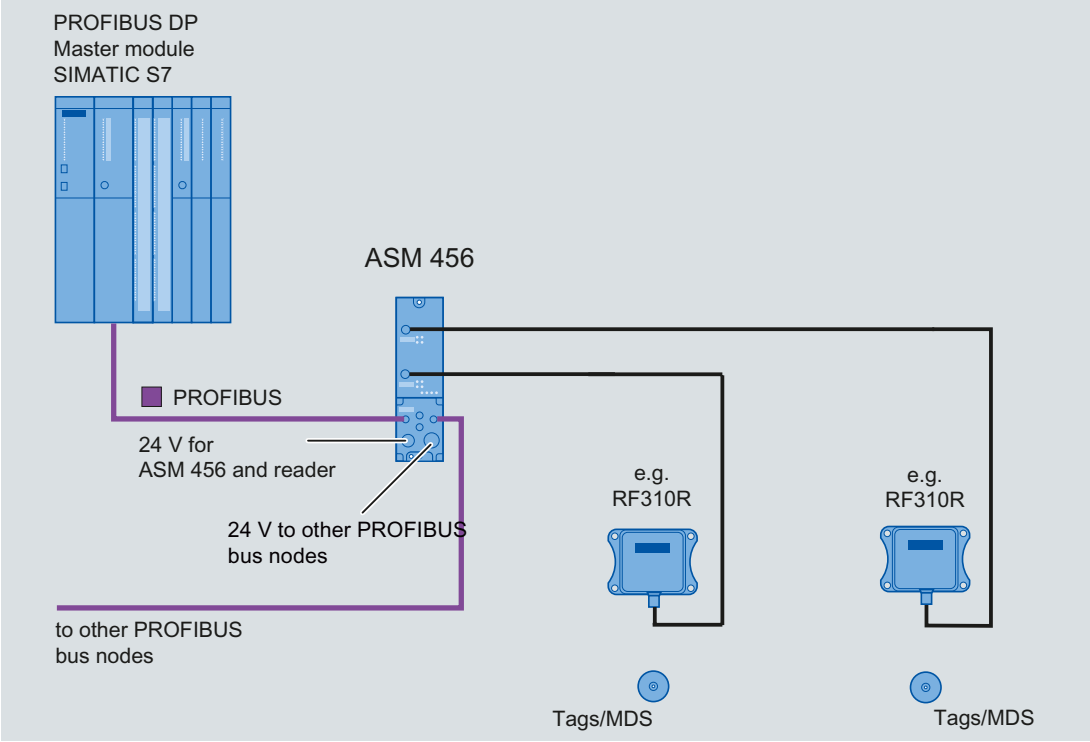

Figure 8-10 Configuration of ASM 456

For more detailed information, please refer to ASM 456 Operating Instructions (http://support.automation.siemens.com/WW/view/en/32629442).

8.4 ASM 473

8.4.1 Features

Field of application

The ASM 473 interface module is an RF300 module for SIMATIC S7. It can be plugged into the ET 200X distributed I/O station and DESINA. ET 200X is operated by the user over PROFIBUS DP V1. An S7-300 or S7-400 with integrated PROFIBUS connection can be used as the controller.

ASM 473 supplements the SIMATIC S7 interface module ASM 475. The IP67 degree of protection means that it can be installed and operated in the process without the need for an additional protective housing.

To operate the ASM 473, an ET 200X basic module BM 141/142 with the order number 6ES7141-1BF11-0XB0 or 6ES7142-1BD21-0XB0 or a BM 143 is required.

The transponder data are accessed by means of physical addressing of the transponder.

For operation in a SIMATIC S7, the function FC 45 is available. The hardware of the ASM 473 is configured with an object manager (OM) that is integrated in the SIMATIC Manager.

Figure 8-11 Interface module ASM 473

Other features:

- Up to 7 ASM 473 interface modules can be operated simultaneously in an ET 200X station.
- Any other I/O modules from the ET 200X spectrum can be operated with the ASM 473.

8.4.2 Ordering data

Table 8- 5 Ordering data for ASM 473 and accessories

Product description	Order No.
Interface module ASM 473 1x RF3xxR reader with RS422 interface	6GT2002-0HA10
Accessories:	
Connecting cable ASM 473 ↔ Reader RF3xxR	
Plug-in cable, pre-assembled, length 2 m (standard length)	6GT2891-1CH20
Plug-in cable, pre-assembled, length 5 m	6GT2891-1CH50
Opt. Cable connector without reader cable (for cable lengths > 20 m) ASM 473 ↔ Reader	6GT2090-0BC00
CD "RFID Systems Software & Documentation" with FC 45, GSD file	6GT2080-2AA10
FC 45 Reference Manual German English French	Available in electronic form on the CD "RFID Systems Software & Documentation"

8.4.3 Pin assignment and display elements

Pin assignments

The figure below illustrates the pin assignment for the read/write device and the display elements.

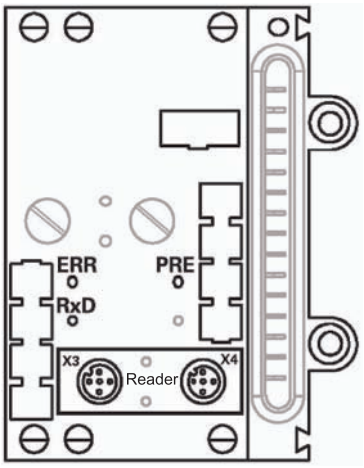

Socket	Pin assignment (reader)	
X3	1	+RxD
	2	+TxD
	3	-TxD
	4	-RxD
	5	PE
X4	1	+24 V
	2	n. c.
	3	0 V
	4	n. c.
	5	PE

LEDs for PROFIBUS DP

General indicators (SF, BF, ON, 24VDC) are located on the basic module of the ET 200X.

LEDs for MOBY

RxD: Reader active with command
PRE: Indicates the presence of a transponder
ERR: Error indicated by flashing sequence

The following ASM states are also indicated with the LEDs "PRE" and "ERR":

PRE	ERR	Description, Causes, Remedy
OFF/ON	ON (perm.)	Hardware is defective (RAM, flash,...)
ON	OFF	Charger is defective (can only be repaired in the factory).
2 Hz	OFF	Firmware loading is active or no firmware detected → Load firmware → ASM must not be switched off until loaded
2 Hz	2 Hz	Firmware loading terminated with errors → Restart required → Load firmware again → Check update files
5 Hz	5 Hz	Operating system error → Switch ASM or ET 200X base station OFF/ON
OFF	1 x flash every 2 s	ASM has booted and is waiting for a RESET (init_run) from the user

Figure 8-12 Interfaces and indicators of the ASM 473 for RF300

8.4.4 Configuration

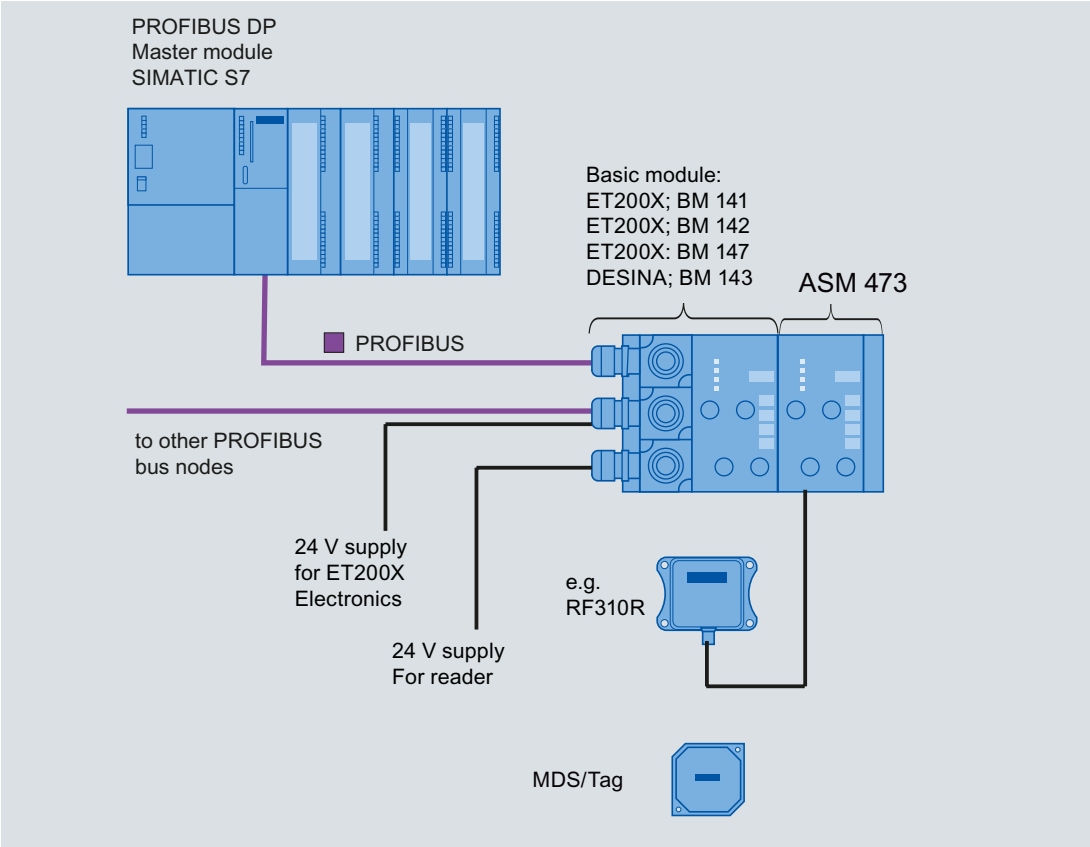

Figure 8-13 Configuration of ASM 473

Note

It differs from ASM 452 in that for ET 200X the 24 V supply must be connected to the PROFIBUS connector **and** on the load voltage connector (see the ET 200X manual).

Basic module - Requirements for operation of ASM 473

The following table indicates the status of the ET 200X basic module of 10/2002. The functionality of new basic modules is stored in HW Config of the SIMATIC Manager.

Table 8- 6 Requirements for operation of ASM 473

Order number of the ET 200X basic module	For operation with ASM 473 (6GT2002-0HA00)*	For operation with ASM 473 PARAM (6GT2002-0HA10)
6ES7141-1BF00-0XB0	No	No
6ES7141-1BF00-0AB0	Yes	Yes
6ES7141-1BF01-0XB0	No	No
6ES7141-1BF10-0XB0	No	No
6ES7141-1BF11-0XB0	Yes	Yes
6ES7141-1BF40-0AB0	Yes	Yes
6ES7142-1BD10-0XB0	No	No
6ES7142-1BD11-0XB0	No	No
6ES7142-1BD20-0XB0	No	No
6ES7142-1BD21-0XB0	Yes	Yes
6ES7142-1BD22-0XB0	No	Yes**
6ES7143-1BF00-0AB0	Yes	Yes
6ES7143-1BF00-0XB0	Yes	Yes
6ES7147-1AA00-0XB0	No	No
6ES7147-1AA01-0XB0	No	Yes

* Discontinued

** Notes on operation:
In HW Config, please parameterize the module 6ES7142-1BD21-0XB0.

Example for a maximum configuration of ASM 473 on an ET 200X

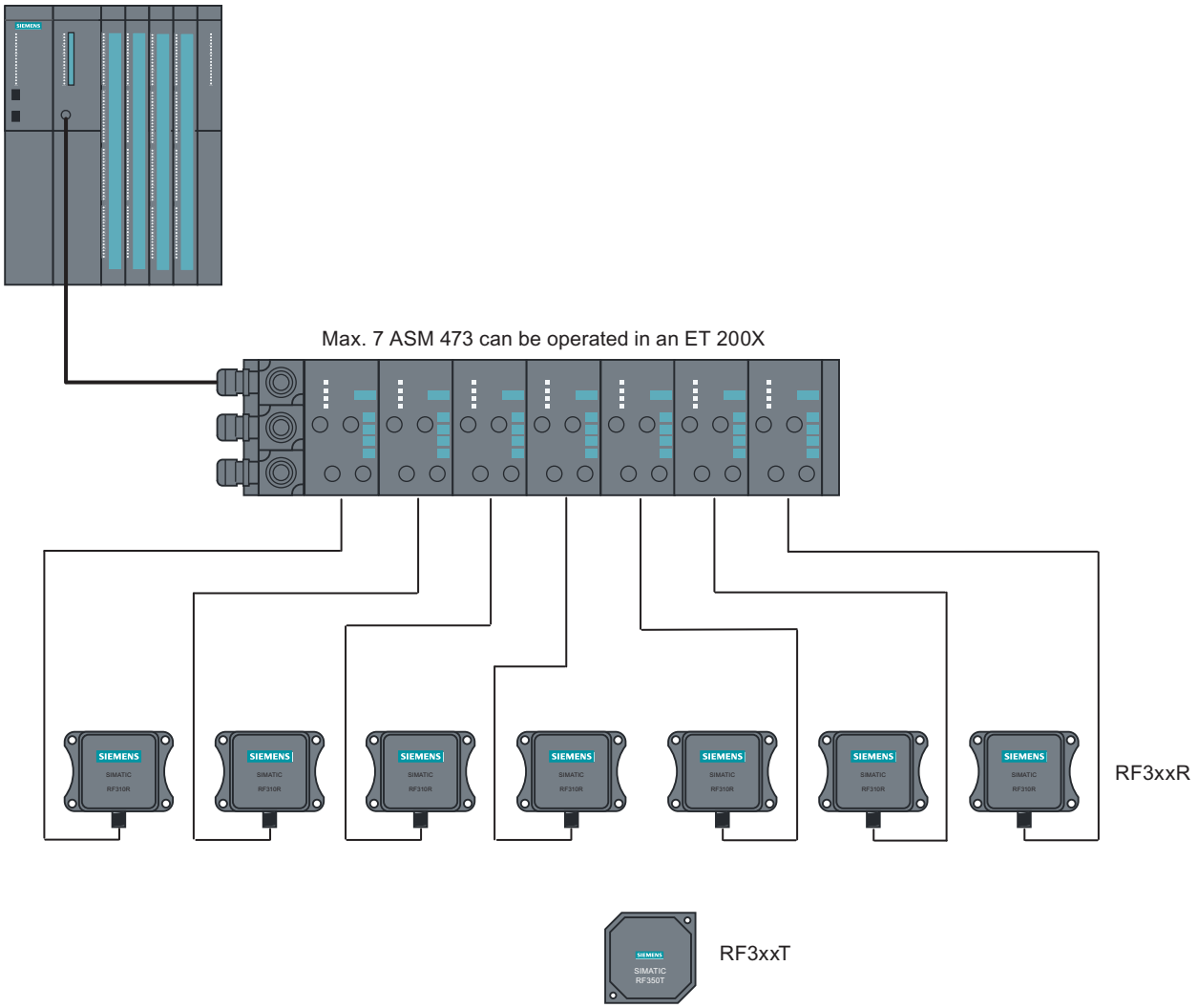

Figure 8-14 Example for a maximum configuration of ASM 473 on an ET 200X

Depending on the PROFIBUS master, up to 123 ET 200X modules can be run on one PROFIBUS branch.

Hardware configuration

The ASM 473 is integrated in the hardware configuration of the SIMATIC Manager by calling Setup.exe in the directory daten\S7_OM on the "RFID Systems Software & Documentation" CD. Currently, the ASM 473 cannot be integrated in masters of other manufacturers.

Reader connection system

A reader always occupies the two M12 connection sockets X3 and X4 on the ASM 473. A prefabricated cable makes it easy to connect the reader. The standard version of the connecting cable is 2 m in length. Other cable lengths are available on request.
For customers who want to assemble their own cables, an ASM cable connector with screw-type terminals is available. Cables and ASM cable connectors can be ordered from the MOBY catalog.

8.4.5 Technical data

Table 8- 7 Technical specifications for ASM 473

Interface for ET 200X	SIMATIC S7 I/O bus cyclic/acyclic services
Communication	2 words cyclic/238 bytes acyclic
Command buffer in ASM	142 x 238 bytes
Serial interface to the reader	
• Connector	2 x M12 coupler plug
• Max. cable length	2 m = standard length; other pre-assembled cables = 5 m, (up to 1000 m on request)
• Readers that can be connected	1 x RF3xxR reader with RS422
Software functions	
Programming	Depending on the PROFIBUS DP master
Function blocks for SIMATIC S7	FC 45, FB 45, FC 55
MDS addressing	Direct access via addresses
Commands	Initialize transponder, read data from transponder, write data to transponder, etc.
PROFIBUS Diagnosis	Yes; in accordance with ET 200X basic station
S7 diagnostics	Yes, can be called up via S7 OM
Reloadable firmware	Yes, via S7 OEM
Power supply [1]	
• Rated value	24 V DC
• Permissible range	20.4 V to 28.8 V DC
Current consumption	Typ. 75 mA; max. 500 mA (or see Technical specifications of the connected reader)
Power dissipation of the module	Typically 1.6 W
Digital outputs/inputs	Via expansion modules from the ET 200X spectrum
Ambient temperature	
• Operation	0 °C to +55 °C
• Transport and storage	-40 °C to +70 °C
Dimensions (W x H x D) in mm	
• Single unit	87 x 110 x 55
• Width module	60 x 110 x 55
Fixing	2 M5 screws (customer side) 2 M3 screws (product side)
Degree of protection	IP67
Weight, approx.	0.275 kg

For installation instructions and general technical data, see the ET 200X manual.

8.4.6 Dimensional drawings

Dimension drawing for mounting holes

The figure below shows the dimensions for the position of the holes for the fixing screws for a basic module and an ASM 473 expansion module.

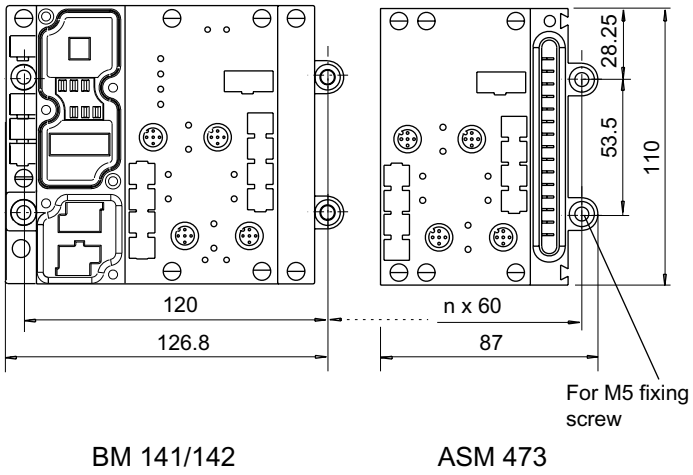

n = Number of expansion modules

Figure 8-15 Dimensions for fixing holes for basic modules and expansion modules

Example of stripped lengths

The following diagram shows an example of stripped lengths. The lengths apply to all cables which can be connected to the connector plugs. You must twist any shield braid present, plug into a core end sleeve and cut off any excess.

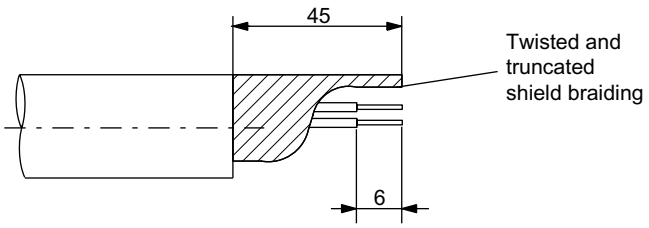

Figure 8-16 Length of stripped insulation for PROFIBUS cables

8.5 ASM 475

8.5.1 Features

Area of application

The ASM 475 interface module acting as the link between all RF300 systems and SIMATIC S7-300 performs the functions of a communication module. It can be operated centrally in the S7-300 or decentrally in an ET200M.

As many as eight ASM 475 interface modules can be plugged into one SIMATIC S7-300 rack and operated. In a configuration with several racks (max. four), the ASM 475 can be plugged into and operated on any rack. This means that as many as 32 ASMs can be operated in the maximum configuration of a SIMATIC S7-300. The ASM can also be operated in the ET 200M distributed I/O on PROFIBUS. Operation in an S7-400 environment is therefore problem-free. Up to 8 ASMs can be operated on each ET200M.

Error messages and operating states are indicated by LEDs.
A configuration that is resistant to interference is possible due to electrical isolation between the read/write device and the SIMATIC S7-300 bus.

Figure 8-17 Interface module ASM 475

The ASM 475 with the order number 6GT2002-0GA10 is a parameterizable module. The basic functions of the module are then already specified when the module is configured in HW Config (e.g. standard addressing).

The data in the MDS is accessed direct by means of physical addresses using the ASM 475. Operation in a SIMATIC S7 is controlled by the function FC 45.

ASM 475 and FC 45 form a unit that is used for reading the data of the MDS easily and at optimal speed.

8.5.2 Ordering data

Table 8- 8 Ordering data for ASM 475 and accessories

Product description	Order No.
ASM 475 interface module for SIMATIC S7 2 x RF3xxR reader with RS422 can be connected in parallel, without front connector	6GT2002-0GA10
Accessories:	
Front connector (1 x per ASM)	6ES7392-1AJ00-0AA0
Connecting cable ASM 475 ↔ RF3xxR	
Plug-in cable, pre-assembled, length: 2 m (standard length)	6GT2891-0EH20
Plug-in cable, pre-assembled, length: 5 m	6GT2891-0EH50
Terminal element (1 x per reader cable)	6ES7390-5BA00-0AA0
Shield connecting element	6ES7390-5AA00-0AA0
CD "RFID Systems Software & Documentation" with FC 45, S7 object manager	6GT2080-2AA10
FC 45 Reference Manual German English French	Available in electronic form on the CD "RFID Systems Software & Documentation"

The ASM 456 plug-in cables 6GT2891-0Fxxx can be used as extension cables.

8.5.3 Indicators

Bezel and indicator elements

The figure below illustrates the bezel of the ASM 475 and the inside of the front door complete with the associated connection diagram. The read/write devices must be connected to the ASM in accordance with the connection diagram.

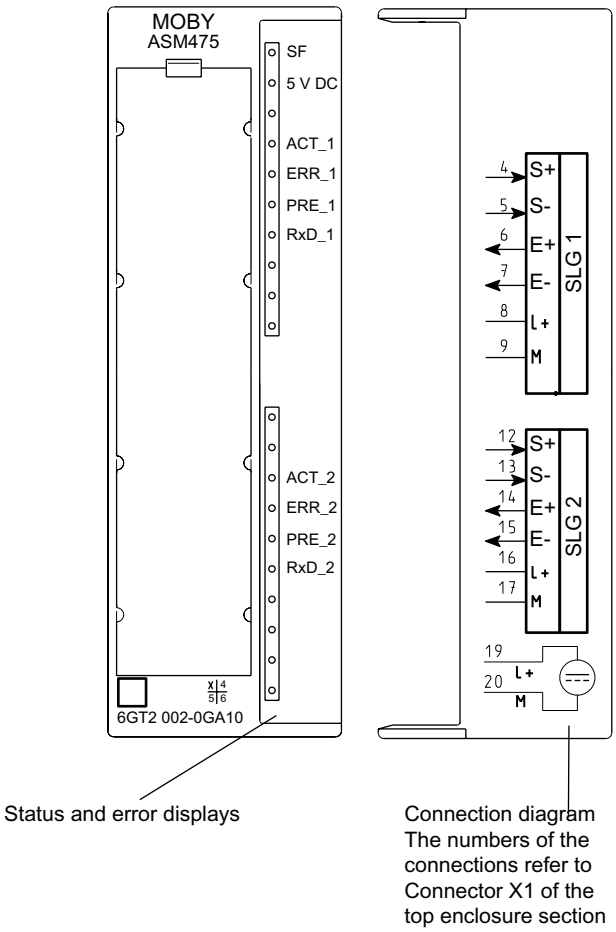

Figure 8-18 Bezel and inside of the front door of the ASM 475

Display elements on the ASM

Table 8- 9 Function of the LEDs on the ASM 475

Light emitting diode	Meaning
SF	System fault (hardware error on ASM)
DC 5V	24 V are connected to ASM and the 5 V voltage on ASM is OK.
ACT_1, ACT_2	The corresponding reader is active in processing a user command.
ERR_1, ERR_2	A flashing pattern indicates the last error to occur. This display can be reset using the parameter Option 1.
PRE_1, PRE_2	Indicates the presence of a transponder.
RxD_1, RxD_2	Indicates live communication with the reader. In the event of a fault on the reader, this display may also be lit.

On the ASM 475, further operating states are indicated with the LEDs PRE, ERR and SF:

Table 8- 10 Operating status display on ASM 475 via LEDs

SF	PRE_1	ERR_1	PRE_2	ERR_2	Meaning
ON	OFF/ON	ON (perm.)	OFF/ON	ON (perm.)	Hardware is defective (RAM, Flash, etc.)
ON	OFF	ON	OFF	OFF	Charger is defective (can only be repaired in the factory).
OFF	2 Hz	OFF	2 Hz	OFF	Firmware loading is active or no firmware detected • Firmware download • ASM must not be switched off
OFF	2 Hz	2 Hz	2 Hz	2 Hz	Firmware loading terminated with errors • Restart required • Load firmware again • Check update files
Any value	5 Hz	5 Hz	5 Hz	5 Hz	Operating system error • Switch ASM off/on
OFF	OFF	1 flash every 2 s	OFF	1 flash every 2 s	ASM has booted and is waiting for a RESET (init_run) from the user.

8.5.4 Configuration

Centralized configuration with SIMATIC S7-300

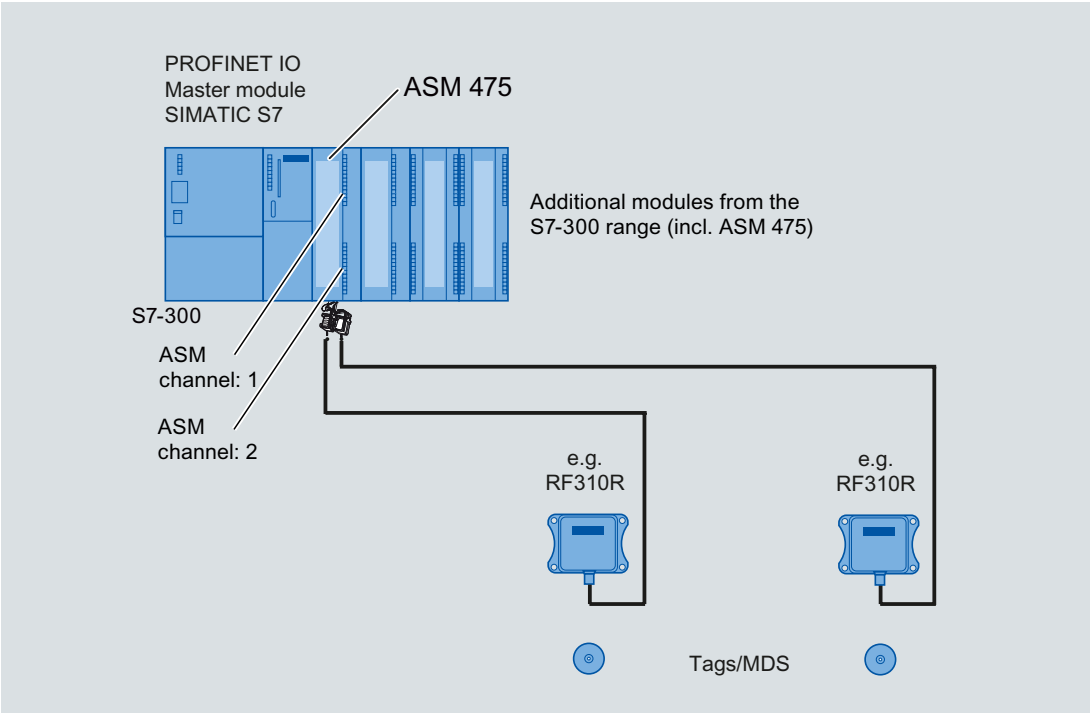

Figure 8-19 Configuration of ASM 475 central

Distributed configuration with ET200M

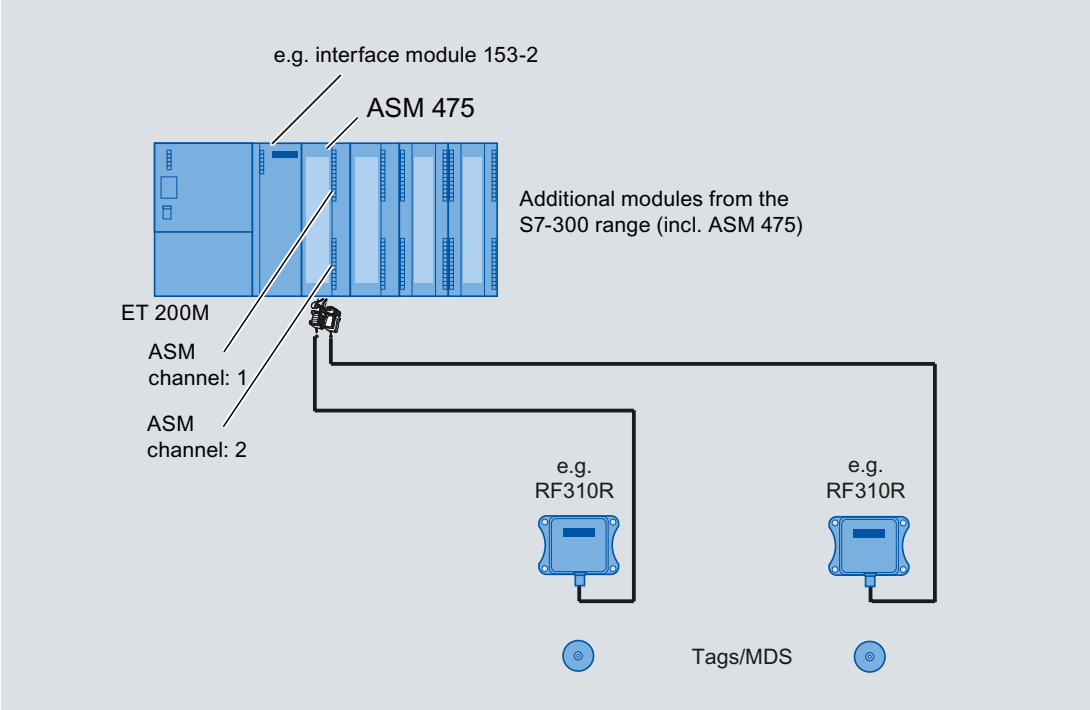

Figure 8-20 Configuration of ASM 475 distributed

Reader connection system

The connecting cable has a length of 2 m (standard) and 5 m. Extensions up to 1000 m are possible with the 6GT2891-0F plug-in cables.

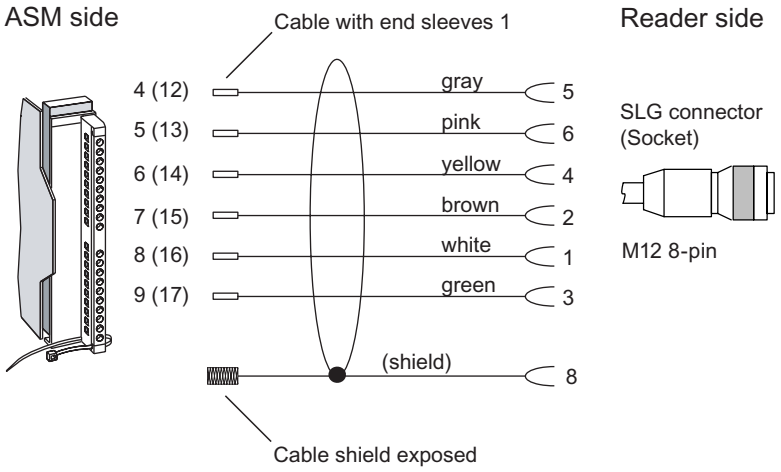

[1] 6GT2891-0E... with straight SLG connector (standard)

Figure 8-21 Installation of connecting cable between ASM 475 and RF300 reader with RS 422

Cable installation

Signal	Pin on M12 connector	Cable	Labeling
24 V DC	1	white	1 Reader 2 8 -16
TX -	2	brown	1 Reader 2 7-15
GND	3	Green	1 Reader 2 9-17
TX +	4	Yellow	1 Reader 2 6-14
RX +	5	Gray	1 Reader 2 4-12
RX -	6	Pink	1 Reader 2 5-13
Shield	8 + terminal piece	-	

Cable assignment for connection of an RF300 reader to ASM 475

8.5.5 Technical data

Table 8- 11 Technical data for ASM 475

Serial interface for SIMATIC S7-300 or ET200M	I/O bus; cyclic and acyclic services
Communication	2 words cyclic/238 bytes acyclic
Command buffer in ASM 475	70 x 238 bytes per RF310R reader
Serial interface to the reader	
Connector	Via screw-type terminal on front connector The front connector is not included in the scope of supply.
Max. cable length	Pre-assembled cables = 2 m, 5 m, (up to 1000 m on request)
Readers that can be connected	2 x RF3xxR reader with RS422 parallel mode
Software functions	
Programming	Depending on the PROFIBUS DP master
Function blocks for SIMATIC S7	FC 45; FB 45; FC 55
Transponder addressing	Direct access via addresses
Commands	Initialize transponder, read data from transponder, write data to transponder
Multitag mode	No
S7 data structures via UDTs	Yes
Power supply	
Rated value	24 V DC
Permissible range	20.4 V to 28.8 V DC
Current consumption	
Without reader for U = 24 V DC, max.	350 mA
With reader connected, max.	500 mA, per connected reader
Power dissipation of the module, typ.	2 Watts
Current consumption from I/O bus, max.	80 mA
Electrical isolation between S7-300 and RF300	Yes
Fuse 24 V for the reader	Yes, electronic
Ambient temperature	
During operation Horizontal installation of SIMATIC Vertical installation of SIMATIC	 0 to +60 °C 0 to +40 °C
Transport and storage	-40 to +70 °C
Dimensions (W x H x D) in mm	40 x 125 x 120
Weight, approx.	0.2 kg

8.6 RF170C

Configured with RF170C

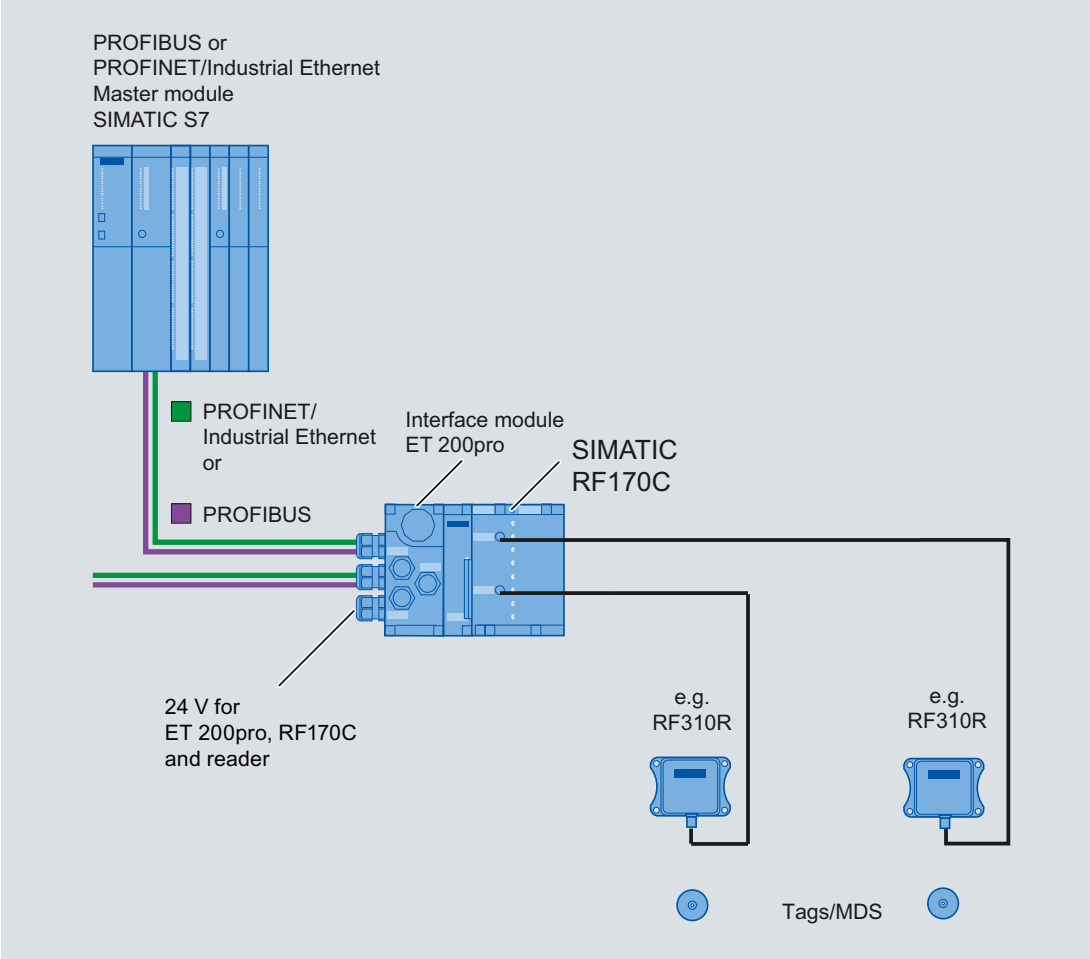

Figure 8-22 Configuration of RF170C

For more detailed information, refer to SIMATIC RF170C Operating Instructions (http://support.automation.siemens.com/WW/view/en/32622825).

8.7 RF180C

Configured with RF180C

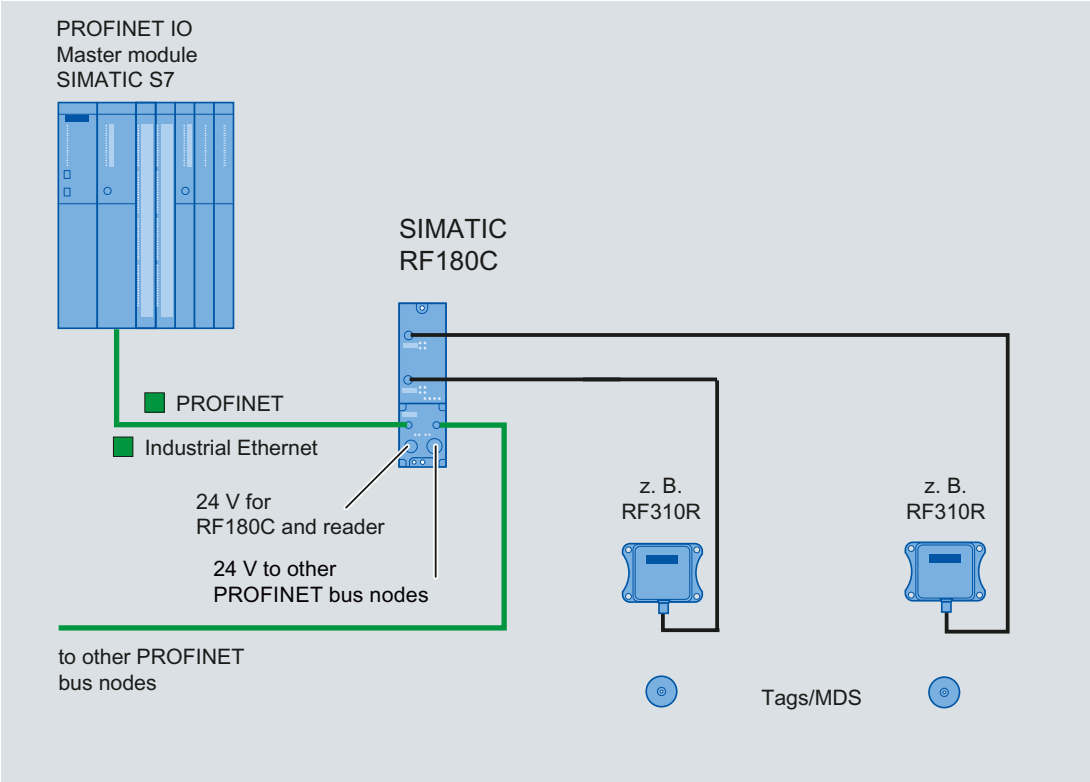

Figure 8-23 Configuration of RF180C

For more detailed information, refer to SIMATIC RF180C Operating Instructions (http://support.automation.siemens.com/WW/view/en/30012157).

8.8 8xIQ-Sense

8.8.1 Features

Field of application

The 8xIQ-Sense module is the link between the RF310R with 8xIQ-Sense interface and SIEMENS S7-300 and functions in the same manner as the communication module (interface module). It can be operated centrally in an S7-300 or decentrally in an ET200M.

Figure 8-24 8xIQ-Sense interface module

8.8.2 Ordering data

Table 8- 12 Ordering data for 8xIQ-Sense and accessories

	Order number
• IQ-Sense SM338 for S7-300 and ET200M for the connection of up to 8xIQ-Sense sensors • Optical sensors, ultrasonic sensors and RF identification systems can be connected.	6ES7 3387XF000AB0

Table 8- 13 Ordering data for 8xIQ-Sense accessories

	Order number
M12 cable plug, 4-pole, with 5 m black PUR cable, 4 x 0.34 mm^2	3RX8000-0CB42-1AF0
M12 cable plug, 4-pole, with 10 m black PUR cable, 4 x 0.34 mm^2	3RX8000-0CB42-1AL0

8.8.3 Indicators

Status displays

The 8xIQ-Sense module has the following LEDs:
A green LED, which has no function for RFID devices, and a red SF LED (system fault LED), which indicates the diagnostic state of the module.

	LEDs	Labeling	LED status	Meaning
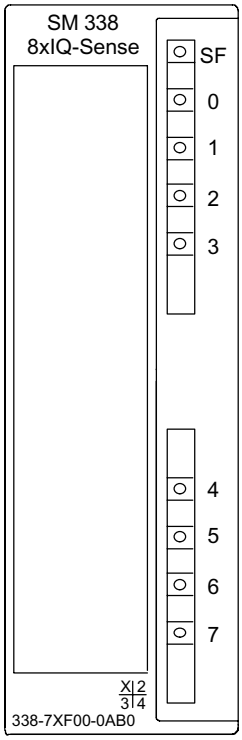	Green LED per channel	0…7	Has no function here	
	Red	SF	Illuminated	Module fault, sensor fault, active teach-in operation, external auxiliary voltage missing
			Not illuminated	No fault or no active teach-in operation

8.8.4 Configuration

Centralized configuration with SIMATIC S7-300

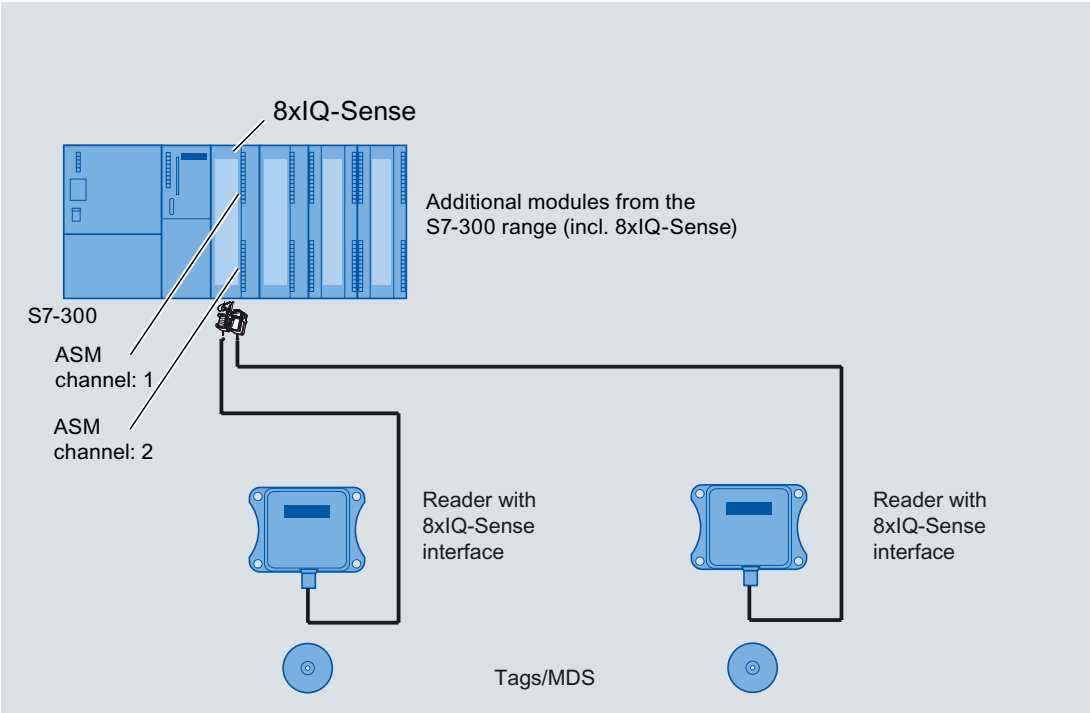

Figure 8-25 Configuration of 8xIQ-Sense central

Distributed configuration with ET 200M

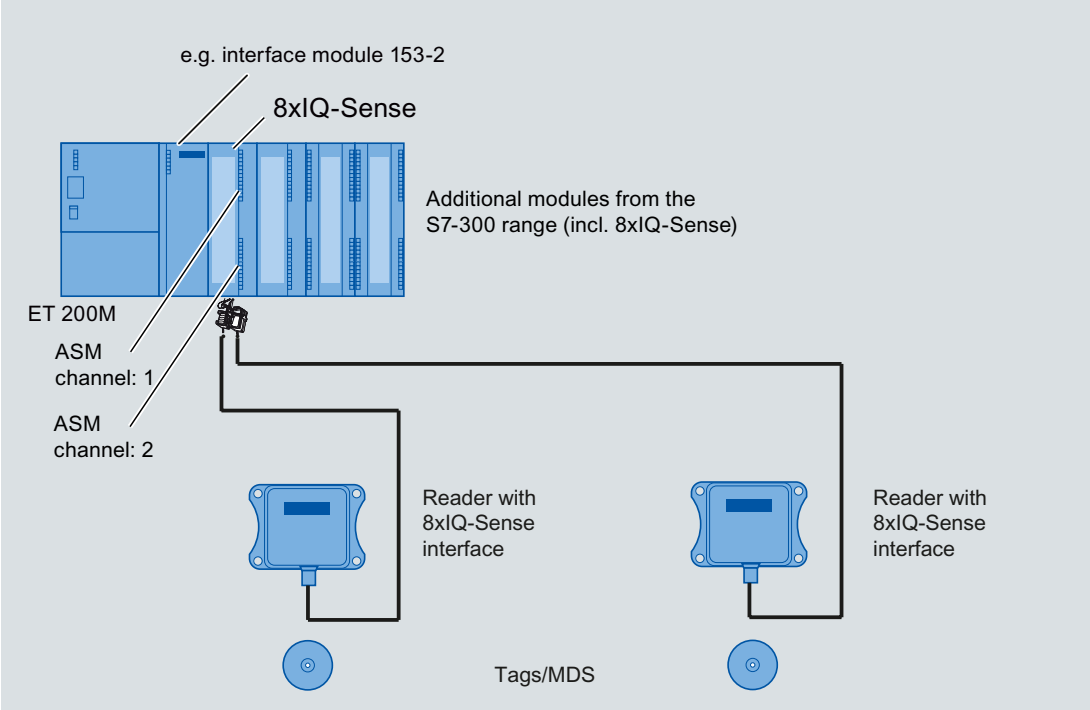

Figure 8-26 Configuration of 8xIQ-Sense distributed

Table 8- 14 Pin assignment of RF310R with IQ-Sense interface

Pin	Pin, device end, 4-pin M12	Assignment
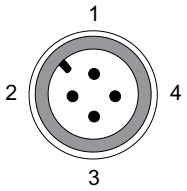	1	IQ-Sense
	2	Not used
	3	IQ-Sense
	4	Not used

Configuration of connecting cable from 8xIQ-Sense to RF310R

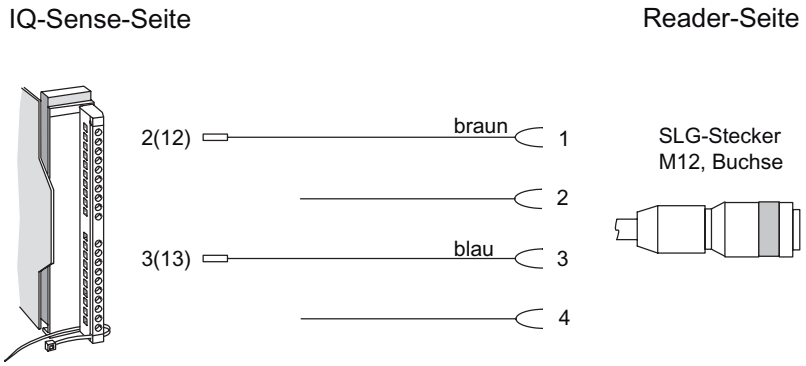

Figure 8-27 Cable and pin assignment of RF300 with IQ-Sense

8.8.5 Addressing

The address range of the 8xIQ-Sense module is 16 bytes I/O.

This is independent of the choice of channel profiles on the connected device

(i.e. the IQ profile IDs in HW Config).

Access to memory areas

A direct association exists between the number of the channel to which the IQ-Sense device is connected (terminal) and the input and output data area of the module. Based on the address range, the following addresses can be used to access the memory areas:

Address = module initial address + (channel no. x 2)

Example

Module initial address = 280

I/O address for channel 3: 286

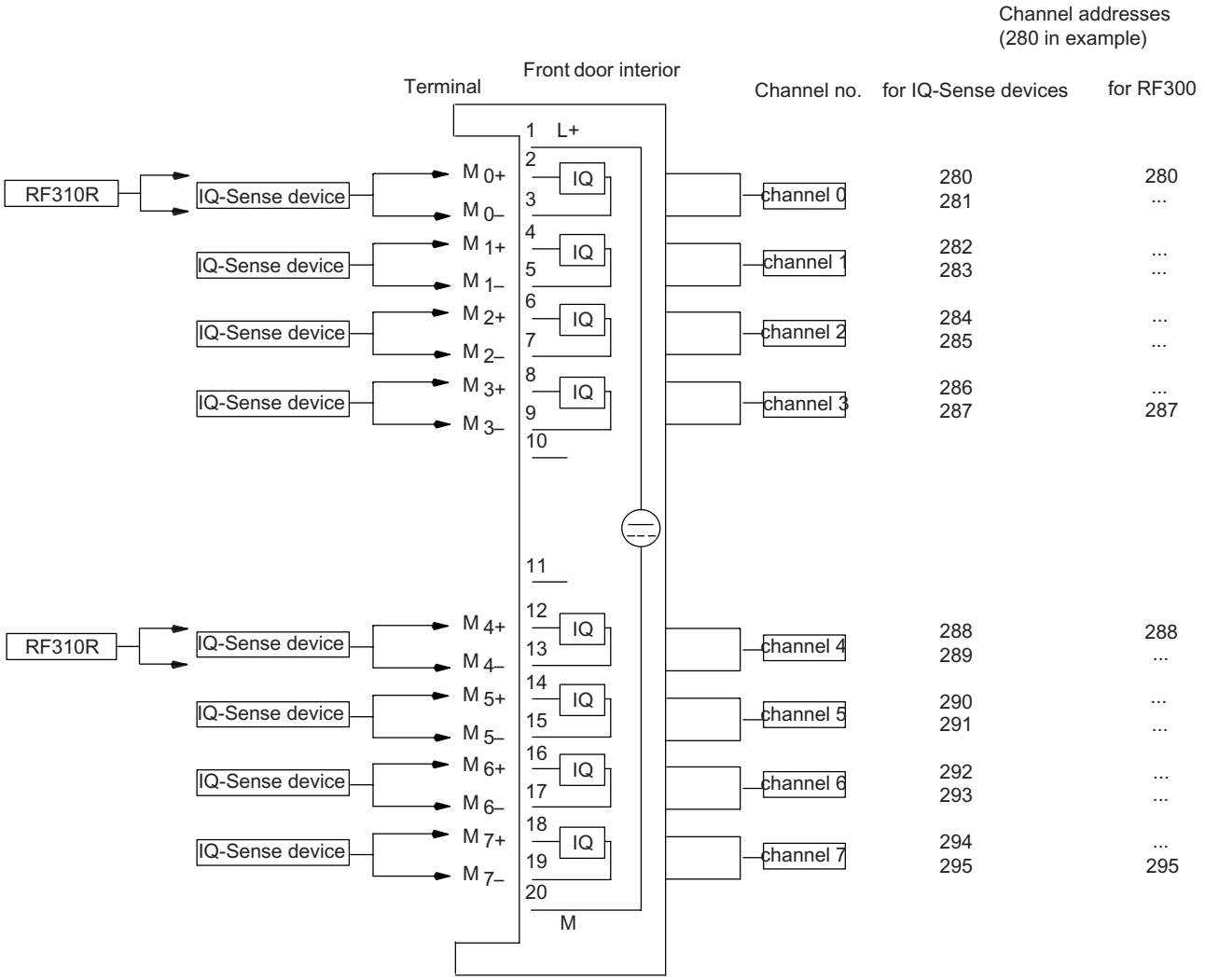

Figure 8-28 8xIQ-Sense module: Assignment of terminal pair to memory area

Note

A maximum of two read/write devices can be operated!

Each read/write device uses channel numbers 0 to 3 or 4 to 7.

8.8.6 Technical data

Voltages and currents	
Rated supply voltage	24 V DC
Reverse polarity protection	yes
Galvanic isolation	
• Between the channels	no
• Between channels and backplane bus	yes
Permissible potential difference	
Between different circuits	75 V DC / 60 V AC
Insulation tested at	500 V DC
Current input	
• from the backplane bus	120 mA typical
• from L+ power supply	500 mA max.
Module power loss	2.5 W typical
Module-specific data	
Number of channels	8
Channels for RFID systems	2
Cable length, unshielded	50 m max.
Dimensions and weight	
Dimensions w x h x d (mm)	40 x 125 x 120
Weight	Approx. 235 g

System diagnostics 9

9.1 Error codes

Error codes of the RF300 readers

Flashing of red LED on reader	Error code (hexa-decimal)	Description
00	00	no error
02	01	Presence error, possible causes: • The active command was not carried out completely • The tag has left the field while the command is being processed • Communication fault between reader and tag
05	05	Parameterization error, possible causes: • Unknown command • Incorrect parameter • Function not allowed
06	06	Air interface faulty
12	0C	The tag memory cannot be written, possible causes: • Hardware fault (memory faulty) • Memory write-protected (corresponding OTP area has already been written)
13	0D	Error in the specified memory address (access attempted to non-existent or non-accessible memory areas).
19	13	Buffer overflow: Insufficient buffer available in the reader for saving the command
20	14	Major system fault (hardware fault)
21	15	Parameter assignment error: faulty parameter in RESET command
25	19	Previous command is still active
28	1C	Antenna is already switched off/Antenna is already switched on
30	1E	Incorrect number of characters in frame
31	1F	Running command cancelled by "RESET" command

9.2 Diagnostics functions

9.2.1 Overview

Extended diagnostic functions with SIMATIC RF300

With SIMATIC RF300, extended diagnostic functions are available which simplify commissioning and maintenance.

These diagnostics data are accessed using the SIMATIC function blocks via the SLG STATUS and MDS STATUS commands. These two commands can each be called in various modes (subcommands) for which corresponding data structures (UDTs) are defined.

Table 9- 1 In RF300 mode

Command	Mode (subcommand)	Meaning
SLG status	01	Hardware and firmware configuration, parameterization status
	06	Communication error counter, current command status
MDS status	01	Serial number of the tag (UID), memory configuration EEPROM write-protection status
	02	Serial number of the tag (UID), HF field strength value, communication error counter, presence counter (duration)

Overview of the diagnostic functions

Table 9- 2 In ISO mode

Command	Mode (subcommand)	Meaning
SLG status	01	Hardware and firmware configuration, parameterization status
MDS status	03	Serial number of the tag (UID), recognized tag type in the field (number = tag - type, see reset parameter "ftim"), memory configuration, write protect status (OTP), size and number of blocks in the user memory

9.2.2 Reader diagnostics with SLG STATUS

The SLG STATUS command can be used to scan the status and diagnostics data of the reader.

SLG STATUS (mode 01), UDT110

HW	ASCII	Type of hardware (31 to 38 hex)	
HW-V	Binary value	HW version 0 to FF hex 0 to FF hex	 = Version (high byte): Unused = Version (low byte)
Url-V	Binary value	Version of loader 0 to FF hex 0 to FF hex	 = Version (high byte) = Version (low byte)
FW	ASCII format	Type of firmware	
FW-V	Binary value	Firmware version 0 to FF hex 0 to FF hex	 = Version (high byte) = Version (low byte)
TR	Binary value	Type of driver	"1" = 3964R
TR-V	Binary value	Version of driver 0 to FF hex 0 to FF hex	 = Version (high byte) = Version (low byte)
SS	Binary value	RS232 / RS422 01 hex	 = RS422
Baud	Binary value	Baud rate 01 hex 03 hex 05 hex	 = 19.2 Kbaud = 57.6 Kbaud = 115,2 Kbaud
dili	Binary value	This variable is only provided for the RF380R. This gives the user the capability of checking the actual output power that is set, i.e. an incorrect value in the parameter "dili" of the RESET message frame would lead to the default setting of "05", which would be displayed in the read/write device status.	
		The following values are possible:	Meaning
		02 hex	0.5 W
		03 hex	0.75 W
		04 hex	1,0
		05 hex	1.25 W (default)
		06 hex	1.5 W
		07 hex	1.75 W
		08 hex	2.0 W

mtag	Binary value	Number of MDSes (Multitag/Bulk) that can be processed in the antenna field	= 1 with single-tag mode (param = 0x05, 0x25)
ftim	Binary value	00 hex 01 hex 03 hex 04 hex 05 hex 06 hex 07 hex	RF300 transponder ISO transponder (for ISO mixed operation) ISO my-d (Infineon SRF 55V10P) ISO (Fujitsu MB89R118) ISO I-Code SLI (Philips SL2 ICS20) Tag-it HFI (Texas Instruments) ISO (ST LRI2K)
ANT	Binary value	Status of antenna 01 hex 02 hex	 = Antenna On = Antenna Off
ANW	Binary value	Presence mode 0 01 hex	 = Operation without presence = Operation with presence (see ANW-MELD signal)

SLG STATUS (mode 06), UDT280

FZP	Binary value	0 … 255	= Error counter, passive (errors during idle time)
ABZ	Binary value	0 … 255	= Abort counter
CFZ	Binary value	0 … 255	= Code error counter
SFZ	Binary value	0 … 255	= Signature error counter
CRCFZ	Binary value	0 … 255	= CRC error counter
BSTAT	Binary value	0 … 255	= Current command status
ASMFZ	Binary value	0 … 255	= Interface problems to host (ASM/PC) parity, BCC, frame error

Note

All counter values are reset after reading (= SLG STATUS command executed).

Explanations:

- "FZP": Counts interference pulses when communication is not taking place with a transponder. (e.g. EMC interference caused by contactors, motors, etc.). Counter values can also be generated when a tag is located at the edge of the field even when there is no external interference.
- "ABZ", "CFZ", "SFZ" and "CRCFZ" are protocol error counters that can be generated during reader/tag communication. This can be caused by unsuitable reader/tag positioning (e.g. tag on field boundary, several data carriers in the field) or external electromagnetic interference.

To ensure clear diagnosis of the quality of communication, it is recommended that an SLG STATUS command (mode 06) is executed following receipt of the presence command to reset the error counter.

The protocol error counters are not mutually independent. If a code error (CFZ) occurs, this will cause a secondary signature (SFZ) or CRC (CRCFZ) error.

- "BSTAT" is the status for the most recently executed command. A value other than 0 means that the previous command was repeated by the reader due to faults (see above).
- "ASMFZ" signals line-conducted communication interference between the communication module (ASM) and the reader. Faults of this type can be caused by contact problems on the connector or the cable connection.

9.2.3 Transponder diagnostics with MDS STATUS

The MDS STATUS command can be used to scan the status and diagnostics data of the transponder that is located within the antenna field.

MDS STATUS (mode 01), UDT260

UID	Binary value	0 … 2^{64} -1	= b0-31: 4 byte TAG ID, b32-63: 0
MDS type	Binary value	0x01 0x02 0x03	= Transponder without FRAM = Transponder with FRAM 8 KB = Transponder with FRAM 32 KB
Lock STATUS	Binary value	0 … 255	= Content of lock-bit register (EEPROM addr. 0xFF18)

MDS STATUS (mode 02), UDT270

LFD	Binary value	0 … 255	= Value for field strength
FZP	Binary value	0 … 255	= Error counter (passive) → errors during idle time
FZA	Binary value	0 … 255	= Error counter (active)
ANWZ	Binary value	0 … 255	= Presence counter

Note

All counter values are reset when the tag exits the field or when the antenna is switched off.

Notes:

- "LFD" is a value for the field strength that is determined in the transponder. The lower the value, the higher the field strength. A setpoint of **< 28 hex** signals reliable data transfer.
- "FZP" counts fault pulses when communication with a transponder is not taking place (e.g. electromagnetic interference caused by contactors, motors, etc.). Counter values can also be generated when a transponder is located at the edge of the field even when there is no external interference.
- "FZA" counts errors that can occur during reader-to-transponder communication. This can be caused by unsuitable reader/transponder positioning (e.g. transponder on field boundary, several data carriers in the field) or external electromagnetic interference.
- "ANWZ" is the value for the time that the transponder remains in the field before the MDS STATUS command (mode 02) is executed. A time step is 10 ms. The maximum time that can be recorded is therefore 2.5 s.

MDS-STATUS for ISO mode (mode 03) UDT230

Table 9- 3 MDS STATUS for ISO mode

UID	Binary value	$0...2^{64}-1$	8 byte TAG-ID, MSB first
MDS type	Binary value	0...255	Tag type recognized in the field, number like that in reset parameter ftim
IC_version	Binary value	0...255	Chip version (for my-d = 00h)
Size	Binary value	0...65535	Memory size in bytes
lock_state	Binary value	0...255	Lock status, OTP information: per block (4 x 4 bytes or 2 x 8 bytes) one bit (bit = 1: block is locked)
block_size	Binary value	0...255	Block size of the transponder
nr_of_blocks	Binary value	0...255	Number of blocks

Table 9- 4 MDS STATUS for ISO mode - Explanations

MDS type	In this parameter, the tag type that is actually processed is reported to the user, e.g. • 03 = ISO my-d (Infineon SRF 55V10P) • 04 = ISO (Fujitsu MB89R118) • 05 = ISO I Code SLI (Philips SL2 ICS20) • 06 = ISO Tag-it HFI (Texas Instruments) • 07 = ISO (ST LRI2K)
Size	Depending on tag type, e.g. my-d: 992 bytes
lock_state	e.g. • 01 = Block 1 of address FF80 - FF83 is locked or • 03 = Block 1 and 2 of address FF80 - FF87 are locked, e.g. for the Philips SL2 ICS20 (MDS D124, D160 or D100). This chip provides a usable memory (112 bytes EEPROM) from address 0000 - 006F (total OTP area 0060 - 006F). In this memory, the locked area corresponds to the addresses 0060 - 0063 or 0060 - 0067
block_size	Depending on tag type, e.g. my-d: 4 bytes
nr_of_blocks	Depending on tag type, e.g. my-d: 248

Appendix

A

A.1 Certificates and approvals

Certificate	Description
CE	CE Approval to R&TTE

A.1.1 Certificates and Approvals

Notes on CE marking

The following applies to the system described in this documentation:
The CE marking on a device is indicative of the corresponding approval:

DIN ISO 9001 certificate

The quality assurance system for the entire product process (development, production, and marketing) at Siemens fulfills the requirements of ISO 9001 (corresponds to EN29001: 1987).

This has been certified by DQS (the German society for the certification of quality management systems).

EQ-Net certificate no.: 1323-01

Certifications for the United States, Canada, and Australia

Safety

One of the following markings on a device is indicative of the corresponding approval:	
	Underwriters Laboratories (UL) per UL 60950 (I.T.E) or per UL 508 (IND.CONT.EQ)
C	Underwriters Laboratories (UL) according to Canadian standard C22.2 No. 60950 (I.T.E) or C22.2 No. 142 (IND.CONT.EQ)
C US	Underwriters Laboratories (UL) according to standard UL 60950, Report E11 5352 and Canadian standard C22.2 No. 60950 (I.T.E) or UL508 and C22.2 No. 142 (IND.CONT.EQ)
	UL recognition mark
	Canadian Standard Association (CSA) per Standard C22.2. No. 60950 (LR 81690) or per C22.2 No. 142 (LR 63533)
NRTL	Canadian Standard Association (CSA) per American Standard UL 60950 (LR 81690) or per UL 508 (LR 63533)

EMC

USA	
Federal Communications Commission Radio Frequency Interference Statement	This equipment has been tested and found to comply with the limits for a Class A digital device, pursuant to Part 15 of the FCC Rules. These limits are designed to provide reasonable protection against harmful interference when the equipment is operated in a commercial environment. This equipment generates, uses, and can radiate radio frequency energy and, if not installed and used in accordance with the instruction manual, may cause harmful interference to radio communications. Operation of this equipment in a residential area is likely to cause harmful interference in which case the user will be required to correct the interference at his own expense.
Shielded Cables	Shielded cables must be used with this equipment to maintain compliance with FCC regulations.
Modifications	Changes or modifications not expressly approved by the manufacturer could void the user's authority to operate the equipment.
Conditions of Operations	This device complies with Part 15 of the FCC Rules. Operation is subject to the following two conditions: (1) this device may not cause harmful interference, and (2) this device must accept any interference received, including interference that may cause undesired operation.

CANADA	
Canadian Notice	This Class B digital apparatus complies with Canadian ICES-003.
Avis Canadien	Cet appareil numérique de la classe b est conforme à la norme NMB-003 du Canada.

AUSTRALIA	
	This product meets the requirements of the AS/NZS 3548 Norm.

A.2 Accessories

CD "RFID Systems Software & Documentation"

The CD contains:

- FB/FC for SIMATIC, 3964R
- Driver for DOS/Windows 95/NT/2000/XP
- C libraries
- PC demonstration program
- RFID documentation in PDF format, especially RFID system manuals, programming instructions and operating instructions

The "RFID Systems Software & Documentation" CD has a user-friendly interface based on HTML. After Start.exe has been called, a window for selecting the RFID system appears:

- RF300
- RF600
- RF-MANAGER
- MOBY
- CM/ASM

After selecting the RFID system, you can navigate to the required information.

Product	Order number
CD "RFID Systems Software & Documentation"	6GT2 080-2AA10

Note

Notes on "RFID system software" and licensing

When purchasing a communication module or an interface module, no software or documentation is supplied. The "RFID Systems Software & Documentation" CD-ROM contains all available FBs/FCs for the SIMATIC, C libraries, demo programs, etc. and needs to be ordered separately. In addition, the CD-ROM contains the complete RFID documentation (German, English and French) in PDF format.

The purchase of a communication module or an interface module includes a payment for the use of the software, including documentation, on the "RFID Systems Software & Documentation" CD-ROM and the purchaser acquires the right to make copies (copy license) insofar as they are required as part of the customer-specific application or development for the plant.

The enclosed contract pertaining to the use of software products against a one-off payment shall apply in addition.

A.3 Connecting cable

In the following chapter, you will find an overview of the connecting cables between the readers and communication modules or PCs.

A.3.1 Reader RF3xxR (RS422) with ASM 452/ASM 473

A reader always occupies two M12 connection sockets on the ASM 452/ASM 473
A pre-assembled cable therefore ensures easy connection of the reader (see figure below).
The connecting cable has a length of 2 m (standard) and 5 m. Extensions up to 1000 m are possible with the 6GT2891-0F plug-in cables.

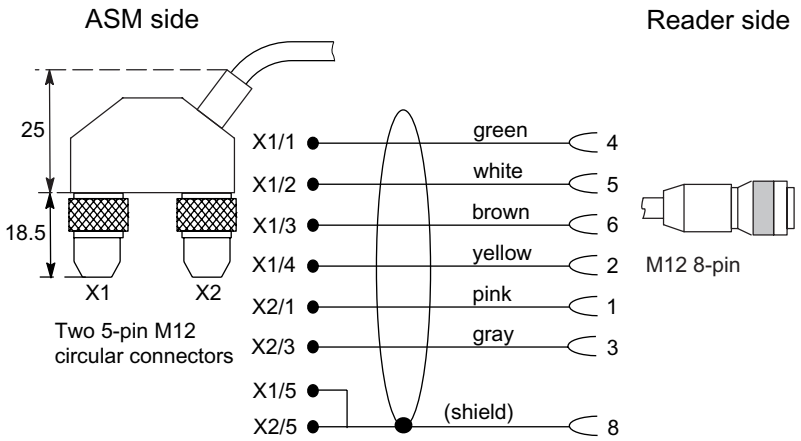

Figure A-1 Connecting cable between ASM 452/473 and RF3xxR reader with RS422 (6GT2891-1CH20)

A.3.2 Reader RF3xxR (RS422) with ASM 456/RF170C/RF180C

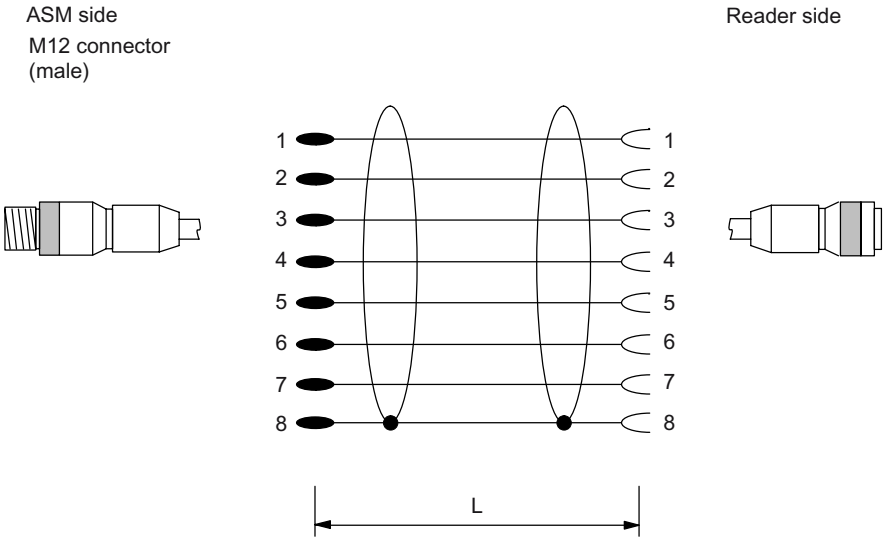

Figure A-2 Connecting cable between ASM 456, RF170C, RF180C and reader RF3xxR (RS422)

Table A- 1 Ordering data

Length L	Order number
2 m	6GT2891-0FH20
5 m	6GT2891-0FH50
10 m	6GT2891-0FN10
20 m	6GT2891-0FN20
50 m	6GT2891-0FN50

A.3.3 Reader RF3xxR (RS422) with ASM 475

Reader connection system

The connecting cable has a length of 2 m (standard) and 5 m. Extensions up to 1000 m are possible with the 6GT2891-0F plug-in cables.

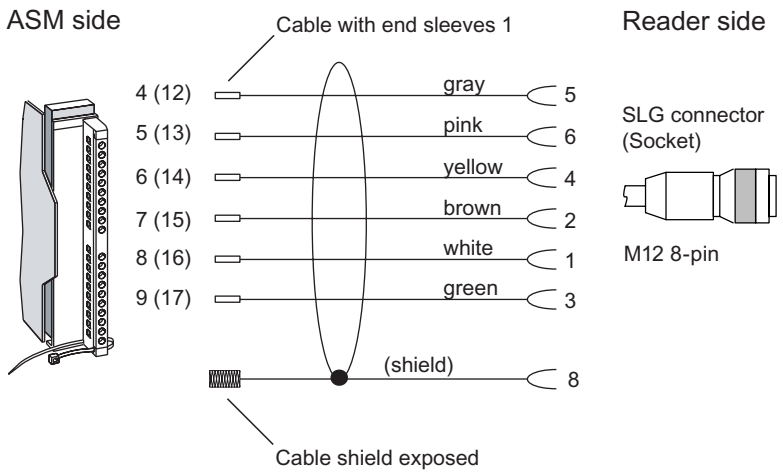

[1] 6GT2891-0E... with straight SLG connector (standard)

Figure A-3 Installation of connecting cable between ASM 475 and RF300 reader with RS 422

A.3.4 RF310R and IQ-Sense

The connecting cable is available in lengths of 5 m (standard) and 10 m.

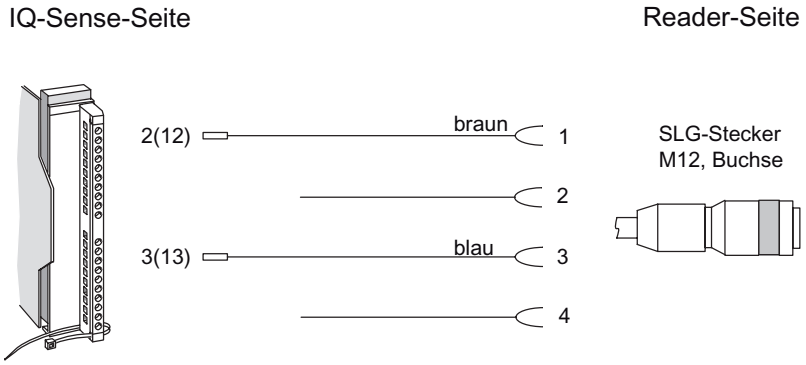

Figure A-4 Configuration of connecting cable from 8xIQ-Sense to RF310R

Length	Order number
5 m	3RX8000-0CB42-1AF0
10 m	3RX8000-0CB42-1AL0

A.3.5 Reader RF380R (RS232) - PC

The connecting cable (6GT2891-OKH50) is 5 m long

Special feature of the cable: additional branch for the power supply.

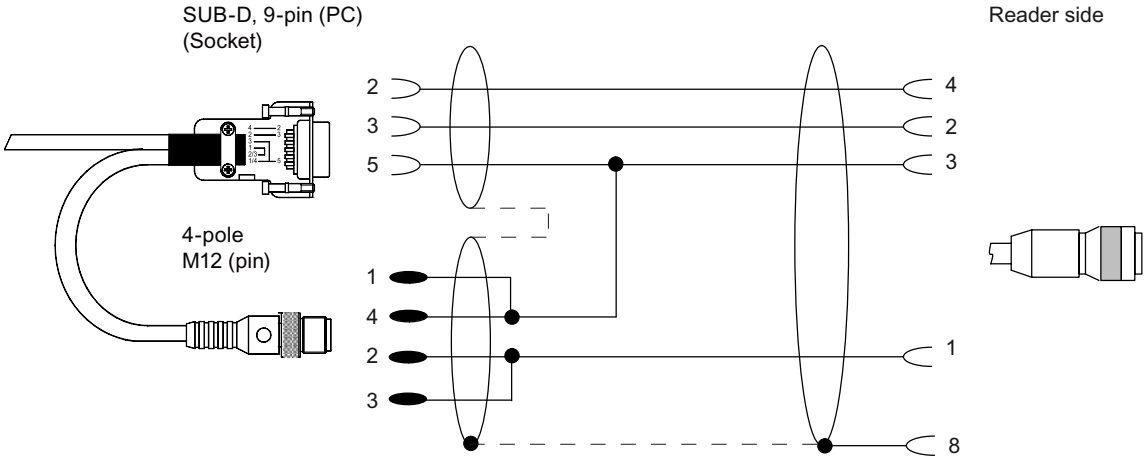

Figure A-5 Connecting cable RF380R (RS232) to the PC

Suitable power supply unit: e.g. wide-range power supply unit

Table A- 2 Ordering data for wide-range power supply unit

Wide-range power supply unit for SIMATIC RF-systems (100 - 240 V AC / 24 V DC / 3 A) with 2 m connecting cable with country-specific plug	EU: 6GT2898-0AA00 UK: 6GT2898-0AA10 US: 6GT2898-0AA20

A.4 Ordering data

RF300 components

Table A- 3 RF300 reader

Readers	Description	Order number
RF310R (IQ-Sense)	• With IQ-Sense interface • IP67 • Operating temperature: -25 °C to +70 °C • Dimensions: 55 x 75 x 30 (L x W x H, in mm) • with integrated antenna	6GT2801-0AA00
RF310R (RS422)	• With RS422 interface (3964R) • IP67 • Operating temperature: -25 °C to +70 °C • Dimensions: 55 x 75 x 30 (L x W x H, in mm) • with integrated antenna • ISO 15693 compatible	6GT2801-1AB10
RF340R	• With RS422 interface (3964R) • IP67 • Operating temperature -25 °C … +70 °C • Dimensions 75 x 91 x 41 (L x W x H in mm) • with integrated antenna	6GT2801-2AA10
RF350R	• With RS422 interface (3964R) • IP65 • Operating temperature: -25 °C … +70 °C • Dimensions: 75 x 96 x 41 (L x W x H, in mm) • For pluggable antennas ANT 1, ANT 18, ANT 30	6GT2801-4AA10
RF380R	• With RS422 interface (3964R) • IP67 • Operating temperature: -25 °C … +70 °C • Dimensions: 160 x 96 x 40 (L x W x H, in mm) • with integrated antenna • ISO 15693 compatible	6GT2801-3AB10

Table A- 4 Antennae

Antenna	Description	Order number
ANT 1	• IP67 • Operating temperature: -25 °C to +70 °C • Dimensions: 75 x 75 x 20 (L x W x H, in mm)	6GT2398-1CB00
ANT 18	• IP67 (front) • Operating temperature -25 °C to +70 °C • Dimensions: M18 x 50 (Ø x L in mm)	6GT2398-1CA00
ANT 30	• IP67 (front) • Operating temperature -25 °C to +70 °C • Dimensions: M30 x 58 (Ø x L in mm)	6GT2398-1CD00

Table A- 5 RF300 transponder

RF300 transponder	Description	Order number
RF320T	• IP67 • Memory size: 20 byte EEPROM • Operating temperature: -25 °C to +85 °C • Dimensions: 27 mm x 4 mm (Ø x H in mm)	6GT2800-1CA00
RF340T	• IP68 • Memory size: 8 KB FRAM • Operating temperature: -25 °C to +85 °C • Dimensions: 48 x 25 x 15 (L x W x H, in mm)	6GT2800-4BB00
RF350T	• IP68 • Memory size: 32 KB FRAM (read/write) and 4 byte EEPROM (read only) • Operating temperature: -25 °C … +85 °C • Dimensions: 50 x 50 x 20 (L x W x H, in mm)	6GT2800-5BD00
RF360T	• IP67 • Memory size: 8 KB FRAM (read/write) and 4 byte EEPROM (read only) • Operating temperature: -25 °C … +75 °C • Dimensions: 85.8 x 54.8 x 2.5 (L x W x H, in mm)	6GT2800-4AC00
RF370T (32 KB FRAM)	• IP68 • Memory size: 32 KB FRAM • Operating temperature: -25 to +85 °C • Dimensions: 75 x 75 x 40 (L x W x H, in mm)	6GT2800-5BE00
RF370T (64 KB FRAM)	• IP68 • Memory size: 64 KB FRAM • Operating temperature: -25 °C to +85 °C • Dimensions: 75 x 75 x 40 (L x W x H, in mm)	6GT2800-6BE00
RF380T	• IP68 • Memory size 32 KB FRAM (read/write) and 4 byte EEPROM • Operating temperature -25 … +200 °C (cyclic) • Dimensions: 114 x 83 (Ø x H in mm)	6GT2800-5DA00

Table A- 6 ISO transponder

ISO transponder	Description	Order number
MDS D100	• IP68 • Memory size: 112 byte EEPROM • Operating temperature: -25 … +80 °C • Dimensions: 85.6 x 54 x 0.9 (L x W x H, in mm) • ISO card	6GT2600-0AD10
MDS D124	• IP67 • Memory size: 112 byte EEPROM user memory • Operating temperature: -25 … +125 °C • Dimensions: 27 mm x 4 mm (Ø x H in mm)	6GT2600-0AC00
MDS D139	• IP68 • Memory size: 112-byte user memory • Operating temperature: up to +200 °C/+220 °C [heat-resistant (r/w)] • Dimensions: 85 x 15 (Ø x H in mm)	6GT2600-0AA10
MDS D160	• IP68 (24 hours, 2 m, +20 °C) • Memory size: 112 byte user memory • Operating temperature: -25 °C...+70 °C • Dimensions: 16 x 3 ±0.1 (Ø x H in mm) • Laundry tag for cyclical applications (r/w)	6GT2600-0AB10
MDS D324	• IP67 • Memory size: 992 byte EEPROM user memory • Operating temperature: -25 °C...+125 °C • Dimensions: 27 x 4 (Ø x H in mm)	6GT2600-3AC00

Table A- 7 Communication modules/interface modules

ASM/ communication module	Description	Order number
ASM 452	• for PROFIBUS DP-V1, • 1x RF3xxR with RS422 interface • without connector for 24 V DC and PROFIBUS	6GT2002-0EB20
ASM 456	• for PROFIBUS DP-V1 • For connecting as many as 2 readers	6GT2002-0ED00
ASM 473	1x RF3xxR reader with RS422 can be connected	6GT2002-0HA10
ASM 475	• For SIMATIC S7 • 2 x readers RF3xxR with RS422 can be connected in parallel without a front connector	6GT2002-0GA10
RF170C	Communication module, 1 unit	6GT2002-0HD00
	Connection module, 1 unit	6GT2002-1HD00
RF180C	RF180C communication module max. 2 SLGs or readers can be connected	6GT2002-0JD00
	Connection block M12, 7/8" PN	6GT2002-1JD00
	Push-pull connection block, RJ45	6GT2002-2JD00
8xIQ-Sense	• IQ-Sense SM338 for S7-300 and ET200M for the connection of up to 8xIQ-Sense sensors • Optical sensors, ultrasonic sensors and RF identification systems can be connected.	6ES7 3387XF000AB0

Accessories

Table A- 8 Accessories for RF300 reader

Readers	Accessories	Order number
RF380R	Connecting cable RS232 to PC	6GT2891-0KH50

Table A- 9 Accessories for RF300 tags

Tag	Accessories	Order number
RF360T	Spacers	6GT2190-0AA00
	Fixing pocket	6GT2190-0AB00
RF380T	Holder (short version)	6GT2090-0QA00
	Holder (long version)	6GT2090-0QA00-0AX3
	Covering hood	6GT2090-0QB00
	Universal holder	6GT2590-0QA00

Table A- 10 Accessories for ISO tags

MDS	Accessories	Order number
MDS D100	Spacers	6GT2190-0AA00
	Fixing pocket	6GT2190-0AB00
	Fixing pocket (cannot be mounted directly on metal)	6GT2390-0AA00
MDS D139	Spacer [85 mm x 30 mm (Ø x H in mm)]	6GT2690-0AA00

Table A- 11 Connecting cable accessory - ASM/communication module to reader

ASM - Reader	Description	Order number
ASM 452/ ASM 473 and reader RF3xxR with RS422	**Length**	
	2 m	6GT2891-1CH20
	5 m	6GT2891-1CH50
ASM 456/RF170C/ RF180C and reader RF3xxR (RS422)	**Length**	
	2 m	6GT2891-0FH20
	5 m	6GT2891-0FH50
	10 m	6GT2891-0FN10
	20 m	6GT2891-0FN20
	50 m	6GT2891-0FN50
ASM 475 and reader RF3xxR (RS422)	**Length**	
	2 m	6GT2891-0EH20
	5 m	6GT2891-0EH50
8xIQ-Sense and RF310R	**Length**	
	5 m	3RX8000-0CB42-1AF0
	10 m	3RX8000-0CB42-1AL0

Table A- 12 RFID accessories, general

RFID accessories, general	Order number
CD "RFID Systems Software & Documentation"	6GT2 080-2AA10
Wide-range power supply unit for SIMATIC RF systems (100 - 240 V AC/24 V DC/3 A) with 2 m plug-in cable with country-specific connector	EU: 6GT2898 0AA00 UK: 6GT2898 0AA10 US: 6GT2898 0AA20

A.5 Service & Support

Contact partner

If you have any further questions on the use of our products, please contact one of our representatives at your local Siemens office.

The addresses are found on the following pages:

- On the Internet (www.siemens.com/automation/partner)
- In Catalog CA 01
- In Catalog FS 10 specially for factory automation sensors

Technical Support

You can access technical support for all IA/DT projects via the following:

- Phone: + 49 (0) 180 5050 222
  (€ 0.14 /min. from the German landline network, deviating mobile communications prices are possible)
- E-mail (mailto:support.automation@siemens.com)
- Internet: Online support request form: (www.siemens.com/automation/support-request)

Service & support for industrial automation and drive technologies

You can find various services on the Support homepage (www.siemens.com/automation/service&support) of IA/DT on the Internet.

There you will find the following information, for example:

- Our newsletter containing up-to-date information on your products.
- Relevant documentation for your application, which you can access via the search function in "Product Support".
- A forum for global information exchange by users and specialists.
- Your local contact for IA/DT on site.
- Information about on-site service, repairs, and spare parts. Much more can be found under "Our service offer".

RFID homepage

For general information about our identification systems, visit RFID homepage (www.siemens.com/simatic-sensors/rf).

Technical documentation on the Internet

A guide to the technical documentation for the various products and systems is available on the Internet:

SIMATIC Guide manuals (www.siemens.com/simatic-tech-doku-portal)

Online catalog and ordering system

The online catalog and the online ordering system can also be found on the A&D Mall homepage. (www.siemens.com/automation/mall)

Training center

We offer appropriate courses to get you started. Please contact your local training center or the central training center in

D-90327 Nuremberg.

Phone: +49 (0) 180 523 56 11
(€ 0.14 /min. from the German landline network, deviating mobile communications prices are possible)

For information about courses, see the SITRAIN homepage (www.sitrain.com).

Glossary

Active surface

Area with minimum field strength containing the transmission window, as well as the areas in which the field strength is no longer sufficient for data exchange.

Automation system (AS)

A programmable logical controller (PLC) of the SIMATIC S7 system, comprising a central controller, a CPU and various I/O modules.

Battery-free data storage unit

Mobile data storage units which operate without batteries. Power is supplied to the data storage unit across an electromagnetic alternating field.

Byte

A group of eight bits forms a byte

CE marking

Communauté Européenne (product mark of the European Union)

Communication modules

Communication modules are used to integrate the MOBY identification systems in SIMATIC or SINUMERIK systems, or to connect them to PROFIBUS, PCs or any other system. Once supplied with the corresponding parameters and data, they handle data communication. They then make the corresponding results and data available. Suitable software blocks (FB/FC for SIMATIC; C libraries for PCs with Windows) ensure easy and fast integration in the application.

Data transmission rate

Unit of measurement for the volume of data transmitted within a unit of time, e.g. bytes/s

Dwell time

The dwell time is the time in which the transponder dwells within the transmission window of a read/write device. The read/write device can exchange data with the transponder during this time.

Dynamic mode

In dynamic mode, the data carrier moves past the read/write device at a traversing rate which depends on the configuration. Various checking mechanisms (listen-in check, CRC, ECC, etc.) ensure error-free data transfer even under extreme environmental conditions. A serial connection (up to 1000 m) is used to connect the read/write device directly to an interface module, PC, or any other system.

Electromagnetic compatibility

Electromagnetic compatibility is the ability of an electrical or electronic device to operate satisfactorily in an electromagnetic environment without affecting or interfering with the environment over and above certain limits.

EMC Directive

Guidelines for electromagnetic compatibility This guideline relates to any electrical or electronic equipment, plant or system containing electric or electronic components.

Equipotential bonding

Potential differences between different parts of a plant can arise due to the different design of the plant components and different voltage levels. It is necessary to compensate for these differences by equipotential bonding: this is done by combining the equipotential bonding conductors of power components and non-power components on a centralized equalizing conductor.

ESD Directive

Directive for handling ESDs.

Frequency hopping

Frequency hopping technique Automatic search for free channels.

In frequency hopping, data packets are transferred between the communication partners on constantly changing carrier frequencies. This makes it possible to react to interference from devices transmitting signals in the same frequency range. If an attempt to send a data packet is unsuccessful, the packet can be transmitted again on a different carrier frequency.

Interface modules (ASM)

See communication modules

IQ-Sense interface

Simple interface on the IQ-Sense module, using a standard design for all types of sensors, enabling integrated data exchange between the sensor and control system.

Limit distance

The limit distance is the maximum clear distance between the upper surface of the read/write device and the transponder, at which the transmission can still function under normal conditions.

L_x

Length of a transmission window in the x direction

L_y

Length of a transmission window in the y direction

M

Centerpoint of a field of a transmission window

Metal-free area

Distance/area which must be maintained between the transponder and metal in order to prevent interference during data transfer between the transponder and read/write device.

Mobile data storage units (MDS)

See transponder

Multi-tag capability

Multi-tag capability means the ability to use several read/write devices which communicate simultaneously with different data carriers.

Programmable logic controller (PLC)

The programmable logic controllers (PLC) of the SIMATIC S5 system consist of a central controller, one or more CPUs, and various other modules (e.g. I/O modules).

Read/write devices (SLG)

See readers

Read/write distance

See transmission distance

Readers

Readers ensure fast, secure data transfer between mobile data storage units and higher-level systems (PLCs, PCs, etc.). The data, energy included, are transmitted inductively across an electromagnetic alternating field or by radio. This principle enables contact-free data transmission, ensures high industrial compatibility and works reliably in the presence of contamination or through non-metallic materials.

RFID systems

SIMATIC RF identification systems control and optimize material flow and production sequences. They identify reliably, quickly and economically, use non-contact data communication technology, and store data directly on the product. They are also resistant to contamination.

Secondary fields

The strength of the secondary fields, which exist in addition to the transmission window, is usually lower than that of the transmission window and depends on the metallic environment. Secondary fields should not be used in configuring.

Static mode

In static mode the transponder is positioned at a fixed distance (maximum: limit distance) exactly above the read/write device.

Tag

See transponder

Telegram cycles

The transfer of a read or write command takes place in three cycles, known as message frame cycles. 1 or 2 bytes of user data can be transferred with each command. The acknowledgement transfer (status or read data) takes place in 3 further cycles.

Transmission distance

Distance between communication module (read/write device) and transponder (mobile data storage unit)

Transmission window

Area in which reliable data exchange between transponder and read/write device is possible due to a particular minimum field strength.

Transponder

An invented word from transmitter and responder. Transponders are used on the product, the product carrier, the object, or its transport or packaging unit, and contain production and manufacturing data, i.e. all application-specific data. They follow the product through assembly lines, transfer and production lines and are used to control material flow.

Because of their wireless design, transponders can be used, if necessary, at individual work locations or manufacturing stations, where their data can be read and updated.

Transponders consist predominantly of logic, FRAM and/or EEPROM.

If a transponder moves into the transmission window of the reader, the necessary power for all of the circuit components is generated and monitored by the power supply unit. The pulse-coded information is prepared in such a way that it can be processed further as pure digital signals. The handling of data, including check routines, is performed by the logic, which also manages the various memories.

Index

8

A

C

D

P

R

S

T

U

W

Get more Information

www.siemens.com/simatic-sensors

SIEMENS AG
Industry Sector
Sensors and Communication
Postfach 4848
90026 NÜRNBERG
DEUTSCHLAND

subject to change
A5E01642529-03

© Siemens AG 2009

www.siemens.com/automation