SCHALTBAU

Connect · Contact · Control

Charging Connectors
LV Series

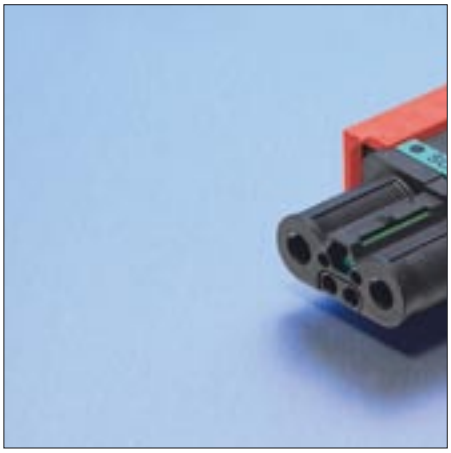

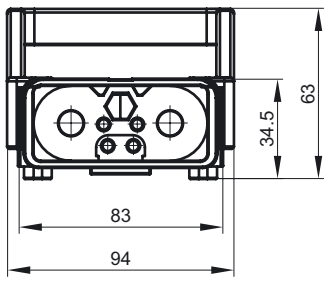

A84.en

LV Series charging connectors

Competence, innovation and decades of experience

Our new LV Series charging connectors represent the consistent further development of our well-established connectors of the LB and LB-L series.

LV Series connectors exceed the requirements of standard EN 1175-1 and meet all current demands of manufacturers and users of modern battery-powered machines and systems, such as materials handling and lifting vehicles, vehicle batteries, battery chargers, and backup systems of uninterruptible power supplies.

The charging connectors are also available with the option, as patented by Schaltbau, for batteries featuring a commercial electrolyte circulation system.
Used with your products, our charging connectors ensure the highest reliability and safety in any application under harsh environmental conditions. Resistant to shock and vibration as well as to the effects of dust, most acids, alkalis and vapours, our charging connectors are designed for daily use and have stood the test millionfold. A wide range of accessories is available.

Features

- **Higher ampacity of main contacts**
  Due to the innovative design of the socket contacts there is an increased contact area which allows for 60 to 75 per cent higher amperage, reduced temperature rise of contacts, and low contact resistance during continued operation. This results in high contact forces that do not deteriorate over time as well as less wear and tear when mating and unmating.

LV Series: Benefits of innovative design of main contacts

- **Improved resistance to acids and extremes of temperature**
  The housing material, including the handle, is a new thermoplastic which is highly resistant to sulphuric acid of high concentration - exceeding the requirement of standard EN 1175-1 of 1.1 g/cm³ up to tested 1.38 g/cm³. The material makes for the connector's rugged design and suitability for operation with temperatures ranging from -40°C to +110°. This exceeds the usual range of -25° to +90°C significantly.

- **Option for electrolyte circulation systems**
  The charging connectors are also available with the option, as patented by Schaltbau, of an air blow-in system passing through both connector halves. This option makes the connector the first choice for use with batteries featuring a commercial electrolyte circulation system.

- **Integrated interlocking**
  There is an interlocking integrated in the connector that allows easy joining and separating of the halves and ensures its reliability even under shock and vibration.

LV80, LV160, LV320 Series: Named after the nominal load according to the type specification, the connector series exceed it by far. Thus the LV160 Series, for instance, has a maximum amperage of 250 A! This is the result of an innovative contact design. The modular design and intermateability with all commercial connector systems, even with option for electrolyte circulation systems, are further typical features of this connector innovation.

- **DIN compliant keying**
  Couloured keying plugs are used for keying of conventional battery voltages in accordance with DIN 43589-1: Green for dry-cell batteries, grey for wet-cell batteries and yellow (universal) for the vehicle plug prevent mismating of different voltages or battery types.

- **Modular design**
  The small number of individual components and their intermateability with other connector series allows for an individual and cost-effective realisation of your applications and avoids unnecessary stock items.

- **Intermateable with systems of other manufacturers**
  LV Series connectors outperform the requirements of EN 1175-1 in many respects, yet they are intermateable with all commercial charging connectors of other manufacturers - even with option for electrolyte circulation systems.

- **Standards**
  - Charging connector safe from touch and contaminants according to DIN 40050-9
  - Approved to requirements and tests of charging connectors in accordance with EN 1175-1
  - Compliant with IEC 20989
  - Compliant with DIN 43589-1
  - UL-listed: c UL us

SCHALTBAU

Specifications

Series	LV 80	LV160	LV320
Rated operating current *1			
Main contacts	150 A	250 A	400 A*2
Pilot contacts	20 A	20 A	20 A
Rated voltage	150 V	150 V	150 V
Rated operating voltages (for keying) (24 V, 36 V, 48 V, 72 V, 80 V, 96 V)	●	●	●
Main contacts, wire cross-section			
Number of	2	2	2
25 mm² / AWG 3	●	---	---
35 mm² / AWG 2	---	---	---
50 mm² / AWG 1/0	---	●	●
70 mm² / AWG 2/0	---	---	●
95 mm² / AWG 3/0	---	---	●
Main contacts, reducing bushing			
25 / 10 mm² / AWG 3 down to 7	●	---	---
25 / 16 mm² / AWG 3 down to 5	●	---	---
50 / 25 mm² / AWG 1/0 down to 3	---	●	---
50 / 35 mm² / AWG 1/0 down to 2	---	●	●
70 / 50 mm² / AWG 2/0 down to 1/0	---	---	●
Pilot contacts, wire cross-section			
Number of	2	2	2
2.5 mm² / AWG 13	●	●	●
Contact diameter	2.3 mm	4 mm	4 mm
Auxiliary contacts, wire cross-section			
Number of	2	2	2
2.5 mm² / AWG 13	●	●	●
Contact diameter	2.3 mm	2.3 mm	4 mm
Cable connection *3			
Main contacts	w/ crimping	w/ crimping	w/ crimping
Pilot contacts	crimping	crimping	crimping
Degree of protection (IEC 60529)	IP23	IP23	IP23
Temperature range *4 (Observe derating curves)	-40 °C ... +110 °C	-40 °C ... +110 °C	-40 °C ... +110 °C
Number of operating cycles (in accordance with EN 1175-1)	> 5000	> 5000	> 5000
Air blow-in system for electrolyte circulation	●	●	●
Inside diameter of air tube			
6 mm	●	●	●
9 mm	●*5	●	●
10 mm	●*5	●	●
Shells			
PBT GF30 (free of PBB and PBDE)	●	●	●
Integrated interlocking	●	●	●
Strain relief	●	●	●
Shells, flammability rating	UL 94-V0	UL 94-V0	UL 94-V0
Handle, type			
snap-on handle	●	●	●
screw-on handle	●	●	●
Handle, colour			
black / red (for emergency cutout)	● / ●	● / ●	● / ●
Standards			
EN 1175-1	●	●	●
DIN 43 589-1 (except air blow-in system)	●	●	●
DIN 40 050-9	●	●	●
IEC 20989	●	●	●
Approval		c UL us	
Description	pages 6, 7	pages 8, 9	pages 10, 11

*1 *For further information about maximum permissible amperage dependent on wire cross-section, type of conductor, and impulse load, see page 14.*

*2 *400 A with socket contacts featuring a hyperbolic stamped grid as used with LV160 and LV80 Series connectors. Available as of beginning of 2006.*

*3 *For crimping instructions and size of w/ crimping dies, see page 14.*

*4 *Temperature range, derating curves, see page 7 (LV320), page 9 (LV160) and page 11 (LV80) respectively.*

*5 *to be connected by means of extra air tube adapter.*

LV80, LV160, LV320 Ordering code

Stock items

LV Series

Example: **LV80-T-S25-0-0-L0-H1**

Series

LV80	
LV160	
LV320	

Keying plug

T	green, dry-cell battery
N	grey, wet-cell battery
U	yellow (universal), vehicle plug
A	green, grey, yellow*1, to choose from

Main contacts, wire cross-section

	LV320 Series
P95	Pin, 95 mm² / AWG 4/0
P70	Pin, 70 mm² / AWG 3/0
P50	Pin, 50 mm² / AWG 1/0
	LV160 Series
P50	Pin, 50 mm² / AWG 1/0
	LV80 Series
P25	Pin, 25 mm² / AWG 3
	LV320 Series
S95	Socket, 95 mm² / AWG 4/0
S70	Socket, 70 mm² / AWG 3/0
S50	Socket, 50 mm² / AWG 1/0
	LV160 Series
S50	Socket, 50 mm² / AWG 1/0
	LV80 Series
S25	Socket, 25 mm² / AWG 3

Pilot contacts*2

0	none
2	two pilot contacts

Auxiliary contacts

0	none
2	two auxiliary contacts

Air blow-in system*2

L0	none
L1	Air blow-in system for electrolyte circulation

Handle

H0	none
H1	Snap-on handle, black
H2	Snap-on handle, red (for emergency cutout)

*1 *Yellow keying plug only delivered with charging and vehicle plug*
*2 *Please note that there is space only for one adapter in the connector: either the one for the pilot contacts or the one for the connection of the air tube.*

Special variant, online configuring tool

If you need a special variant of the charging connector, please do not hesitate to contact us. Maybe the type of connector you are looking for is among our many special designs. If not, we can also supply customized designs. In this case, however, minimum ordering quantities apply.
Or visit our home page. There is a configuring tool for each series you can use to configure the type of charging connector you really need.

Samples

Order your sample from one of our Schaltbau sales offices in Germany or from one of our international sales partners. You will find our sales offices at:

www.schaltbau-gmbh.de

The tables represent our stock items which can be supplied in short delivery time.

LV320 Series with main contacts 95 mm² / AWG 4/0

Description	Ordering code	Battery type
Battery receptacle	LV320-T-S95-0-0-L0-H1	dry-cell
	LV320-N-S95-0-0-L0-H1	wet-cell
	LV320-N-S95-0-0-L1-H1	wet-cell with ECS*
	LV320-T-S95-0-0-L0-H0	dry-cell
	LV320-N-S95-0-0-L0-H0	wet-cell
	LV320-N-S95-0-0-L1-H0	wet-cell with ECS*
Charging plug	LV320-T-P95-0-0-L0-H0	dry-cell
	LV320-N-P95-0-0-L0-H0	wet-cell
	LV320-N-P95-0-0-L1-H0	wet-cell with ECS*
Vehicle plug	LV320-U-P95-0-0-L0-H0	dry-cell / wet-cell

LV320 Series with main contacts 70 mm² / AWG 3/0

Description	Ordering code	Battery type
Battery receptacle	LV320-T-S70-0-0-L0-H1	dry-cell
	LV320-N-S70-0-0-L0-H1	wet-cell
	LV320-N-S70-0-0-L1-H1	wet-cell with ECS*
	LV320-T-S70-0-0-L0-H0	dry-cell
	LV320-N-S70-0-0-L0-H0	wet-cell
	LV320-N-S70-0-0-L1-H0	wet-cell with ECS*
Charging plug	LV320-T-P70-0-0-L0-H0	dry-cell
	LV320-N-P70-0-0-L0-H0	wet-cell
	LV320-N-P70-0-0-L1-H0	wet-cell with ECS*
Vehicle plug	LV320-U-P70-0-0-L0-H0	dry-cell / wet-cell

LV160 Series with main contacts 50 mm² AWG 1/0

Description	Ordering code	Battery type
Battery receptacle	LV160-T-S50-0-0-L0-H1	dry-cell
	LV160-N-S50-0-0-L0-H1	wet-cell
	LV160-N-S50-0-0-L1-H1	wet-cell with ECS*
	LV160-T-S50-0-0-L0-H0	dry-cell
	LV160-N-S50-0-0-L0-H0	wet-cell
	LV160-N-S50-0-0-L1-H0	wet-cell with ECS*
Charging plug	LV160-T-P50-0-0-L0-H0	dry-cell
	LV160-N-P50-0-0-L0-H0	wet-cell
	LV160-N-P50-0-0-L1-H0	wet-cell with ECS*
Vehicle plug	LV160-U-P50-0-0-L0-H0	dry-cell / wet-cell

LV80 Series with main contacts 25 mm² / AWG 3

Description	Ordering code	Battery type
Battery receptacle	LV80-T-S25-0-0-L0-H1	dry-cell
	LV80-N-S25-0-0-L0-H1	wet-cell
	LV80-N-S25-0-0-L1-H1	wet-cell with ECS*
	LV80-T-S25-0-0-L0-H0	dry-cell
	LV80-N-S25-0-0-L0-H0	wet-cell
	LV80-N-S25-0-0-L1-H0	wet-cell with ECS*
Charging plug	LV80-T-P25-0-0-L0-H0	dry-cell
	LV80-N-P25-0-0-L0-H0	wet-cell
	LV80-N-P25-0-0-L1-H0	wet-cell with ECS*
Vehicle plug	LV80-U-P25-0-0-L0-H0	dry-cell / wet-cell

*ECS for electrolyte circulation system

The complete list of all spare parts and individual components such as reducing bushings, pilot contact sets, and auxiliary contacts you will find on the opposite page.

Cable assembly and accessories

For pre-assembled wires, cable assemblies, tools and mounting accessories please refer to pages 12 and 13.

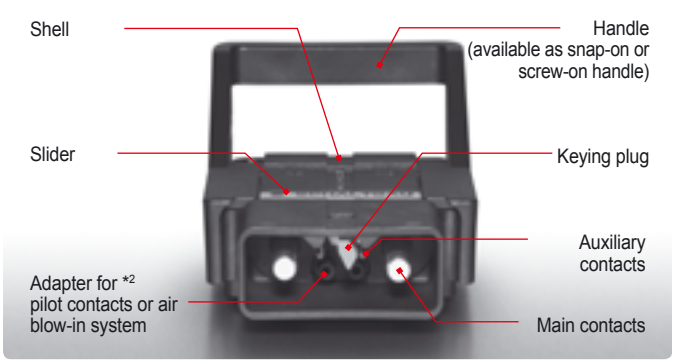

Charging plug or vehicle plug, front view

LV80, LV160, LV320 Individual components, Spare parts

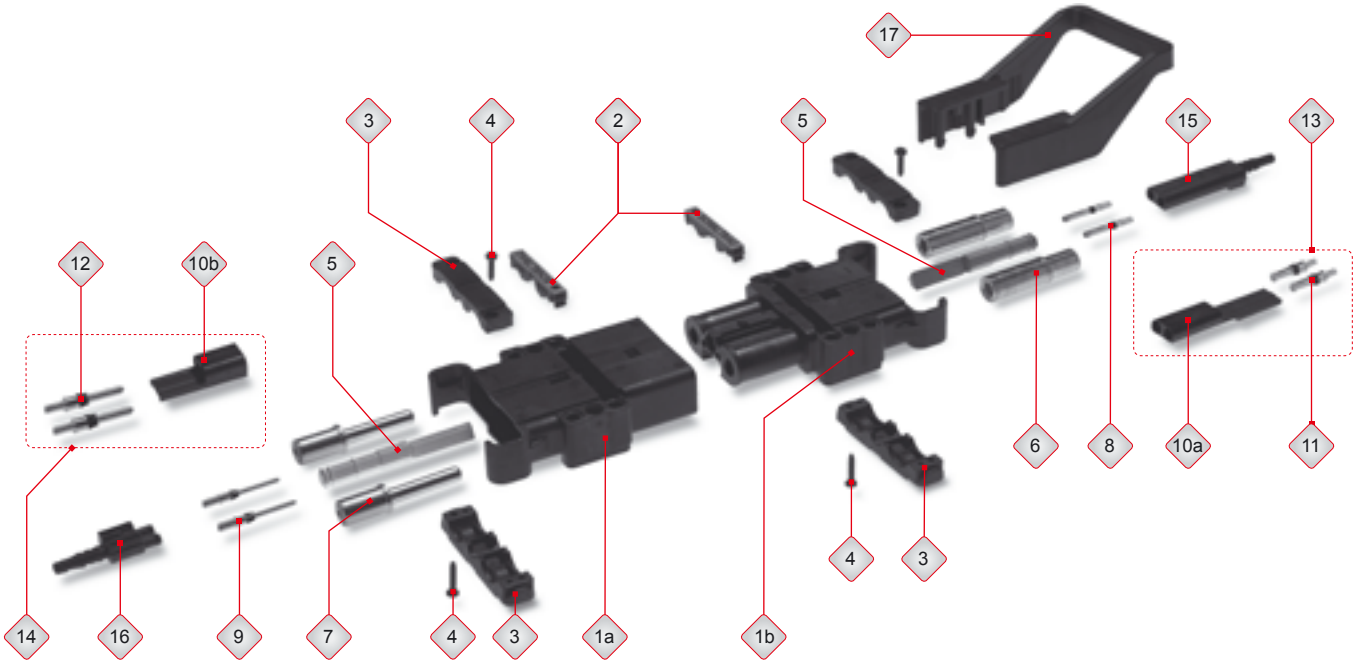

Item	Identification		Ordering code LV80 Series	Ordering code LV160 Series	Ordering code LV320 Series	Explanation
1a 1b	**Plug shell** **Receptacle shell**		LV80 G-P LV80 G-S	LV160 G-P LV160 G-S	LV320 G-P LV320 G-S	Shell to enclose the following individual components
2	**Slider**		LV80 S	LV160 S	LV320 S	interlocks main contacts and keying plug
3	**Clamp**		LV80 D	LV160/320 D		2x for strain relief
4	**Screw for clamp**		SC 3.5x16	SC 3.5x19	SC 3.5x25 *(90mm²)* SC 3.5x19 *(70/50mm²)*	2x self-tapping screw for strain relief clamp, tightening torque 1.5 Nm
5	**Keying plug,**	green grey yellow	LV80 Tgn LV80 Ngr LV80 Uge	LV160/320 Tgn LV160/320 Ngr LV160/320 Uge		for dry-cell batteries for wet-cell batteries universal for vehicle plug
6	**Main contact,** (socket)	95 mm² / AWG 4/0 70 mm² / AWG 3/0 50 mm² / AWG 1/0 25 mm² / AWG 3	--- --- --- LV80 S6/25	--- --- LV160 S8.5/50 ---	LV320 S10/95*³ LV320 S10/70*³ LV320 S10/50*³ ---	2x main contact for battery receptacle *³ *Socket contacts with hyperbolic stamped grid for LV320 Series connectors available as of beginning of 2006.*
7	**Main contact,** (pin)	95 mm² / AWG 4/0 70 mm² / AWG 3/0 50 mm² / AWG 1/0 25 mm² / AWG 3	--- --- --- LV80 P6/25	--- --- LV160 P8.5/50 ---	LV320 P10/95 LV320 P10/70 LV320 P10/50 ---	2x main contact for charging plug or vehicle plug
---	**Reducing bushing,**	70/50 50/35 50/25 25/16 25/10	--- --- --- LV RH25/16 LV RH25/10	--- LV RH50/35 LV RH50/25 --- ---	LV RH70/50 LV RH50/35 --- --- ---	AWG 2/0 down to 1/0 AWG 1/0 down to 2 AWG 1/0 down to 3 AWG 3 down to 5 AWG 3 down to 7
8	**Aux. contact,** (socket)	2.5 mm² / AWG 13	LV80 BBC-2.5-Ag	LV160 BBC-2.5-Ag	LV320 BCC-2.5-Ag	2x auxiliary contact for battery receptacle
9	**Aux. contact,** (pin)	2.5 mm² / AWG 13	LV80 SBC-2.5-Ag	LV160 SBC-2.5-Ag	LV320 SCC-2.5-Ag	2x auxiliary contact for charging plug or vehicle plug
10a 10b	**Adapter for pilot contact** (socket) **Adapter for pilot contact** (pin)		LV80 PA-S LV80 PA-P	LV160/320 PA-S LV160/320 PA-P		Pilot contact adapter for socket contacts Pilot contact adapter for pin contacts
11	**Pilot contact,** (socket)	2.5 mm² / AWG 13	LV80 BBC-2.5-Ag	BCC-2.5-Ag		2x pilot contact for battery receptacle
12	**Pilot contact,** (pin)	2.5 mm² / AWG 13	LV80 SBC-2.5-Ag	SCC-2.5-Ag		2x pilot contact for charging plug or vehicle plug
13	**Pilot contact set** (socket)		LV80 P-S/S	LV160/320 P-S/S		Set, including items 10a, 11
14	**Pilot contact set** (pin)		LV80 P-P/S	LV160/320 P-P/S		Set,including items 10b, 12
15	**Adapter for air blow-in system** (receptacle)		LV80 LV-S	LV160/320 LV-S		for air tube with inside Ø 6 ... 10 mm
16	**Adapter for air blow-in system** (plug)		LV80 LV-P	LV160/320 LV-P		for air tube with inside Ø 6 ... 10 mm
17	**Handle LV,** (snap-on handle)	black red	LV80 H1 LV80 H2	LV160/320 H1 LV160/320 H2		snap-on handle for receptacle or plug shell
---	**Handle LV,** (screw-on handle)	black red	LV80 H1 /S LV80 H2 /S	LV160/320 H1 /S LV160/320 H2 /S		screw-on handle for receptacle or plug shell with screws

LV320 Features

- **Rated operating current:** Main contacts 400 A*
  Pilot/aux. contacts 20 A
- **Rated voltage:** 150 V DC
- **Rugged, fiber glass reinforced shells:**
  - Resistant to 1.38 g/cm³ sulphuric acid
  - Temperature range -40°C ... +110°C
  - Resistant to shock and vibration due to interlocking
  - Intermateable with connectors of other manufacturers
- **DIN compliant keying (DIN EN 1175-1):**
  - Voltage keying: 24 / 36 / 48 / 72 / 80 / 96 V DC
  - Different keying plugs for dry-cell and wet-cell batteries
  - Universal keying plug for vehicle plug
- **Contacts:**
  - Socket contacts featuring hyperbolic stamped grid made of BeCu for increased amperage; pin contacts: cold-heading die (E-Cu), silver plated; w/ crimping
  - Can be retrofitted with 2 pilot and/or auxiliary contacts max., solid, turned, silver plated; crimping

LV320 Series: Charging connector with option for electrolyte circulation

Dimension diagrams

- **Charging plug / vehicle plug** with snap-on handle

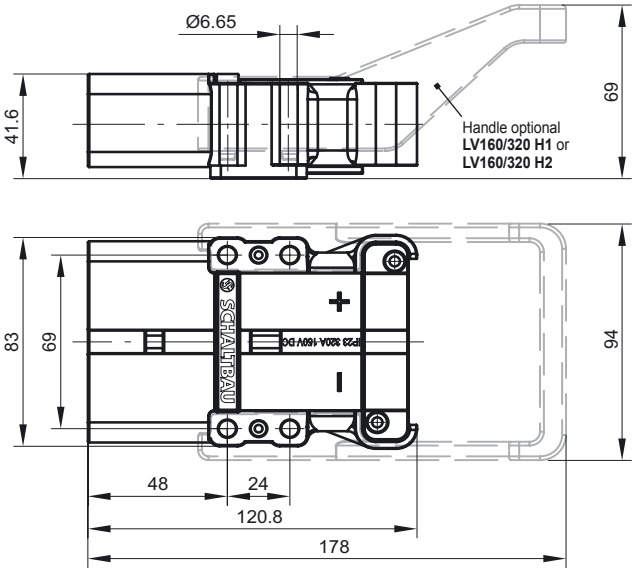

- **Charging plug / vehicle plug** with screw-on handle

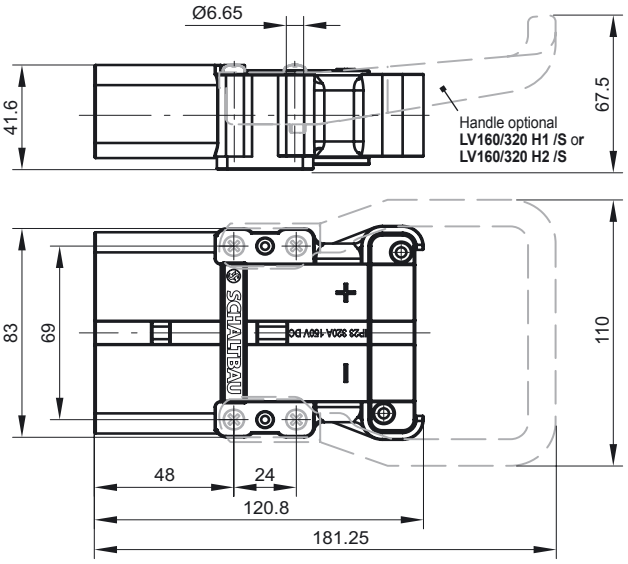

- **Battery receptacle** with snap-on handle

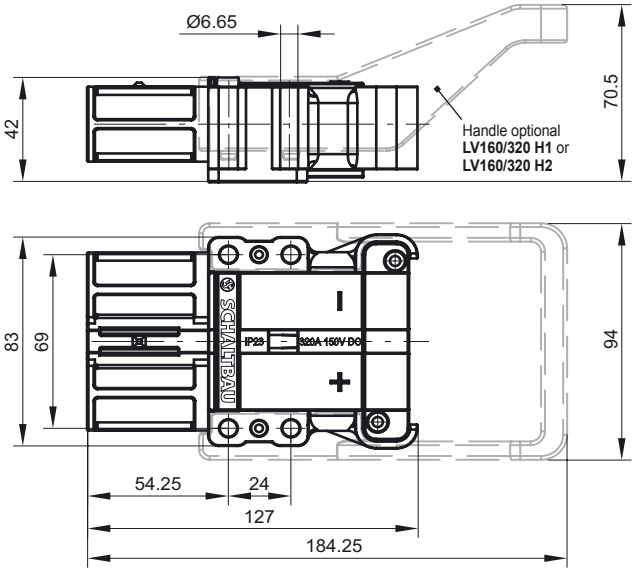

- **Battery receptacle** with screw-on handle

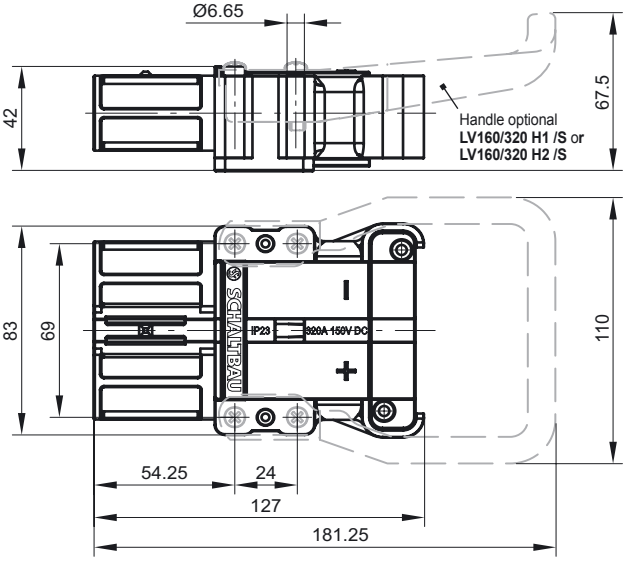

LV320 P10/xx, LV320 S10/xx* Main contacts, reducing bushings

- **Main contacts** for charging plug / vehicle plug

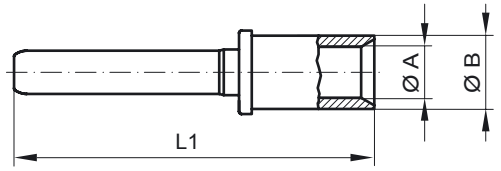

Ordering code	Wire cross-section	L1	ØA	ØB
LV320 P10/95	95 mm² / AWG 3/0	98.2	14.0	19.0
LV320 P10/70	70 mm² / AWG 2/0	70.5	12.5	16.9
LV320 P10/50	50 mm² / AWG 1/0	70.5	10.5	14.4

- **Main contacts** for battery receptacle*

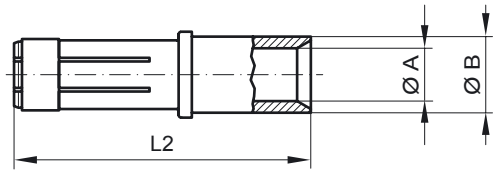

Ordering code	Wire cross-section	L2	ØA	ØB
LV320 S10/95	95 mm² / AWG 3/0	85.0	14.5	19.8
LB320L S10/70	70 mm² / AWG 2/0	56.5	12.5	16.9
LB320L S10/50	50 mm² / AWG 1/0	56.6	10.5	14.4

- **Reducing bushings** for main contacts

For connecting wires with smaller cross-sections reducing bushings are available reducing AWG 2/0 down to 1/0 and AWG 1/0 down to 2.

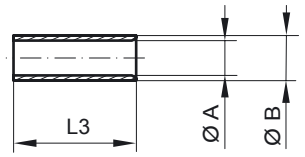

Ordering code	Rated operating current with reducing bushing	L3	ØA	ØB
LV RH-70/50	200 A	19	12.2	10.5
LV RH-50/35	160 A	19	10.3	8.5

Note: The use of reducing bushings has no bearing on the derating and maximum current carrying capacity curves.

Maximum current carrying capacity curves LV320*

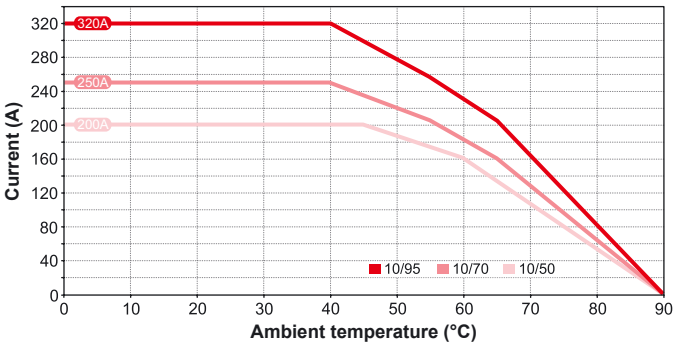

Derating curves LV320*
(according to IEC 60512-3, test 5b)

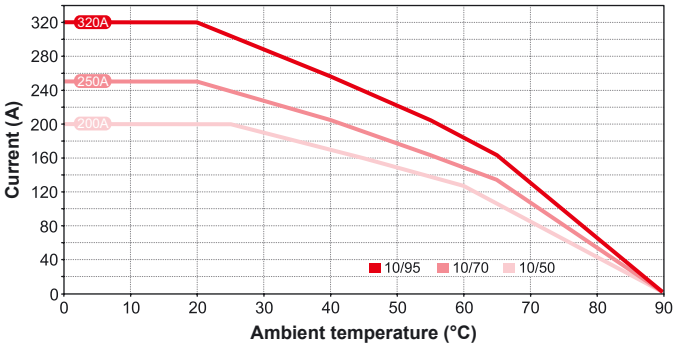

Please refer to the crimping and assembly instructions on ***page 14.*** *The values shown in the diagram of the maximum current carrying capacity are only valid for w/ crimping.* ***W/ crimping is required for our main contacts.***

** 400 A with socket contacts featuring a hyperbolic stamped grid as used with LV160 and LV80 Series connectors. Available as of beginning of 2006. Ordering code then:*

Main contacts for battery receptacles

Ordering code	*Wire cross-section*	*L2*	*ØA*	*ØB*
LV320 S10/95	*95 mm² / AWG 3/0*	*85.0*	*14.0*	*19.0*
LV320 S10/70	*70 mm² / AWG 2/0*	*59.0*	*12.5*	*16.9*
LV320 S10/50	*50 mm² / AWG 1/0*	*59.0*	*10.5*	*14.4*

Reduced scale diagrams / dimensions in mm

LV160 Features

- **Rated operating current:** Main contacts 250 A; Pilot/aux. contacts 20 A
- **Rated voltage:** 150 V DC
- **Rugged, fiber glass reinforced shells:**
  - Resistant to 1.38 g/cm³ sulphuric acid
  - Temperature range -40°C ... +110°C
  - Resistant to shock and vibration due to interlocking
  - Intermateable with connectors of other manufacturers
- **DIN compliant keying (DIN EN 1175-1):**
  - Voltage keying: 24 / 36 / 48 / 72 / 80 / 96 V DC
  - Different keying plugs for dry-cell and wet-cell batteries
  - Universal keying plug for vehicle plug
- **Contacts:**
  - Socket contacts featuring hyperbolic stamped grid made of BeCu for increased amperage; pin contacts: cold-heading die (E-Cu), silver plated; w/ crimping
  - Can be retrofitted with 2 pilot and/or auxiliary contacts max., solid, turned, silver plated; crimping

LV160 Series: Charging connector with option for electrolyte circulation

Dimension diagrams

- **Charging plug, vehicle plug** with snap-on handle

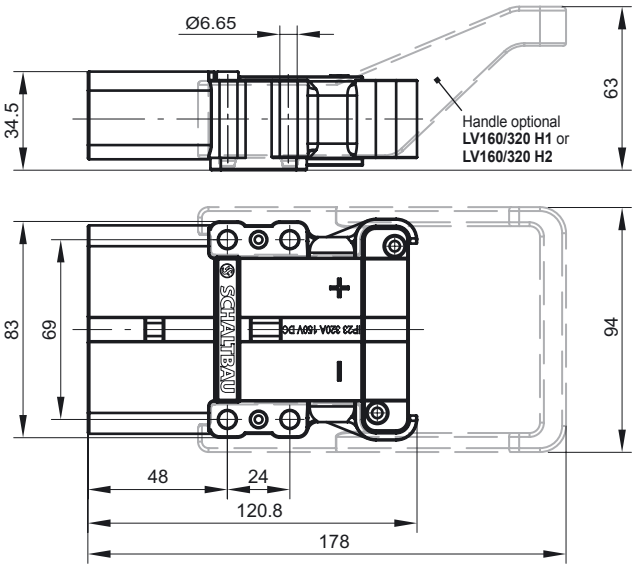

- **Charging plug, vehicle plug** with screw-on handle

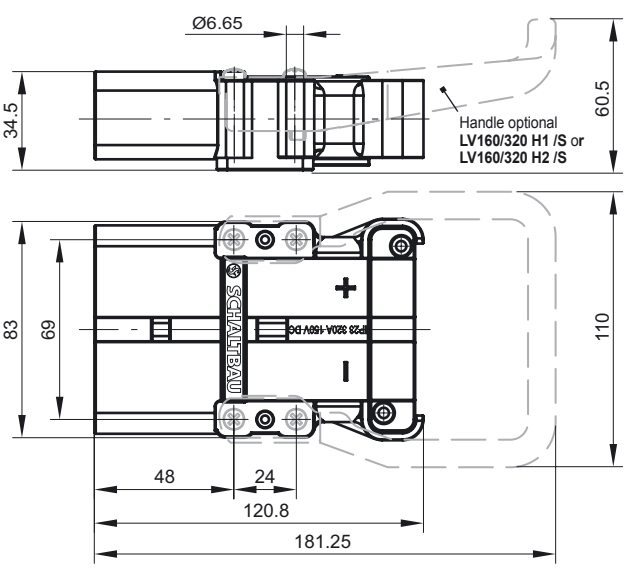

- **Battery receptacle** with snap-on handle

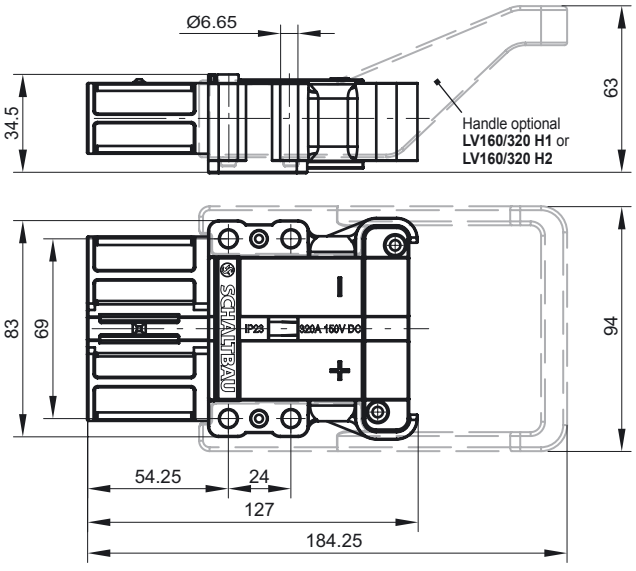

- **Battery receptacle** with screw-on handle

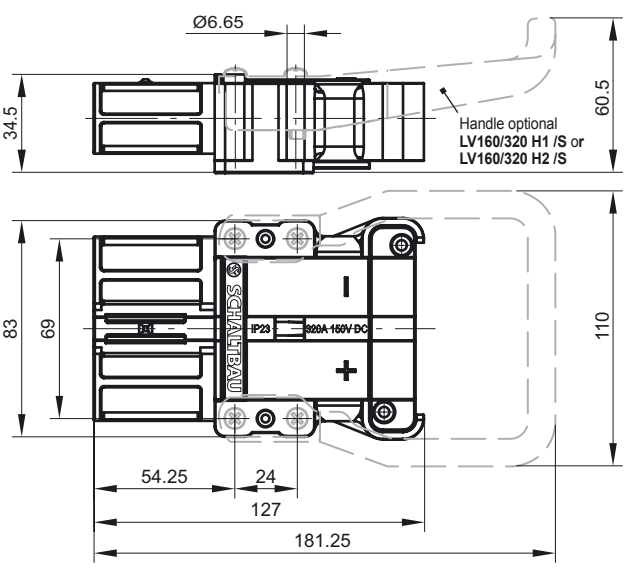

LV160 P8.5/50, LV160 S8.5/50 Main contacts, reducing bushings

- **Main contacts** for charging plug / vehicle plug

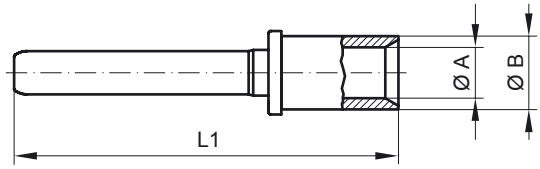

Ordering code	Wire cross-section	L1	ØA	ØB
LV160 P8.5/50	50 mm² / AWG 1/0	64.0	10.5	14.4

- **Main contacts** for battery receptacle

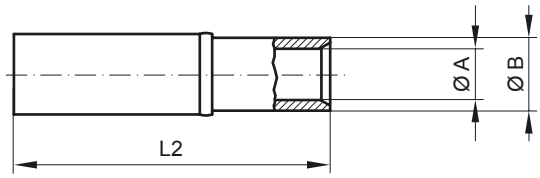

Ordering code	Wire cross-section	L2	ØA	ØB
LV160 S8.5/50	50 mm² / AWG 1/0	59.2	10.5	14.4

- **Reducing bushings** for main contacts

For connecting wires with smaller cross-sections reducing bushings are available reducing AWG 1/0 down to 2 and AWG 1/0 down to 3.

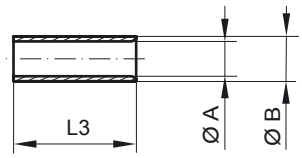

Ordering code	Rated operating current with reducing bushing	L3	ØA	ØB
LV RH-50/35	200 A	19	8.5	10.3
LV RH-50/25	150 A	19	8.0	10.3

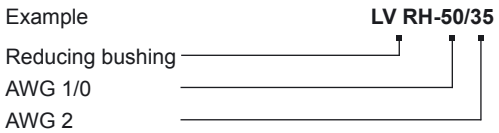

Note: The use of reducing bushings has no bearing on the derating and maximum current carrying capacity curves.

Maximum current carrying capacity curves LV160*

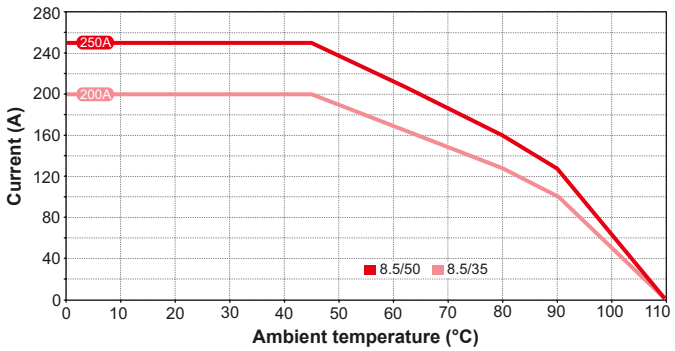

Derating curves LV160*
(according to IEC 60512-3, test 5b)

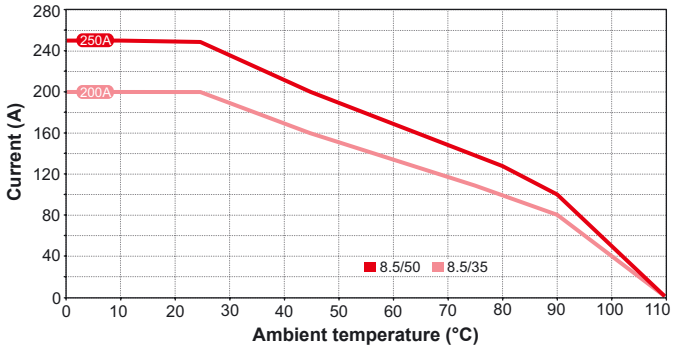

Please refer to the crimping and assembly instructions on ***page 14.*** *The values shown in the diagram of the maximum current carrying capacity are only valid for w/ crimping.* ***W/ crimping is required for our main contacts.***

Reduced scale diagrams / dimensions in mm

LV80 Features

LV80 Series

- **Rated operating current:** Main contacts 150 A; Pilot/aux. contacts 20 A
- **Rated voltage:** 150 V DC
- **Rugged, fiber glass reinforced shells:**
  - Resistant to 1.38 g/cm³ sulphuric acid
  - Temperature range -40°C ... +110°C
  - Resistant to shock and vibration due to interlocking
  - Intermateable with connectors of other manufacturers
- **DIN compliant keying (DIN EN 1175-1):**
  - Voltage keying: 24 / 36 / 48 / 72 / 80 / 96 V DC
  - Different keying plugs for dry-cell and wet-cell batteries
  - Universal keying plug for vehicle plug
- **Contacts:**
  - Socket contacts featuring hyperbolic stamped grid made of BeCu for increased amperage; pin contacts: cold-heading die (E-Cu), silver plated; w/ crimping
  - Can be retrofitted with 2 pilot and/or auxiliary contacts max., solid, turned, silver plated; crimping

LV80 Series: Charging connector with adapter for pilot contacts

Dimension diagrams

Baureihe LV80

- **Charging plug, vehicle plug** with snap-on handle

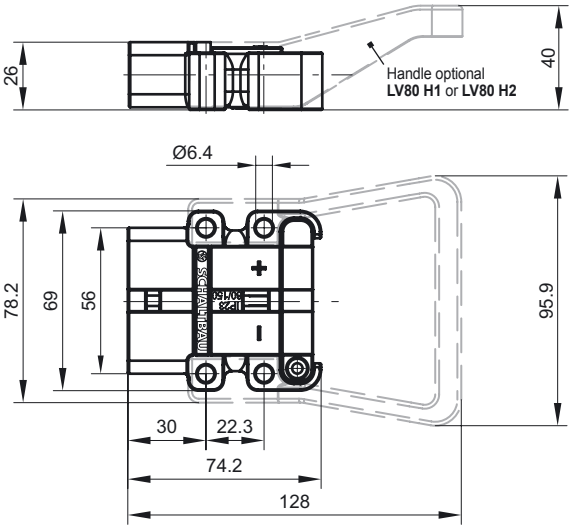

- **Charging plug, vehicle plug** with screw-on handle

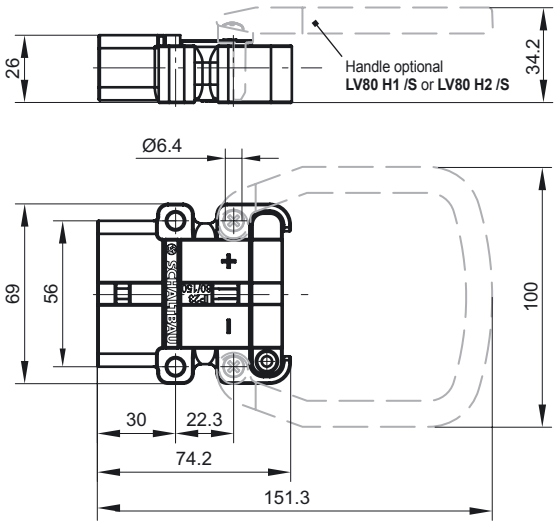

- **Battery receptacle** with snap-on handle

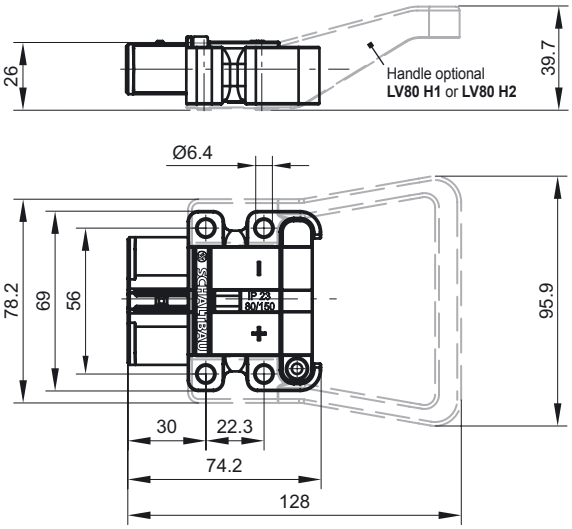

- **Battery receptacle** with screw-on handle

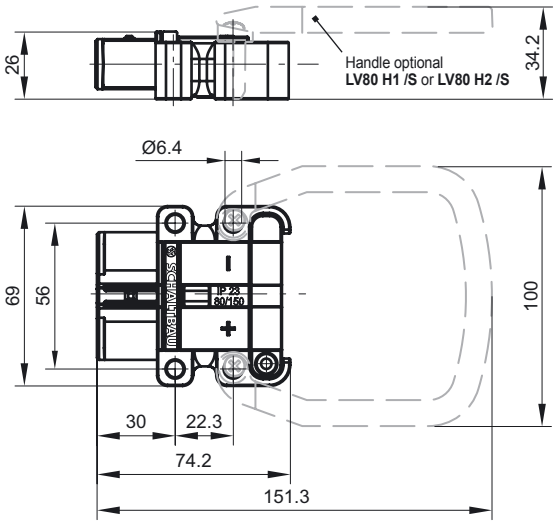

LV80 P6/25, LV80 S6/25 Main contacts, reducing bushings

- **Main contacts** for charging plug / vehicle plug

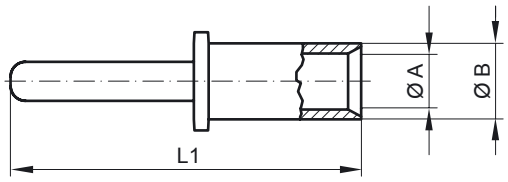

Ordering code	Wire cross-section	L1	ØA	ØB
LV80 P6/25	25 mm² / AWG 3	46.3	8	11

- **Main contacts** for battery receptacle

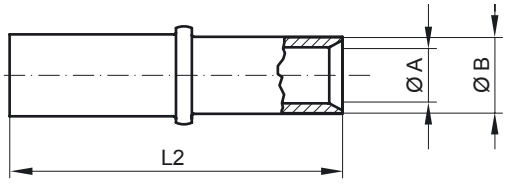

Ordering code	Wire cross-section	L1	ØA	ØB
LV800 S6/25	25 mm² / AWG 3	44	8	11

- **Reducing bushings** for main contacts

For connecting wires with smaller cross-sections reducing bushings are available reducing AWG 3 down to 5 and AWG 3 down to 7.

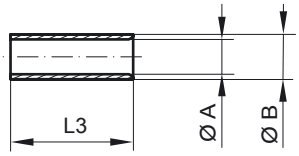

Ordering code	Rated operating current with reducing bushing	L3	ØA	ØB
LV RH-25/16	125 A	15	6.0	7.8
LV RH-25/10	80 A	15	4.5	7.8

Example: **LV RH-25/16**

Reducing bushing
AWG 3
AWG 5

Note: The use of reducing bushings has no bearing on the derating and maximum current carrying capacity curves.

Maximum current carrying capacity curves LV80

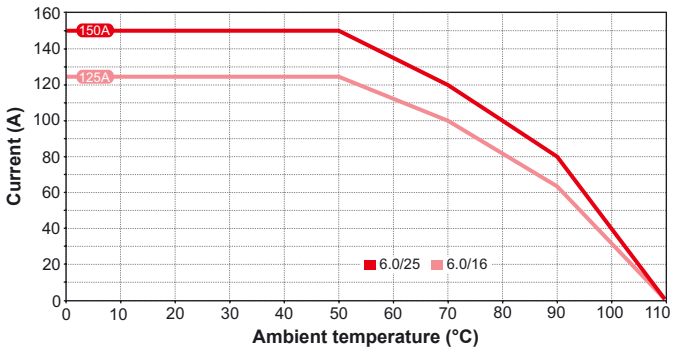

Derating curves LV80
(according to IEC 60512-3, test 5b)

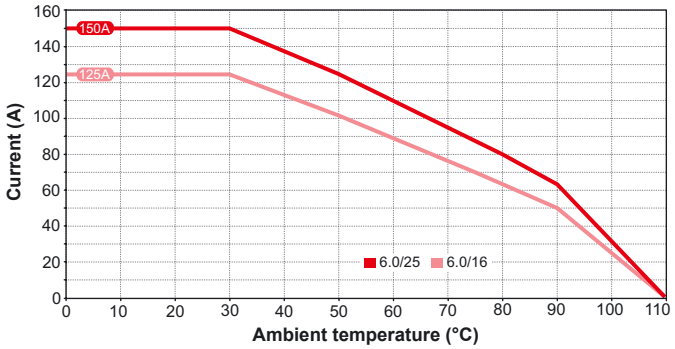

Please refer to the crimping and assembly instructions on ***page 14.*** *The values shown in the diagram of the maximum current carrying capacity are only valid for w/ crimping.* ***W/ crimping is required for our main contacts.***

Reduced scale diagrams / dimensions in mm

Pre-assembled cables

LV Series

Do you need assembled connectors?

If so, do not hesitate to contact us! On request we supply receptacles and plugs assembled complete with cables of different lengths and cross-sections, and with a variety of cable terminal ends for the battery to suit your requirements. Schaltbau guarantees a constant high quality of the assembled connector.

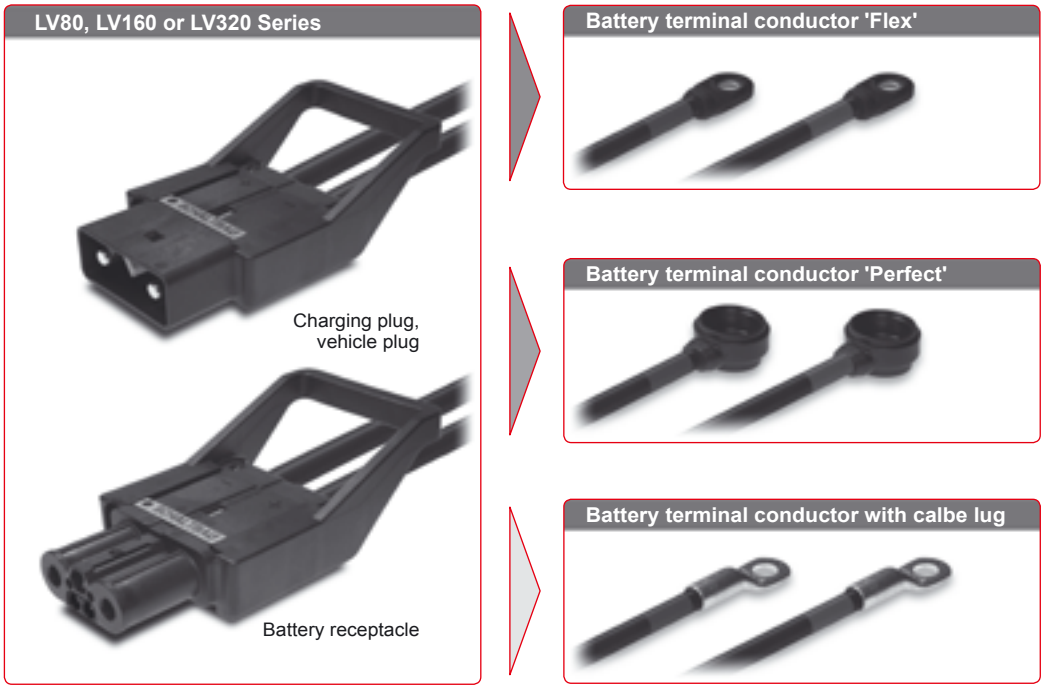

Pre-assembled cables: Schaltbau supplies pre-assembled battery terminal conductors of different lengths and cross-sections to meet your requirements.

Features Pre-assembled cables

LV Series

Stock item cables and battery terminal conductors:

- Welding cables according to DIN VDE 0295, e.g. H01 N2-D and H07-V
- Frötek „Perfect“ battery terminal conductor
- Frötek „Flex“ battery terminal conductor

Wire cross-section:

- 10 ... 95mm² / AWG 7 ... 3/0

Connection:

- Main contacts: w/ crimping
- Pilot /aux. contacts crimping

Strain relief:

- All cables are secured against stress and strain by the strain relief clamp integrated in the plug and receptacle shell of the connector.

Marking of cables:

- Red shrink tube ⊕-terminal
- Blue shrink tube ⊖-terminal
- Product named on rubber jacket of cable

Quality assurance:

- DIN EN ISO 9001:2000
- EN ISO 14001:1996

Minimum ordering quantities:

- A minimum quantity of 50 applies for orders directly from Schaltbau.
- For orders below that minimum quantity we can recommend an authorized manufacturing and sales partner in your vicinity.

Stocko WHPH 10 Crimp tool for main contacts

The applicable standard for crimping of main contacts is IEC 60352-2 – Solderless crimped connections - General requirements, test methods and practical guidance. Schaltbau requires w/ crimping of the main contacts.

Crimp tool WHPH 10:
For that purpose Schaltbau recommends the use of hand tool WHPH 10 and for major quantities the hydraulic crimping heads WHK 8S, WHK 8 or WHK 9 respectively of the company Stocko (or comparable tools of other manufacturers).

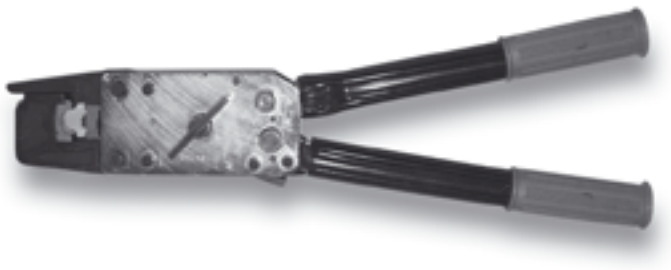

Crimp tool Stocko WHPH 10 **1*
for the main contacts

CWZ-600 Crimp tool 0.14 ... 6.00 mm² (AWG 26 ... 9) for pilot and auxiliary contacts

The applicable standard for crimping the main contacts is IEC 60352-2 – Solderless crimped connections - General requirements, test methods and practical guidance.

Crimp tool CWZ-600:
Schaltbau recommends the use of crimp tool CWZ-600. Crimping of the pilot contacts is done by means of a set of dies for wire gauge AWG 13 (2.5 mm²). For that purpose, slide crimp ferrule of contact (pin or socket) over the stripped wire until it shows in the inspection hole. Feed the contact with the inserted wire in the crimp tool as far as it will go. Close the tool handles beyond the lock-in position.

Crimp tool CWZ-600 **1*
for both pilot and auxiliary contacts

AWZ-C/H Extraction tools for pilot and auxiliary contacts

The table below lists the extraction tools according to contact type and connector series.

Series	Type of contact		Extraction tool
LV80	Pilot contacts	**LV80 BBC-2,5-Ag** **LV80 SBC-2,5-Ag**	LV80 AWZ-B
	Aux. contacts	**LV80 BBC-2,5-Ag** **LV80 SBC-2,5-Ag**	
LV160	Pilot contacts	**BCC-2,5-Ag** **SCC-2,5-Ag**	AWZ-C/H
	Aux. contacts	**LV160 BBC-2,5-Ag** **LV160 SBC-2,5-Ag**	LV160 AWZ-B
LV320	Pilot contacts	**BCC-2,5-Ag** **SCC-2,5-Ag**	AWZ-C/H
	Aux. contacts	**LV320 BCC-2,5-Ag** **LV320 SCC-2,5-Ag**	--- **2*

**2 LV320 Series auxiliary contacts are secured from falling out of the shell by means of the slider.*

Extraction tool AWZ-C/H **1*
for pilot contacts LV160, LV320

Extraction tool LV160 AWZ-B **1*
for auxiliary contacts

Extraction tool LV80 AWZ-B **1*
for pilot and auxiliary contacts

**1 Reduced scale representation*

Main contacts Crimping instructions

LV Series

Applicable standard
The applicable standard for crimping of the main contacts is IEC 60352-2 – Solderless crimped connections.

Contact resistance
With w/ crimping, done according to the rules, contact resistance of crimped contact in new condition ranges between 10 and 20 µΩ.

Permissible conventional thermal current
Only rubber insulated conductors may be used (harmonized welding cables with rubber jackets according to DIN VDE 0282-6, e.g. H01N2-D). In accordance with DIN VDE 0117-5.10.2 these conductors may carry currents of 1.21-fold or 1.37-fold maximum capacity.

Crimping of main contacts
Only w/ crimping ensures a sufficient deformation. W/ crimping causes only low oxidation during operation and results in permanently low contact resistance and, for this reason, a low self-heating of crimped contacts carrying high currents.

Crimp tools and size of dies
Schaltbau recommends the use of the hand tool WHPH 10 and for major quantities the hydraulic crimping heads WHK 8S, WHK 8 or WHK 9 respectively of the company Stocko (or comparable tools of other manufacturers). For the right size of dies please refer to the opposite table.

Temperature range, derating curves
Temperature ranges between -40°C and +110°C in consideration of the max. current carrying capacity curves (base curve) and the revised max. current carrying capacity curves of the continuous operating range, the derating curves according to IEC 60512-3, test 5b. The derating curve with correction factor 0.8 $I_{n\ (base\ curve)}$ is, therefore, valid for currents which may continuously and not intermittently flow through the main contacts of the charging connector, with pilot contacts simultaneously carrying currents of 20 A, without exceeding the upper limiting temperature of +110°C.

Size of dies (Stocko WHPH 10, WHK 6, WHK 9) for w/ crimping

Wire cross-section	AWG	Reducing bushing	Size of dies with # embossed in	
			Anvil	Indentor
10 mm²	8	LV RH25/10	25	25-35
16 mm²	6	LV RH25/16	25	25-35
25 mm²	4	---	25	25-35
		LV RH50/25	50	50-70
35 mm²	2	---	35	25-35
		LV RH50/35	50	50-70
50 mm²	1	---	50	50-70
		LV RH70/50	70	50-70
70 mm²	2/0	---	70	50-70
95 mm²	3/0	---	95	95-150

Pilot and auxiliary contacts Crimping instructions

LV Series

Applicable standard
The applicable standard for crimping the pilot and auxiliary contacts is IEC 60352-2 – Solderless crimped connections - General requirements, test methods and practical guidance.

Crimp tool
Schaltbau recommends the use of crimp tool CWZ-600. (See also previous page)

Crimping of pilot and auxiliary contacts
Crimping of pilot and auxiliary contacts is done by means of a set of dies for wire gauge AWG 13 (2.5 mm²). For that purpose, slide crimp ferrule of contact (pin or socket) over the stripped wire until it shows in the inspection hole. Feed the contact with the inserted wire in the crimp tool as far as it will go. Close the tool handles beyond the lock-in position.

Maximum current carrying capacity dependent on wire gauge

LV Series

The following table informs about the maximum current carrying capacity dependent on wire gauge. Main contacts must be w/ crimped. In addition to that, please strictly observe the maximum current carrying capacity and derating curves of the respective charging connector.

Wire cross-section	Reducing bushing	LV80	LV160	LV320
95 mm² / AWG 3/0	---			400 A*
70 mm² / AWG 2/0	---			320 A
50 mm² / AWG 1/0	**LV RH70/50** used with LV320		250 A	250 A
35 mm² / AWG 2	**LV RH50/35** used with LV160		200 A	
25 mm² / AWG 3	**LV RH50/25** used with LV160	150 A	150 A	
16 mm² / AWG 5	**LV RH25/16** used with LV80	125 A		
10 mm² / AWG 7	**LV RH25/10** used with LV80	80 A		

** 400 A with socket contacts featuring a hyperbolic stamped grid as used with LV160 and LV80 Series connectors. Available as of beginning of 2006.*

Assembly instructions

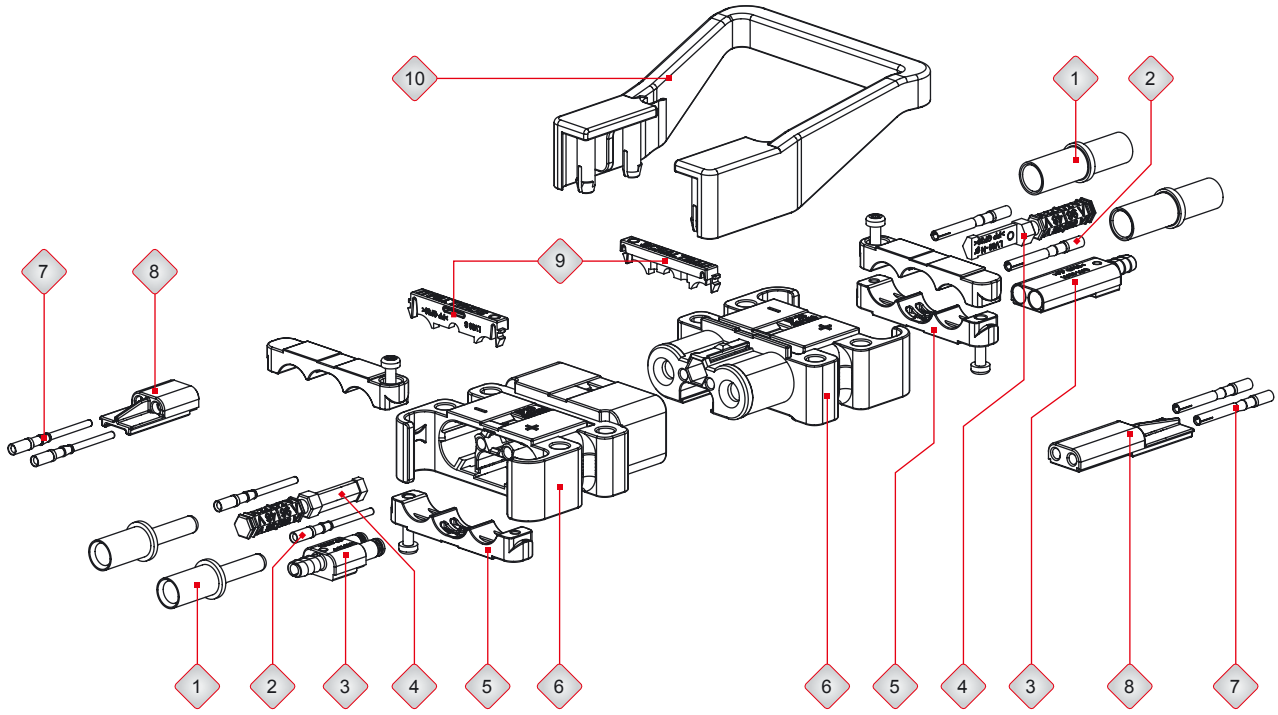

Assembly of main contacts:
Use the recommended tools to crimp main contacts (item 1) to welding cables. Important: Please observe information for proper crimping as mentioned in our master catalogue. See also page 12. Mark ⊕ and ⊖ cable terminal end by using red and blue shrink tube respectively.

Insert main contacts (item 1) including crimped cables into contact cavities (item 6) of the shell as far as it will go.
Note: Mind polarity marking for ⊕ and ⊖ cable on plug and receptacle shell (item 6).

Assembly of pilot/auxiliary contacts:
Use the tools as recommended by Schaltbau to crimp pilot contacts (item 7) and auxiliary contacts (item 2) respectively to signal cables. See also page 12.
Insert auxiliary contacts (item 2) including crimped cables into the contact cavities of the shell (item 6) until locked in place, so they cannot be pulled out.
Note concerning LV320: Here the auxiliary contacts are secured from falling out of the shell by means of the slider (item 9).

Adapter for pilot contacts and air blow-in system resp.:

Assembly of pilot contact adapter:
Insert pilot contacts (item 7) including crimped cables into adapter for pilot contacts (item 8) until locked in place, so they cannot be pulled out.
After that insert pilot contact adapter (item 8) into the shell (item 6) until locked in place, so the adapter cannot be pulled out.

Assembly of air tube adapter:
Mount air tube (inside diameter 6 mm to 10 mm max.) onto adapter (item 3) as far as possible.
Insert air tube adapter into the shell (item 6) until locked in place, so it cannot be pulled out.

Assembly of keying plug:
Insert keying plug for voltage keying (item 4) from front to back into plug/receptacle shell (item 6) until locked in place, so the nominal voltage of the battery shows in the inspection hole.

Important note: Keying plugs for charging plug and vehicle plug respectively must show the same voltage keying as the battery receptacle.

Caution! Worn or damaged keying plugs in the mating area must be replaced.

Assembly of shell:
Insert slider (item 9) for arresting the main contacts into shell (item 6) until locked in place.
Note: Slightly pull at welding cables to check whether the main contacts rest in place.

After the assembly of the main contacts, we recommend mating of the connector halves before tightening the strain relief screws. This ensures an ideal concentricity of the main contacts. See also page 16.

Screw-connect the upper and lower halves of the strain relief clamp (item 5), so that the cables are best protected against stress and strain. Tightening torque 1.5 Nm.
Use appropriate crosstip screwdriver. Cable diameter may be between 20 mm max. and 8 mm min. - the draw-off force 200 N per cable.

Use cable ties for strain relief to fix cables of pilot/auxiliary contacts to main cables. The same can be done with the air tube as used with options for electrolyte circulation systems.

Snap-on handle: Place handle (item 10) over provided mounting holes and snap it on until locked in place. LV160 and LV320 snap-on handles can be additionally fixed by means of two extra screws.

Screw-on handle: Alternatively, screw-on handles are also availabe. The tightening torque for screws is 1.5 Nm. Use appropriate crosstip screwdriver.

Assembly details

LV Series

Mating and unmating forces

In order to ensure easy engaging and disconnecting the mating and unmating forces should remain within normal range (150 N max.).

Note: To minimize torsion forces in the cable:

- adjust both main contacts evenly in the shell (see left-hand diagram)
- align crimp points in parallel to bearing surface of cable lug; this is particularly important in case of short cables where there is not much room for manoeuvre (see right-hand diagram).

By observing the instructions mentioned above optimal mating and unmating forces can be achieved.

Shell-side assembly of main contacts

After the assembly of the main contacts, we recommend mating of the connector halves before tightening the strain relief screws. This ensures an ideal concentricity of the main contacts. See also page 15.

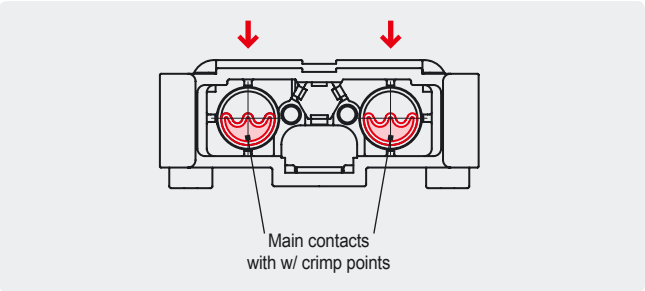

Even adjustment of main contacts in plug/receptacle shell improves mating and unmating forces

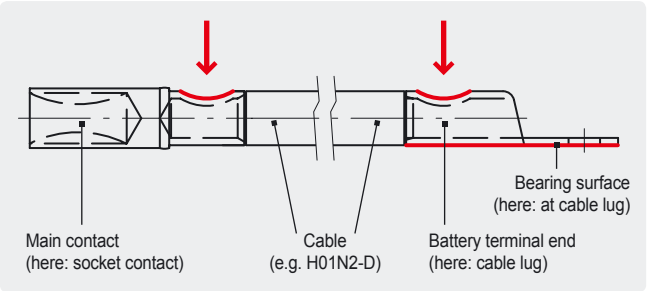

Parallel alignment of crimp points of main contacts and cable lugs to bearing surface

Mounting of plug or receptacle shell

For mounting the plug or receptacle shell onto materials handling vehicles or equipment use M6 screws with Ø 6.4 mm washers (according to DIN 134).

Safety instructions

LV Series

Disconnecting when live or under load

When unmating the connector when live or under load, an arc is generated. That is why disconnecting under load is prohibited in the neighbourhood of explosives and other ignition sources.

Visual inspections

Be sure to make visual inspections regularly.

Improper handling of the connector, e.g. when hitting the floor with some impact, can result in breakage, visible cracks and deformation.

Defective parts must be replaced instantaneously!

LV320 Series: Inverse-polarity protection

In order to guarantee inverse-polarity protection the LV320 Series must always be equipped with an adapter for pilot contacts or the air blow-in system when intended for mating with standard connectors of other manufacturers.

Schaltbau, therefore, delivers LV320 Series stock items (see page 4) generally with pre-assembled adapter!

Keying

LV Series

DIN compliant keying

Schaltbau charging connectors feature DIN compliant keying according to DIN43589-1. Keying plugs of different colours with markings of six different standard battery voltages from 24 V to 96 V prevent mating with the wrong voltage or battery type.

Types of keying

- **Application keying:**
  This type of keying only allows for mating of connector halves for the same battery type. Thus a battery receptacle for dry-cell batteries is only intermateable with the plug of the charging station for dry-cell batteries.
- **Voltage keying:**
  There are six standard battery voltages to choose from: 24, 36, 48, 72, 80, 96 V. The voltages are marked on the sides of the hexagonal keying plug. The keyed voltage shows in the inspection hole of the plug and receptacle shell.

LV Series: Keying plugs for wet-cell battery / charging station (grey), vehicle plug (yellow), and dry-cell battery / charging station (green)

Application keying for 24 V rated operating voltage

Keying receptacle shell
Battery

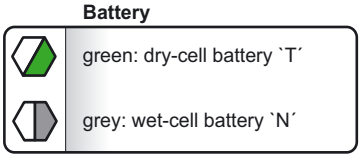

Keying plug shell
Charging station

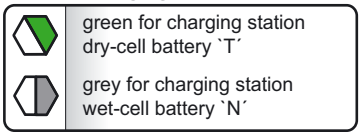

Keying plug shell
Materials handling vehicle

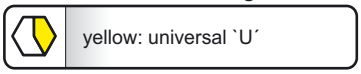

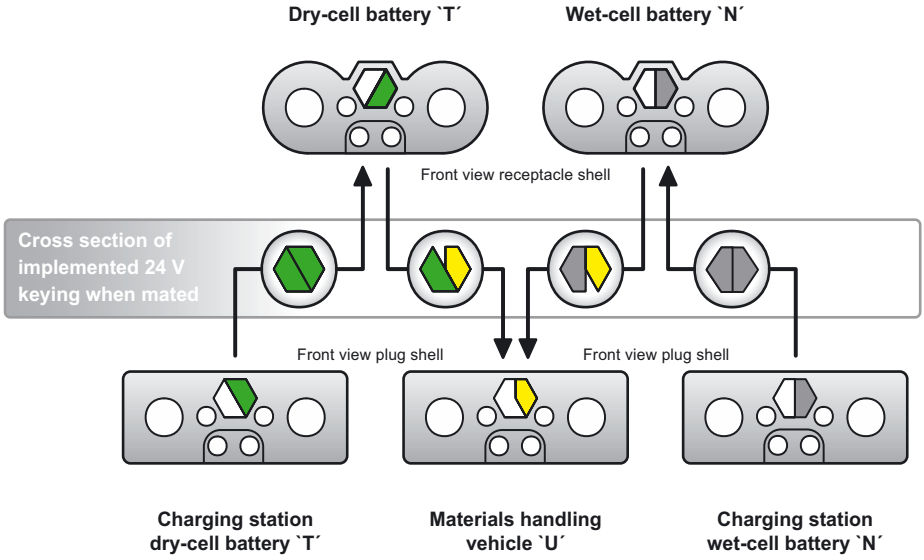

Voltage keying

LV80, LV160 or LV320 Series			Voltage keying	Implemented in		Application keying Keying plug for
Pin	Socket	Application keying		Receptacle shell	Plug shell	
LV80 Ngr, LV160/320 Ngr		N ←		•	•	**Plug shell** Charging station wet-cell battery «N» **Battery receptacle** Wet-cell battery «N»
LV80 Tgn, LV160/320 Tgn		T ←		•	•	**Plug shell** Charging station dry-cell battery «T» **Battery receptacle** Dry-cell battery «T»
LV80 Uge, LV160/320 Uge		U ←		---	•	**Plug shell** Vehicle plug (universal) «U» **Battery receptacle** ---

RoHS 2002/95/EC

Schaltbau GmbH manufactures in compliance with RoHS. The LV Series connectors are RoHS compliant.

Certified ISO 14001 by BVQI

Schaltbau GmbH has an environment management system that has been certified since 2002.

Certified ISO 9001 by BVQI

Schaltbau GmbH has a quality management system that has been certified since 1994.

Electrical Components and Systems for Railway Engineering and Industrial Applications

Connectors	• Connectors manufactured to industry standards • Connectors to suit the special requirements of communications engineering (MIL connectors) • Charging connectors for battery-powered machines and systems • Connectors for railway engineering, including UIC connectors • Special connectors to suit customer requirements
Snap-action switches	• Snap-action switches with positive opening operation • Snap-action switches with self-cleaning contacts • Enabling switches • Special switches to suit customer requirements
Contactors	• Single and multi-pole DC contactors • High-voltage AC/DC contactors • Contactors for battery powered vehicles and power supplies • Contactors for railway applications • Terminal bolts and fuse holders • DC emergency stop switches • Special contactors to suit customer requirements
Control devices	• Master controllers and reversers for railway applications • Toggle switch devices • Handles and foot switches for railway applications (dead-man equipment) • Switching elements with high breaking capacity • Emergency brake handles • Signal devices
Transportation system equipment	• Power supplies for passenger coaches (electric equipment) • Battery chargers for locomotives and passenger coaches • High-voltage equipment for single and multi-phase operation • Heating devices and heating controls • Design and engineering services for high-voltage equipment • Special equipment to suit customer requirements

Schaltbau GmbH
Klausenburger Strasse 6
81677 Munich
Germany

Phone +49 89 9 30 05-0
Fax +49 89 9 30 05-350
e-Mail contact@schaltbau.de
Internet www.schaltbau.com

with compliments:

We reserve the right to make technical alterations without prior notice.
For updated product information visit www.schaltbau-gmbh.com

A1824/0608/0.5 Printed in Germany
Issued August 2006